15,000 PSI
1,034 BAR
Product Catalog

Jetstream®

Subsidiary of Federal Signal Corporation

The Worldwide Leader in TOTAL Solutions for Challenging Waterblasting Applications

Jetstream of Houston is a leading supplier of innovative Waterblasting solutions for a wide range of applications including – industrial cleaning, surface preparation, hydro-demolition and abrasive waterjet cutting.

Jetstream is committed to providing customers with safe, sure, simple solutions in everything we do. Our total waterblasting solutions include:

- Manufacture and distribution of quality industrial high-pressure Waterblasting units, pumps, parts and accessories; that are all built to last and easy to maintain
- Leading the way with an approved Visual Safety System (VSS) color coding on most Waterblasting components for safer operation within each pressure range
- Providing a wide range of application appropriate automation tools – for safe, hands-free cleaning
- Sharing Application Expertise with customers for the best total solution approach for maximum productivity
- Training – operators on the application, product operation and safety
- Rentals for short term jobs or rent to own – units, accessories, automation tools – complete with training
- Service equipment with experienced technicians, provide 24/7 support by telephone and ship parts quick (most same day)

24/7 SUPPORT PROGRAM

We're there anytime you need us!

The 24/7 Support Program provides Jetstream customers uninterrupted access to critical parts and accessories, service and expertise to keep the job running, no matter the time of day.

800-231-8192
832-590-1300

Jetstream Support
Standard business hours
7 am – 6 pm CST

713-302-7718

After Hours Support Hotline

Jetstream®
Subsidiary of Federal Signal Corporation

Petrochemical refineries are among the most challenging industries to serve because of the quantity and variety of industrial cleaning required.

Some industries we serve:

- Chemical
- Petrochemical
- Automotive
- Pulp & paper
- Steel mills
- Power generation
- Marine
- Construction
- Mining
- Oil field
- Military
- Hydro Demolition

Typical applications:

- Tube and tube bundle cleaning
- Pipe cleaning
- Stack cleaning
- Cooling tower cleaning
- Tank cleaning
- Facilities maintenance
- Grate and floor cleaning
- Automotive paint booth cleaning
- Ship hull cleaning
- Underwater cleaning
- Kiln cleaning
- Surface preparation
- Hydrostatic testing
- BOP testing
- Concrete demolition
- Waterjet cutting

Jetstream TwinForce 650HP Dual Pump Unit

Innovative Engineered Solutions

Jetstream pioneered the use of valve cartridges to allow accessories to be repaired in the field in less than one minute.

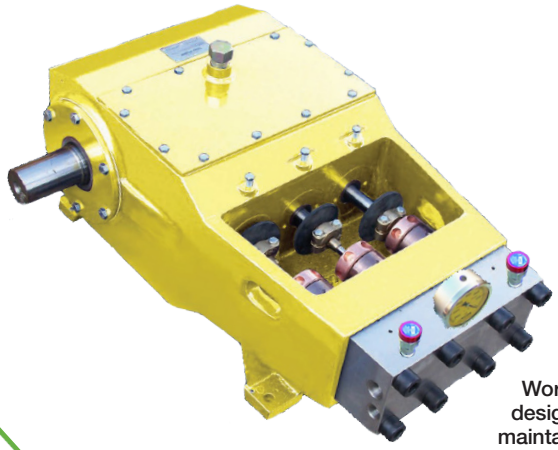

Worldwide, the UNx® pump design is still the simplest to maintain and operate.

Nozzles that spin on a bearing of water.

FS Solutions®
Be Unstoppable™

THE trusted source for industrial cleaning contractors

With 100 years of collective experience in industrial vacuum loading, vacuum excavation and industrial high-pressure water blasting, FS Solutions offers unsurpassed expertise and a unique breadth of product offerings to industrial cleaning contractors and other industry professionals.

- Parts for most makes and models of industrial vacuum loaders, vacuum excavators and waterblasters. Parts are high-performance, high quality. OEM Parts available for Guzzler, Vactor HXX and Jetstream.
- Repairs and total rebuilds of equipment, pumps, blowers and more. Most brands, makes and models.
- Maintenance routine and preventative maintenance on vac trucks, hydro excavators and waterblasters
- Sales of large selection of used and refurbished vacuum trucks, hydro excavators and waterblasters
- Rentals available for short or long term, and rent to own - Jetstream waterblasters, Guzzler and Westech vac trucks, Vactor hydroexcavators and specialized tools.
- Training offered for full line of operator job skills, management and safety training. Compliance training required by OSHA.

FS Solutions is a member of the Federal Signal Environmental Solutions Group which also includes Guzzler Manufacturing, Vactor Manufacturing, Jetstream of Houston, Westech Vac Systems, Elgin Sweeper Company and Joe Johnson Equipment Company.

VACTOR® Subsidiary of Federal Signal Corporation
Jetstream® Subsidiary of Federal Signal Corporation
ELGIN® Subsidiary of Federal Signal Corporation
WESTECH™ Subsidiary of Federal Signal Corporation
Joe Johnson Equipment Subsidiary of Federal Signal Corporation
GUZZLER® Subsidiary of Federal Signal Corporation

800 822-8785
www.FSSolutionsGroup.com
parts@fssolutionsgroup.com

TABLE OF CONTENTS

15,000 PSI (1,034 BAR)

UNITS

TwinForce™ Units....A-1
6000 Series Units....A-2
X-Series Units....A-2
Hydroforce™ Units....A-3
Electric Units....A-3
Custom Units....A-3
Training....A-4
Automated Waterblasting Solutions....A-5

PUMPS & FLUID ENDS

UNx™ Bareshaft Pumps....B-1
UNx™ Fluid Ends....B-15
UNx™ Fluid End Upgrades....B-28

PUMP ACCESSORIES

Spare Parts Packages....C-2
Tools....C-4
Dump-Style Diverter Valves....C-6
- Air-Operated....C-6
- Electric/Air-Operated....C-8
- Hydraulic-Operated....C-10

Shut-In Style Diverter Valves....C-13
- Air-Operated....C-13
- Electric/Air-Operated....C-14

Bypass Valves....C-16
Shut-In Regulator Valves....C-18
Air Compressor....C-21
Electronic Hydro-Throttle....C-22
Mechanical Hydro-Throttle....C-23
Multi-Gun Valve (MGV)....C-24
Multi-Unit Manifolds (MUM)....C-25
Nozzle Shut-Off Valve....C-26
Standard Filters....C-27
Pressure Gauges....C-28
Rupture Disc Holders....C-29
Severe Service Relief Valve....C-30

HOSES & LANCES

Rubber Waterblast Hoses....D-2
Thermoplastic Hoses....D-4
Thermoplastic Flex Lances....D-5
Stainless Steel Braided Flex Lances....D-9
Steelflex™ Lances....D-12
Rigid Lances....D-13
Pressure Drop Data....D-16

FITTINGS

Thread Lubricants & Teflon Tape....E-1
Gauge Accessories....E-2
Quick Connect Couplings....E-2
Crosses....E-3
Tees....E-4
Elbows....E-4
Hammer Unions....E-5
Couplings....E-5
Reducing Bushings....E-6
Hex Nipples....E-7
Nipples....E-8
Plugs....E-8
Y-Fittings....E-9
Rigid Lance Adapters....E-9
Dual Lance Manifolds....E-9
Straight Boss Plugs....E-9
Pressure Conversion Fittings....E-10
Jetstream Hf Male Adapters....E-14
Jetstream Hhp Male Adapters....E-16
Medium Pressure Connections....E-17
Medium Pressure Nipples....E-20
Medium Pressure Gland Nuts, Collars And Plugs..E-20
Medium Pressure Anti-Vibration Gland AssemblieE-21
Medium Pressure Slimline Lance Couplings....E-21

CONTROL GUNS

Durasafe™ Hand Guns....F-2
- Dump Style....F-2
- Shut-In Style....F-7

Zero-Thrust Hand Guns....F-10
Durasafe™ Foot Guns....F-11
- Dump Style....F-11
- Shut-In Style....F-12

ROTARY, STRAIGHT, PIPE & TUBE CLEANING TOOLS & NOZZLES

Orbi-Jet™ X22....G-2
J-Force™ Series....G-6
RotoMag™ X22....G-16
Swivel X15....G-23
H_3Orbiter™....G-26
Pipe Cleaning Nozzles....G-43
Tube Spinner™....G-47
Tube Cleaning Nozzles....G-49
FP Series....G-50
FPC Series....G-50
C Series....G-51
FPT Series....G-51
E Series....G-52
EX Series....G-52
MP Series....G-53
MS Series....G-53
TP Series Thrusters....G-54
FM7 Series....G-55

TABLE OF CONTENTS

15,000 PSI (1,034 BAR)

FB Series G-55
Abrasive Injector Nozzle G-71
Abrasives G-72

SAFETY APPAREL & EQUIPMENT

Visual Safety System H-2
Safety Shrouds H-3
Strain Relief Hose H-4
Safety Hose Checks H-5
Flex Lance Safety Grip H-6
The Warden™ H-7
Centralizers H-8
    Skid Style H-8
    Cage Style H-9
    Scissor Style H-10
Sonetics Apex Wireless Headset H-11
TST Waterjet Protection H-12
Safety Accessories H-18
Turtleskin Waterarmor H-18
Safety Tape, Signs And Decals H-19
Safety Literature And Media H-20

TECHNICAL

Unit Conversions & Formulas I-1
Connection Types I-2

INDEX

Part Numbers J-1
Products J-14

NLB, Butterworth-Partek, Gardner-Denver, Woma, JobBox, Turtleskin, TST, Sonetics, Blue Goop, LocTite, Cordura, Tritan, Weatherford, Wheatley, Union, Universal Minerals, Sharpjet, MaxxStrip, SofStrip, Swagelok, DuPont, Teflon, Partek, Warwick Mills, North Safety, and American Aero are trademarked and/or registered tradenames of their respective companies. Jetstream disclaims any and all rights to these marks.

Jetstream reserves the right to suspend or discontinue the sale of any product contained herein or perform any modifications to product design without prior notification.

UNITS

Jetstream waterblasters are available in a wide selection of standard models with nearly limitless options for customization to suit specific needs. All Jetstream waterblasters employ UNx Fluid End technology for superior performance, greater flexibility in the field, and reduced downtime and maintenance (see page B-15 for details).

HORSEPOWER CHART

COMMON ENGINE POWERS		PUMP DISPLACEMENT* *at 8,000 psi (551 bar)*	
hp	kW	gpm	lpm
MODEL TWINFORCE			
650	484	125.2	470
MODEL 6015			
600	447	115.4	437
MODEL 4215			
325	242	62.6	237
250	186	48.6	183
220	164	40.0	151
MODEL 3615			
170	126	36.0	136
MODEL 3015			
150	112	23.2	88
125	93	23.2	88
110	82	18.4	69

*Displacement (flow) values represented refer to “theoretical” flow, neglecting inefficiency resulting from compressibility of water and expansion of pressure-bearing components.

For diesel engines, contact Jetstream for electric unit chart.

TWINFORCE™ UNITS

The TwinForce series was engineered to outperform other high-flow units by providing a multi-functional product to enhance the utilization of two waterblasting units on one single trailer.

- Two 200 to 325 hp high performance diesel engines
- Pilot bearing free PTOs and covered banded belt drives
- Dual Slave Control Panels for multiple control of both engines from either side
- Dual Water Filters
- High pressure discharge from both units combined into a single control station
- Dual Fuel Tanks
- Tier 4 Engines

TWINFORCE™

6000 SERIES UNITS

The 6000 Series waterblasting system is engineered to outperform and outlast any other unit of its kind.

- 600 HP Volvo Tier 4 engines without the need for a diesel particulate filter.
- Pressure Lubricated Gear Drive Power End
- High-Capacity Aluminum Fuel Tank (Canadian Certified)
- Triple Filtration System - First in its class
- Standard Charge Pump
- Patented Jetstream UNx Fluid End system

6000 SERIES

X-SERIES UNITS

From the innovative UNx pump down to the EZ-Lube wheel bearings, every detail of the X-Series was engineered to minimize maintenance and provide contractors with the most productive and versatile waterblaster on the market today.

- 80 to 325 hp (59 to 242 kW) high performance diesel engines
- Pilot bearing free PTOs and covered banded belt drives
- Guardian Waterblast Filtration System extends component life and increases uptime with built-in filtration
- Available as a skid or low profile trailer with balanced weight distribution for stable towing
- State-of-the-art controls
- Electronic throttle control
- Hand-adjustable bypass valve
- Shutdown system to protect both the engine and the pump

X-SERIES

HYDROFORCE™

HYDROFORCE™ UNITS

JETSTREAM OIL & GAS EQUIPMENT

In the oil and gas industry, hydrostatic testing has always been a primary function. Jetstream strives to provide not only HydroForce™ waterblasting units with pressures up to 22,500 psi, but a complete solution with the assorted tools needed to perform testing with confidence, ensuring accurate blow-out pipeline (BOP) and wellhead testing.

- 80HP to 325HP high performance diesel engines (Electric unit option available)
- Options including: Heavy duty lifting frame, 10,000 psi hydraulic system for torque tools, a JobBox, a digital or manual chart recorder, hydraulic hose reel or auxiliary hose stand

ELECTRIC

ELECTRIC UNITS

Jetstream manufactures several models of electric waterblasters for in-plant installations configured to user requirements.

- 60 to 600 hp (45 to 447 kW)
- TEFC or explosion proof motors
- Soft-start or VFD starters
- Stationary skid

CUSTOM UNIT

CUSTOM UNITS

In addition to a wide selection of standard units and options, close collaboration between Jetstream solutions providers and engineers provide almost unlimited custom options to meet specific needs.
Common requests include:

- Custom trailers and skids
- Special control devices (pneumatic, electronic, hydraulic)
- Customizable to meet special plant requirements Jetstream can build the perfect unit for any job

TRAINING

Jetstream Right Start

In order to ensure customer satisfaction, Jetstream has developed the Right Start program, a four-step plan designed to provide the owners and operators of new Jetstream waterblast units with the knowledge and support needed to feel familiar, confident and satisfied with Jetstream equipment and personnel.

1. Transportation
Once a new waterblaster is built and thoroughly tested, the Shipping Manager contacts the new owner to arrange for the unit's arrival to the right place at the right time.

2. Training
All new waterblasters include personal training by the Right Start Technician. Training involves both classroom and "hands-on" instruction to make sure that each operator is thoroughly familiar with the design and function of the unit and accessories, enabling him to safely put the new equipment to optimal use.

3. Follow-up
Within thirty days of delivery, and again within sixty days, the Solutions Provider will call to answer any questions and ensure complete satisfaction.

4. Trust
If any questions or problems ever arise, the Jetstream team is available and committed to providing prompt answers and solutions.

CLASSES OFFERED

PUMP OPERATION & MAINTENANCE

The course combines extensive hands-on training with classroom instruction and is recommended for maintenance personnel, operator and supervisors.

Class Length: 3 days

Class Size: 10 maximum

Location: Jetstream Manufacturing Training Center
Houston, TX

Call for class schedules and availability. Classes can be tailored to those in attendance.

This course covers:

- Safe waterblast operation
- Unit maintenance and troubleshooting
- Physical application and related safety issues
- Safe pump operation
- Pump maintenance
- The UNx System (10k, 20k and 40k)
- Swapping fluid ends
- Waterblast guns
- Pedals and accessories
- Uni-valves
- Proper packing, disassembly, repair and re-lapping
- Hoses, lances, nozzles
- Recommended spare parts
- Preventative maintenance and winterization

SAFETY-FS SOLUTIONS

As the experts on waterblast and industrial vacuum equipment. FS Solutions makes OSHA training and compliance more convenient than ever through hands on courses developed by Gary Toothe, whose significant contributions and 25 years of experience are well-known in the waterblast and industrial vacuum industries.

ONLINE WITH FEDERAL SIGNAL ESG UNIVERSITY

- Work at your pace and convenience
- Remain compliant with OSHA training
- Safety increase productivity
- Decrease risk of future liability

Additional Tools

- Jetstream Safety Manual **Part No. 62113**

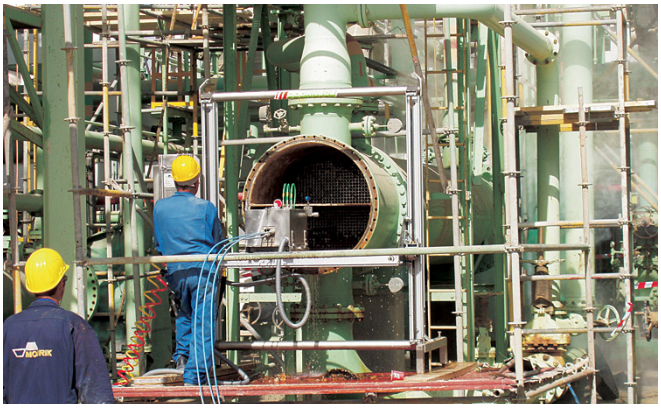

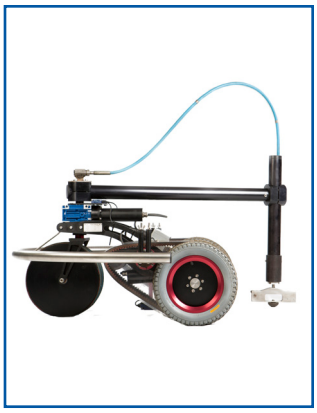

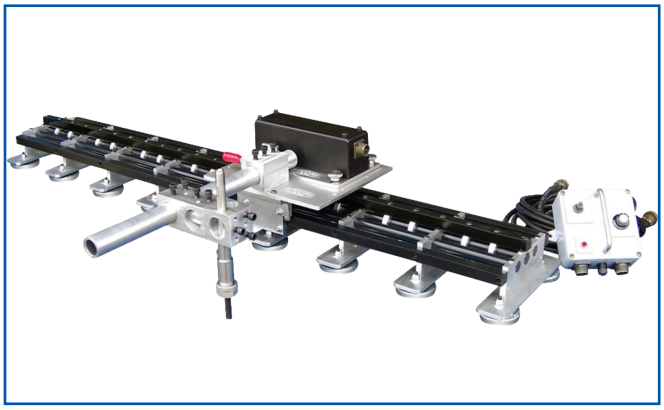

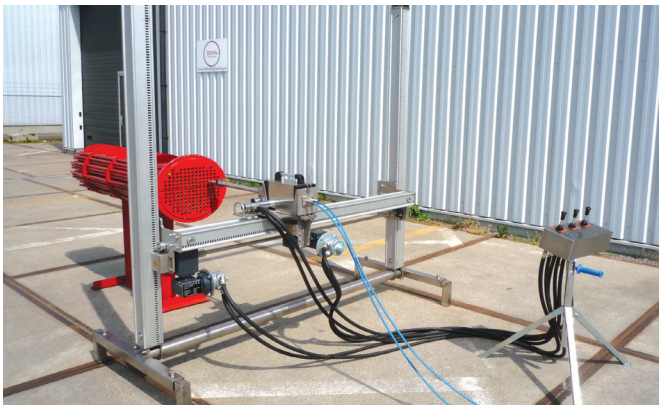

AUTOMATED WATERBLASTING SOLUTIONS

Automation is a rapidly growing waterblast solution for tube cleaning, tank and boiler cleaning, surface preparation and hydro-demolition. Hands-free operation is key to a safe work environment. Positioning the operator at a distance, away from the work area, is the number one benefit to utilizing automated tools. This placement away from direct contact with the high pressure application allows for quick reaction time and decreases the possibility for employee injury.

To enhance operator safety, productivity and efficiency, Jetstream has partnered with strategic manufacturers of specialty equipment in automated and robotic tools and accessories. These alliances allow Jetstream to provide a total solution to the customer, from the waterblasting unit to the tools needed to perform the job safely and efficiently.

Offering the broadest range of automation solutions for industrial cleaning contractors, Jetstream provides:

- The broadest offering of hands free cleaning solutions
- Innovative, automated and robotic tools and accessories
- On-site solutions provided by regional automation specialists
- Rent or purchase options on a variety of state-of-the-art tooling
- Convenience with availability through Jetstream and FS Solutions rental centers
- Robotic and mechanical hydro-demolition solutions available for rent
- Application and safety training

For a list of products offered, contact your Regional Sales Manager or Inside Sales Technician for more details.

UNITS

15,000 PSI (1,034 BAR)

UNx™ BARESHAFT PUMPS

FEATURES AND BENEFITS

The Jetstream 15,000 psi UNx Bareshaft Pump provides unrivaled durability and strength. The pump is capable of power inputs up to 600 horsepower and, coupled with the best Jetstream UNx fluid end, provides flow* rates approaching one hundred and fifteen gallons per minute. Jetstream bareshaft pumps are the best choice for those building their own system or replacing a complicated, worn, or unreliable pump.

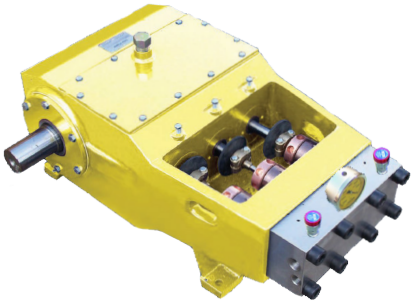

The following UNx Bareshaft Pumps available:

- 6000 Series (6015): 600HP @ 115.4 gpm
- 4200 Series (4215): 325HP @ 62.1 gpm
- 3600 Series (3615): 270HP @ 27.4 gpm
- 3000 Series (3015): 150HP @ 23.2 gpm

Fourteen different pump displacement levels are available within the four series. See pages B-2, B-4, and B-11 for further details.

Power End:

- Ductile iron power frame is the strongest in the industry
- Heat treated billet alloy steel crankshaft
- Largest bearings of any pump on the market

UNx Fluid End:

- Superior performance
- Greater flexibility in the field
- Reduced downtime and maintenance
- See UNx Features and benefits on page B-15

NOTE: The placement of the crankshaft (right hand or left hand side) and paint color are required when ordering a bareshaft pump. Standard paint color is yellow.

*Displacement (flow) values represented refer to “theoretical” flow, neglecting inefficiency resulting compressibility of water and expansion of pressure-bearing components.

MODEL 6015
UNx™ BARESHAFT PUMP

The Jetstream model 6015 waterblast pump is capable of power input of up to 600 horsepower (447 kW). It is the most advanced and efficient compact waterblast pump in the industry. Combining the strength and durability of a proven power end workhorse with the unparalleled simplicity, serviceability and versatility of the UNx fluid end design, Jetstream bareshaft pumps are the best choice for those building their own system or replacing a complicated, worn, or unreliable pump.

- Up to 600 horsepower (447 kW)
- Maximum Flow: 61.7 gpm (233.6 lpm) at 15,000 psi (1034 bar)
  64.1 gpm (242.7 lpm) at 14,000 psi (965 bar)
  92.7 gpm (350.9 lpm) at 10,000 psi (689 bar)
  115.4 gpm (436.8 lpm) at 8,000 psi (551 bar)
- Three plunger (triplex) design

UNX FLUID END FEATURES

- Internal Gear Drive

POWER END SPECS

MAX. POWER INPUT		PLUNGERS			CONNECTION TYPE (Discharge)	PUMP RPM	MAX. FRAME LOAD		TOTAL WEIGHT		PUMP OIL*		
		#	STROKE								TYPE	CAPACITY	
hp	kW		in	mm	Jetstream HF	RANGE	lb	kN	lb	kg		gal	l
600	447	3	5.51	140		100-457	28,775	128	2800	1,270	250-320*	11.9	45

*See manual for list of approved oils.

FLUID END SPECS

PUMP AY PART NO.*	PLUNGER SIZE			GEAR RATIO	PUMP DISPLACEMENT AT SPECIFIED PUMP SPEEDS**												MAX. OPERATING PRESSURE	
	NO.	DIAMETER			1200 RPM		1400 RPM		1600 RPM		1800 RPM		2000 RPM		2100 RPM			
		in	mm		gpm	lpm	gpm	lpm	gpm	lpm	gpm	lpm	gpm	lpm	gpm	lpm	psi	bar
66510	#15	1.55	39.37	3.96 LH	40.9	155	47.8	180.9	54.6	206.7	61.7	233.6	-	-	-	-	15,000	1034
66511	#15	1.55	39.3	3.96 RH	40.9	155	47.8	180.9	54.6	206.7	61.7	233.6	-	-	-	-	15,000	1034
66509	#15	1.55	39.3	4.60 LH	35.2	133.5	41.1	155.7	47	178	52.9	200.2	58.7	222.4	61.7	233.6	15,000	1034
65025	#15	1.55	39.3	4.60 RH	35.2	133.5	41.1	155.7	47	178	52.9	200.2	58.7	222.4	61.7	233.6	15,000	1034
66514	#16	1.58	40.13	3.96 LH	42.5	161.1	49.6	187.9	56.7	214.8	64.1	242.6	-	-	-	-	14,500	1000
66168	#16	1.58	40.13	3.96 RH	42.5	161.1	49.6	187.9	56.7	214.8	64.1	242.6	-	-	-	-	14,500	1000
66512	#16	1.58	40.13	4.60 LH	36.6	138.7	42.7	161.8	48.8	184.9	54.9	208	61	231.1	64.1	242.7	14,500	1000
66513	#16	1.58	40.13	4.60 RH	36.6	138.7	42.7	161.8	48.8	184.9	54.9	208	61	231.1	64.1	242.7	14,500	1000
66517	#19	1.90	48.26	3.96 LH	61.5	233	71.8	271.8	82	310.6	92.8	351.3	-	-	-	-	10,000	689
66518	#19	1.90	48.26	3.96 RH	61.5	233	71.8	271.8	82	310.6	92.8	351.3	-	-	-	-	10,000	689
66515	#19	1.90	48.26	4.60 LH	53	200.5	61.8	234	70.6	267.4	79.4	300.8	88.3	334.2	92.7	350.9	10,000	689
66516	#19	1.90	48.26	4.60 RH	53	200.5	61.8	234	70.6	267.4	79.4	300.8	88.3	334.2	92.7	350.9	10,000	689
66523	#21	2.12	53.85	3.96 LH	76.6	290	89.4	338.4	102.1	386.7	115.4	436.8	-	-	-	-	8,000	551
66524	#21	2.12	53.85	3.96 RH	76.6	290	89.4	338.4	102.1	386.7	115.4	436.8	-	-	-	-	8,000	551
66519	#21	2.12	53.85	4.60 LH	65.9	249.4	76.9	291	87.9	332.7	98.9	374.3	109.9	416.0	115.4	436.8	8,000	551
66520	#21	2.12	53.85	4.60 RH	65.9	249.4	76.9	291	87.9	332.7	98.9	374.3	109.9	416.0	115.4	436.8	8,000	551

* Contact a Jetstream Solutions Provider to verify order lead time for power ends.
**Flow values represented refer to "theoretical" flow, neglecting inefficiency resulting compressibility of water and expansion of pressure-bearing components.

MODEL 6015
UNX™ BARESHAFT PUMP
DIAGRAMS

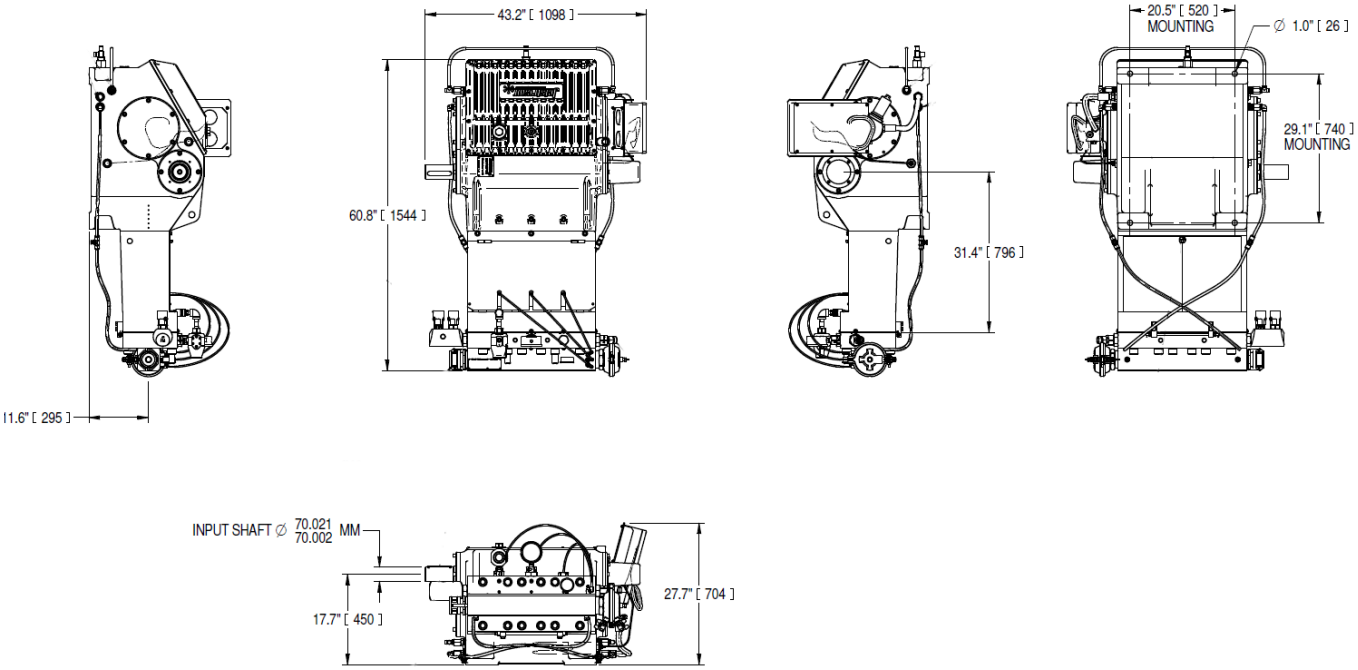

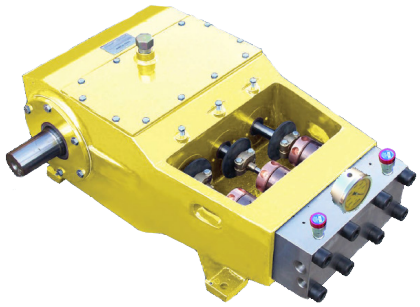

MODEL 4215HF
UNx™ BARESHAFT PUMP

The Jetstream model 4215HF waterblast pump is capable of power input of 200 to 325 horsepower (242 kW). It is the most advanced and efficient waterblast pump of its size in the industry. Combining the strength and durability of a proven power end workhorse with the unparalleled simplicity, serviceability and versatility of the UNx fluid end design, Jetstream bareshaft pumps are the best choice for those building their own system or replacing a complicated, worn or unreliable pump.

- 200 to 325 horsepower (149 to 242 kW)
- Three Plunger (triplex)

UNX FLUID END FEATURES

- Ductile iron power frame is the strongest in the industry
- Crankshaft machined from high-tech forged alloy for superior performance at higher power input
- Largest bearings of any comparable pump on the market
- Maximum Flow: 32.3 gpm (122 lpm) at 15,000 psi (1034 bar)
  40.0 gpm (151 lpm) at 12,500 psi (861 bar)
  50.5 gpm (191 lpm) at 10,000 psi (689 bar)
  62.6 gpm (237 lpm) at 8,000 psi (551 bar)

POWER END SPECS (POWER END ONLY P/N: 60208-XX)

PLUNGERS			CONNECTION TYPES*		PUMP SPEED RANGE	POWER END	MAX. POWER INPUT		MAX. FRAME LOAD		TOTAL WEIGHT (Pump w/FE)		PUMP OIL CAPACITY	
#	STROKE		DISCHARGE PORTS	TOP PORTS (ACCESSORY)	RPM									
	in	mm					hp	kW	lb	kN	lb	kg	gal	l
3	4.25	108	3/4″ NPT Female	1/2″ NPT Female	173 - 518	4200HD	325	242	17,750	79	1,800	820	9	34

*See details on all connection types in Section I.

FLUID END SPECS

PUMP PART NO.	PLUNGER SIZE			MAX. POWER INPUT		FLOW AT SPECIFIED PUMP SPEEDS**												MAX. OPERATING PRESSURE	
	NO.	DIAMETER				173 RPM		200 RPM		300 RPM		400 RPM		500 RPM		518 RPM			
		in	mm	hp	kW	gpm	lpm	gpm	lpm	gpm	lpm	gpm	lpm	gpm	lpm	gpm	lpm	psi	bar
52130	#10	.980	24.89	210	157	7.2	27	8.3	32	12.5	47	16.7	63	20.8	79	21.6	82	15,000	1034
52135	#11	1.100	27.94	260	194	9.0	34	10.5	40	15.7	60	21.0	79	26.2	99	27.2	102	15,000	1034
55095	#12	1.200	30.48	325	242	10.8	41	12.5	47	18.7	71	25.0	95	31.2	118	32.3	122	15,000	1034
55090	#13	1.335	33.91	325	242	13.3	50	15.5	59	23.2	88	30.9	117	38.6	146	40.0	151	12,500	861
55085	#15	1.500	38.10	325	242	16.8	63	19.5	74	29.3	111	39.0	148	48.8	185	50.5	191	10,000	689
55080	#16	1.670	42.42	325	242	20.9	79	24.2	92	36.3	137	48.4	183	60.5	229	62.6	237	8,000	551
63794	#18	1.810	45.97	325	242	24.5	93	28.4	108	42.5	161	56.7	215	70.9	268	73.5	278	6,800	469

**Flow values represented refer to “theoretical” flow, neglecting inefficiency resulting compressibility of water and expansion of pressure-bearing components.

MODEL 4215HF
UNX™ BARESHAFT PUMP
DIAGRAMS

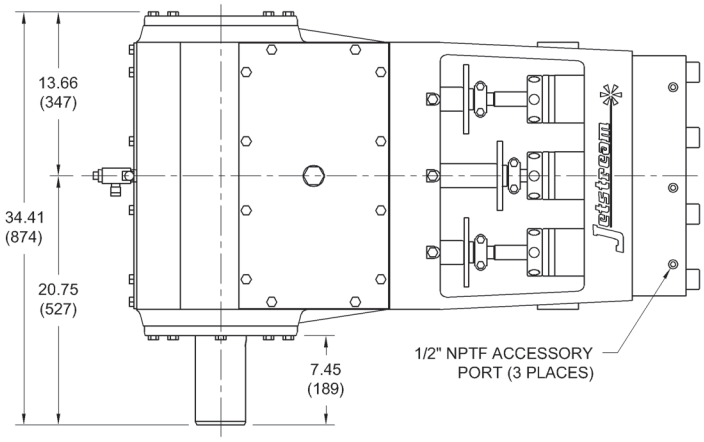

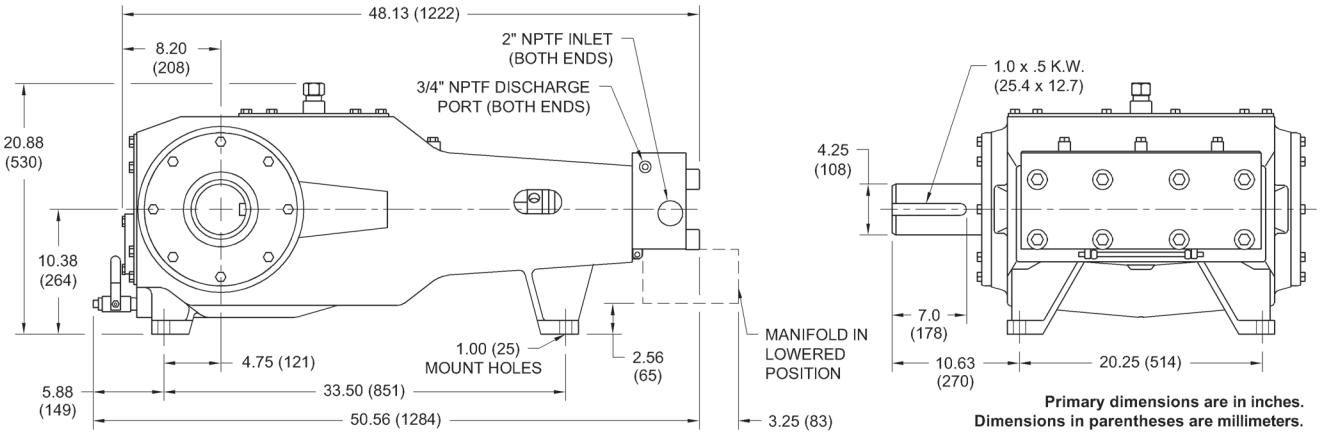

Primary dimensions are in inches.
Dimensions in parentheses are millimeters.

Optional Gear Drive

An optional Gear Drive can be added to the 4215HF Bareshaft Pump. Several options are available, as well as the specific clocking position needed. Contact your Jetstream Sales Manager for more information.

PART NO.	DRIVE RATIO	MAX INPUT SPEED
59100-16-69	4.31:1	2230 RPM
59100-17-68	4.00:1	2070 RPM
59100-19-67	3.53:1	1825 RPM
59100-22-64	2.91:1	1500 RPM

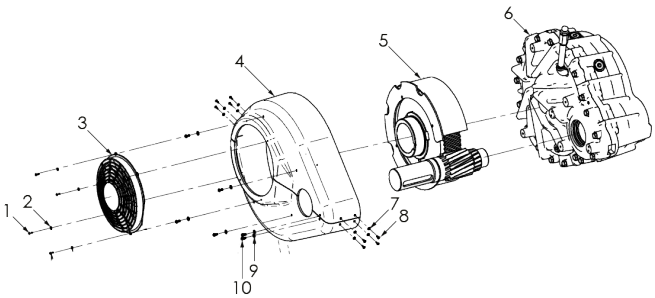

PART BREAKDOWN (GEAR DRIVE)

ITEM	PART NO.	DESCRIPTION	ITEM	PART NO.	DESCRIPTION
1	65082	Screw	6	59101	Gear Drive Kit Common Parts
2	57244	Washer	7	57244	Washer
3	Various	Fan	8	65082	Screw
4	64883	Fan Shroud	9	70206	Washer
5	Various	Gear Drive Kit, dependent on gear ratio	10	63790	Capscrew

MODEL 4215HF
UNX™ BARESHAFT PUMP
PART BREAKDOWN

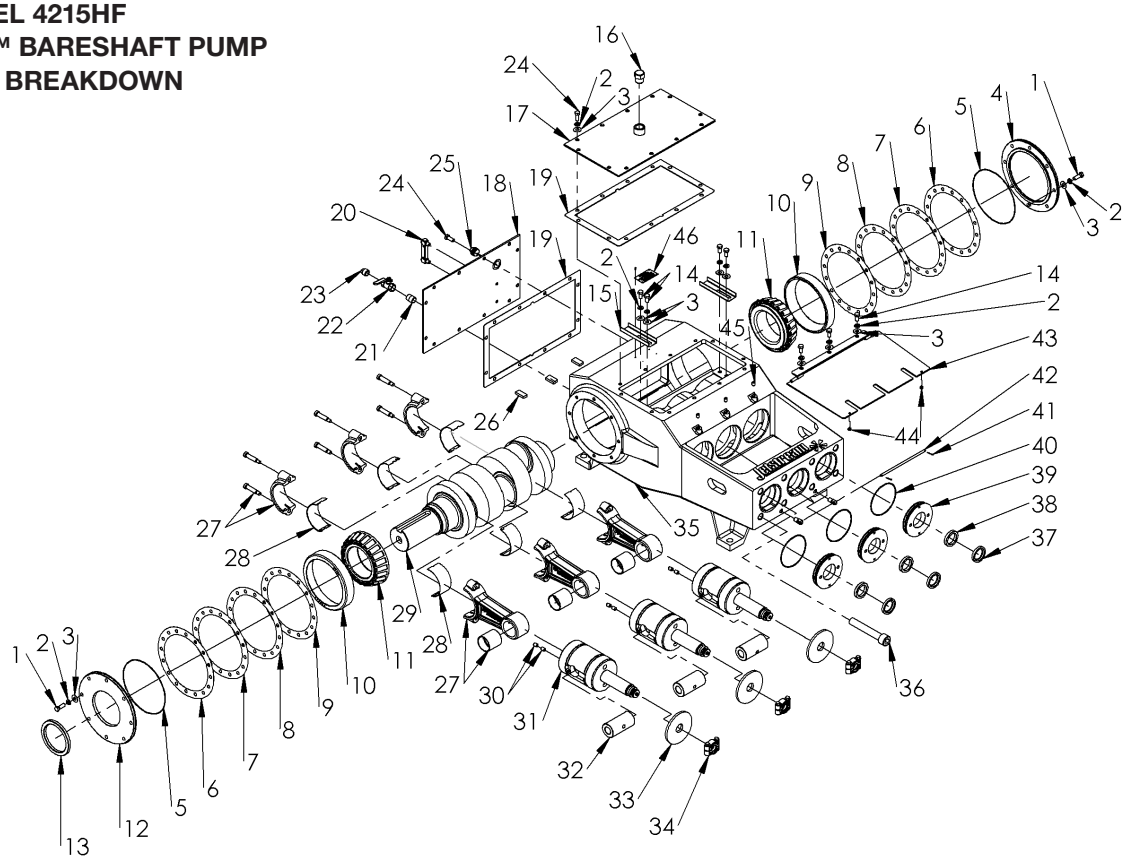

PART BREAKDOWN

ITEM	PART NO.	DESCRIPTION	ITEM	PART NO.	DESCRIPTION	ITEM	PART NO.	DESCRIPTION
1	26435	Capscrew	18	55253	Plate, Back Cover	34	51736	Plunger Coupling
2	26558	Washer	19	26195	Gasket, Cover Plate	35	60208-XX	Power Frame
3	26798	Washer	20	71318	Gauge, Oil Level, 3.5″	36	26500	Capscrew
4	51536	Cap, Frame, Outboard		28062	Gauge, Oil Level, 4″	37	04101	Oil Seal, Outboard
5	71017	O-Ring	21	25946	Nipple	38	26481	Oil Seal, Inboard
6	26259	Shim, End Cap, Yellow	22	27101	Ball Valve	39	51713	Oil Seal Plate
7	26259-1	Shim, End Cap, Brown	23	25928	Plug	40	26479	O-Ring
8	26259-2	Shim, End Cap, White	24	26491	Capscrew	41	26468	Cotter Pin
9	26259-3	Shim, End Cap, Blue	25	29738	Plug	42	50295	Trunnion Rod
10	26376	Bearing, Race	26	26705	Magnet	43	61721	Cover, Rod Box
11	26390	Bearing, Cone	27	51487	Connecting Rod Assy	44	27592	Rubber Stopper
12	51538	Cap, Frame, Inboard	28	26051	Journal Bearing	45	26482	Setscrew
13	26208	Crankshaft Seal	29	28826	Crankshaft	46	26590	Caution Plate
14	26361	Capscrew	30	26369	Setscrew	47*	51659	Trunnion
15	26484	Oil Trough	31	51731	Crosshead	48*	26379	Setscrew
16	26360	Breather Cap	32	51534	Crosshead Pin	49*	56949	Puller, Oil Seal Plate
17	51279	Plate, Top Cover	33	26487	Deflector	50*	71147	Warning Decals, Pump Only

*Not Shown

MODEL 3615HF
UNx™ BARESHAFT PUMP

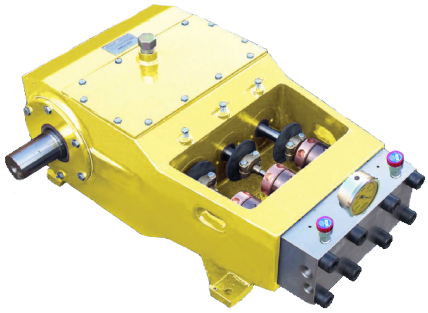

The Jetstream model 3615HF waterblast pump is capable of power input of up to 270 horsepower (201 kW). It is the most advanced and efficient medium horsepower waterblast pump in the industry. Combining the strength and durability of a proven power end workhorse with the unparalleled simplicity, serviceability and versatility of the UNx fluid end design, Jetstream bareshaft pumps are the best choice for those building their own system or replacing a complicated, worn or unreliable pump.

- Three Plunger (triplex) design
- Up to 270 horsepower (201 kW)
- Maximum Flow: 19.4 gpm (73 lpm) at 15,000 psi (1034 bar)
  24.4 gpm (93 lpm at 12,000 psi (827 bar)
  29.1 gpm (110 lpm) at 10,000 psi (689 bar)
  36.0 gpm (136 lpm) at 8,000 psi (551 bar)
  36.0 gpm (136 lpm) at 6,500 psi (448 bar)
  45.5 gpm (172 lpm) at 6,000 psi (413 bar)
  45.5 gpm (172 lpm) at 5,000 psi (344 bar)
  66.2 gpm (251 lpm) at 4,500 psi (310 bar)
  66.2 gpm (251 lpm) at 4,000 psi (276 bar)

POWER END SPECS (POWER END ONLY P/N: 60209-XX)

PLUNGERS			CONNECTION TYPES*		PUMP SPEED RANGE	MAX. POWER INPUT		MAX. FRAME LOAD		TOTAL WEIGHT		OIL TYPE	PUMP OIL CAPACITY	
#	STROKE		DISCHARGE PORTS	TOP PORTS (ACCESSORY)	RPM									
	in	mm				hp	kW	lb	kN	lb	kg		gal	l
3	3.60	92	3/4″ NPT Female	1/2″ NPT Female	183 - 550	270	201	17,750	79	1,720	780	80W-90	9	34

*See details on all connection types in Section I.

PUMPS & FLUID ENDS

15,000 PSI (1,034 BAR)

FLUID END SPECS

PUMP PART NO.	PLUNGER SIZE			MAX. POWER INPUT		FLOW AT SPECIFIED PUMP SPEEDS**												MAX PRESSURE	
	NO.	DIAMETER				183 RPM		200 RPM		300 RPM		400 RPM		500 RPM		518 RPM			
		in	mm	hp	kW	gpm	lpm	gpm	lpm	gpm	lpm	gpm	lpm	gpm	lpm	gpm	lpm	psi	bar
52575	#9	.900	22.86	150	112	5.4	21	6.0	23	8.9	34	11.9	45	14.9	56	15.4	58	15,000	1034
52570	#10	.980	24.89	190	142	6.5	24	7.1	27	10.6	40	14.1	53	17.6	67	18.3	69	15,000	1034
				170	127													13,500	931
				150	112													12,000	827
52565	#11	1.100	27.94	230	172	8.1	31	8.9	34	13.3	50	17.8	67	22.2	84	23.0	87	15,000	1034
				190	142													12,000	827
				170	127													11,000	758
				150	112													10,000	689
52560	#12	1.200	30.48	270	201	9.7	37	10.6	40	15.9	60	21.2	80	26.4	100	27.4	104	15,000	1034
				190	142													10,000	689
				170	127													9,000	620
				150	112													8,000	551
52555	#13	1.335	33.91	270	201	12.0	45	13.1	50	19.6	74	26.2	99	32.7	124	33.9	128	12,500	862
				190	142													8,000	551
				170	127													7,500	517
				150	112													6,500	448
52550	#15	1.500	38.10	270	201	15.1	57	16.5	63	24.8	94	33.1	125	41.3	156	42.8	162	10,000	689
				190	142													6,500	448
				170	127													6,000	413
				150	112													5,000	344
62756	#16	1.670	42.42	270	201	18.7	71	20.5	78	30.7	116	41.0	155	51.2	194	53.1	201	8,000	551
				190	142													5,000	344
				170	127													4,500	310
				150	112													4,000	276
63794	#18	1.800	45.72	270	201	22.0	83	24.1	91	36.1	137	48.1	182	60.2	228	62.3	236	6,800	469
				190	142													4,500	310
				170	127													4,000	276
				150	112													3,500	241

**Flow values represented refer to “theoretical” flow, neglecting inefficiency resulting compressibility of water and expansion of pressure-bearing components.

MODEL 3615HF
UNX™ BARESHAFT PUMP
DIAGRAMS

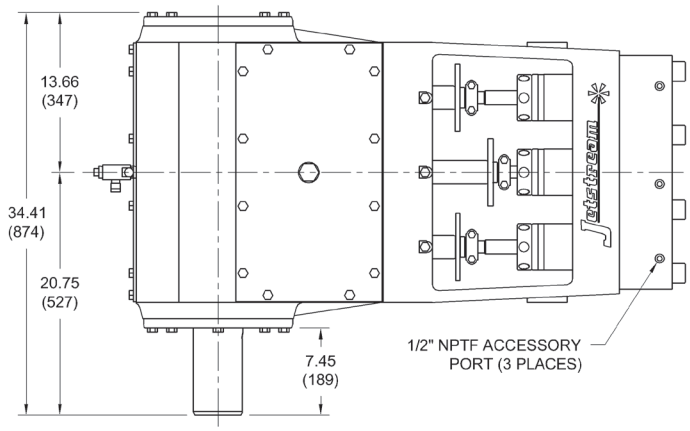

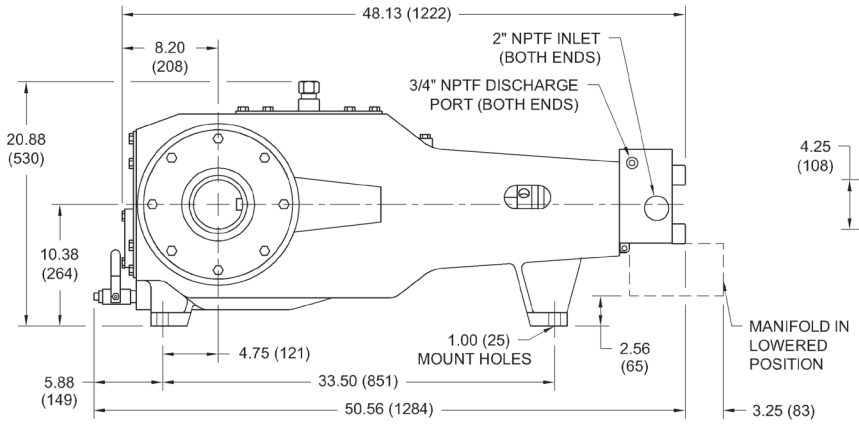

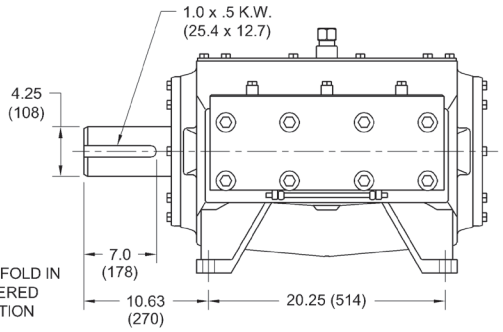

Primary dimensions are in inches.
Dimensions in parentheses are millimeters.

Optional Gear Drive

An optional Gear Drive can be added to the 3615HF Bareshaft Pump. Several options are available, as well as the specific clocking position needed. Contact your Jetstream Sales Manager for more information.

PART NO.	DRIVE RATIO	MAX INPUT SPEED
59100-16-69	4.31:1	2372 RPM
59100-17-68	4.00:1	2200 RPM
59100-19-67	3.53:1	1940 RPM
59100-22-64	2.91:1	1600 RPM

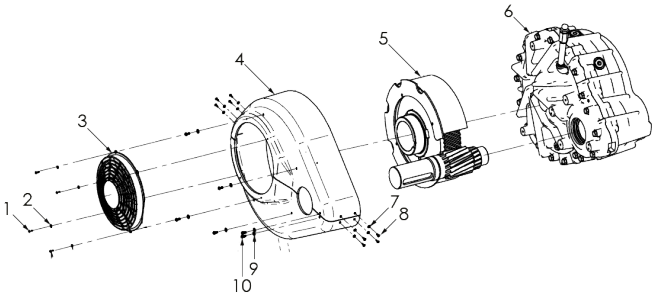

PART BREAKDOWN (GEAR DRIVE)

ITEM	PART NO.	DESCRIPTION	ITEM	PART NO.	DESCRIPTION
1	65082	Screw	6	59101	Gear Drive Kit Common Parts
2	57244	Washer	7	57244	Washer
3	Various	Fan	8	65082	Screw
4	64883	Fan Shroud	9	70206	Washer
5	Various	Gear Drive Kit, dependent on gear ratio	10	63790	Capscrew

MODEL 3615HF
UNX™ BARESHAFT PUMP
PART BREAKDOWN

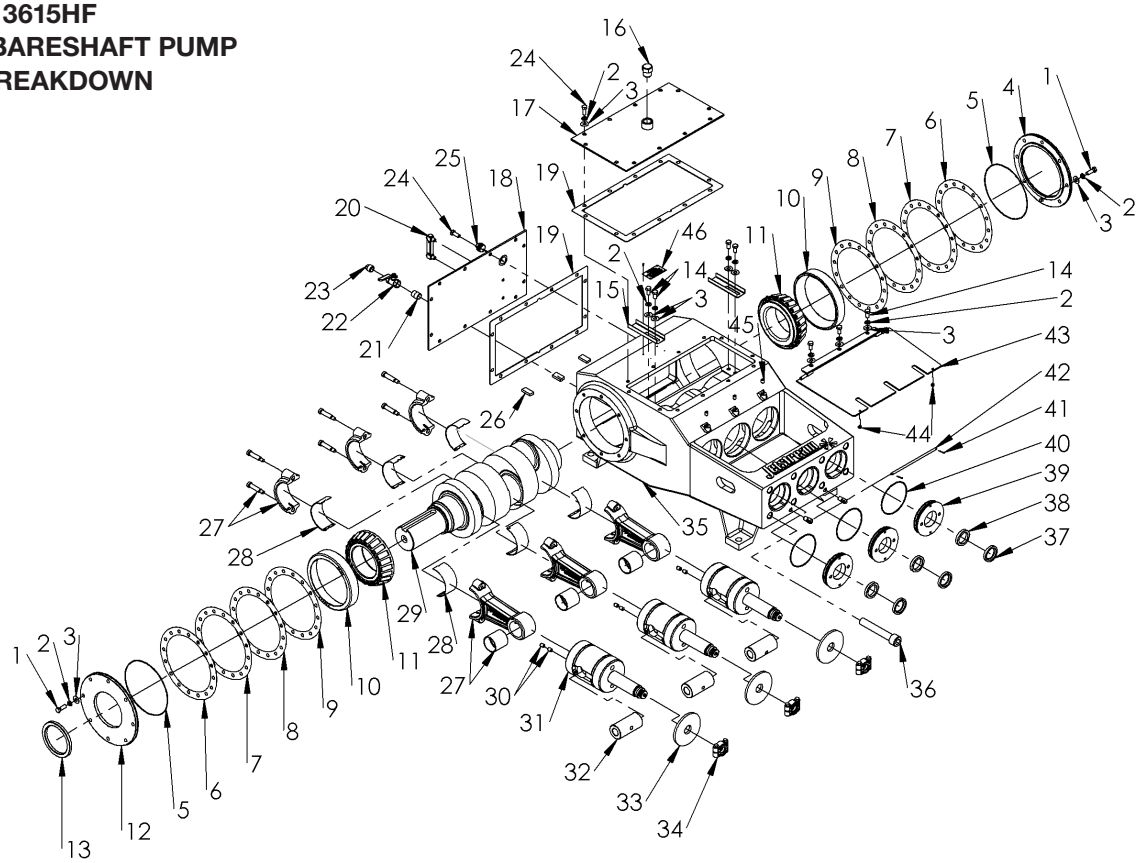

PART BREAKDOWN

ITEM	PART NO.	DESCRIPTION	ITEM	PART NO.	DESCRIPTION	ITEM	PART NO.	DESCRIPTION
1	26435	Capscrew	18	55253	Plate, Back Cover	34	51736	Plunger Coupling
2	26558	Washer	19	26195	Gasket, Cover Plate	35	51421	Power Frame
3	26798	Washer	20	71318	Gauge, Oil Level, 3.5″	36	26500	Capscrew
4	51536	Cap, Frame, Outboard		28062	Gauge, Oil Level, 4″	37	04101	Oil Seal, Outboard
5	71017	O-Ring	21	25946	Nipple	38	26481	Oil Seal, Inboard
6	26259	Shim, End Cap, Yellow	22	27101	Ball Valve	39	51713	Oil Seal Plate
7	26259-1	Shim, End Cap, Brown	23	25928	Plug	40	26479	O-Ring
8	26259-2	Shim, End Cap, White	24	26491	Capscrew	41	26468	Cotter Pin
9	26259-3	Shim, End Cap, Blue	25	29738	Plug	42	50295	Trunnion Rod
10	26376	Bearing, Race	26	26705	Magnet	43	61721	Cover, Rod Box
11	26390	Bearing, Cone	27	51487	Connecting Rod Assy	44	27592	Rubber Stopper
12	51538	Cap, Frame, Inboard	28	26051	Journal Bearing	45	26482	Setscrew
13	26208	Crankshaft Seal	29	53600	Crankshaft	46	26590	Caution Plate
14	26361	Capscrew	30	26369	Setscrew	47*	51659	Trunnion
15	26484	Oil Trough	31	51731	Crosshead	48*	26379	Setscrew
16	26360	Breather Cap	32	51534	Crosshead Pin	49*	56949	Puller, Oil Seal Plate
17	51279	Plate, Top Cover	33	26487	Deflector			

*Not Shown

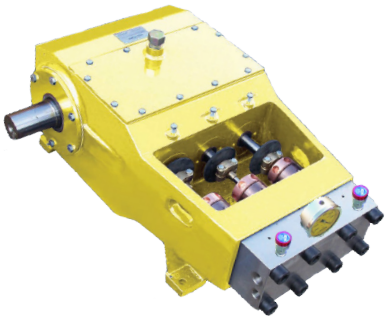

MODEL 3015
UNx™ BARESHAFT PUMP

The Jetstream model 3015 waterblast pump is capable of power input of up to 150 horsepower (112 kW). It is the most advanced and efficient compact waterblast pump in the industry. Combining the strength and durability of a proven power end workhorse with the unparalleled simplicity, serviceability and versatility of the UNx fluid end design, Jetstream bareshaft pumps are the best choice for those building their own system or replacing a complicated, worn or unreliable pump.

- Up to 150 horsepower (112 kW)
- Three Plunger (triplex) design

UNX FLUID END FEATURES

- Ductile iron power frame is the strongest in the industry
- Largest bearings of any comparable pump on the market
- Maximum Flow: 14.9 gpm (56 lpm) at 15,000 psi (1034 bar)
  18.4 gpm (70 lpm) at 10,000 psi (689 bar)
  23.2 gpm (88 lpm) at 9,000 psi (620 bar)

POWER END SPECS

PLUNGERS			CONNECTION TYPES*		PUMP SPEED RANGE	MAX. POWER INPUT		MAX. FRAME LOAD		TOTAL WEIGHT		TYPE	PUMP OIL CAPACITY	
#	STROKE		DISCHARGE PORTS	TOP PORTS (ACCESSORY)	RPM									
	in	mm				hp	kW	lb	kN	lb	kg		gal	l
3	3.00	76	1/2″ NPT Female	1/2″ NPT Female	200 – 600	150	112	9,500	42	970	440	80W-90	5	19

*See details on all connection types in Section I.

FLUID END SPECS

PUMP PART NO.	PLUNGER SIZE			MAX. POWER INPUT		FLOW AT SPECIFIED PUMP SPEEDS**										MAX. OPERATING PRESSURE	
	NO.	DIAMETER				200 RPM		300 RPM		400 RPM		500 RPM		600 RPM			
		in	mm	hp	kW	gpm	lpm	gpm	lpm	gpm	lpm	gpm	lpm	gpm	lpm	psi	bar
51760	#7	.735	18.67	96	67	3.3	13	5.0	19	6.6	25	8.3	31	9.9	37	15,000	1034
51765	#8	.800	20.32	114	82	3.9	15	5.9	22	7.8	30	9.8	37	11.8	44	15,000	1034
				96	67											12,000	827
51770	#9	.900	22.86	150	112	5.0	19	7.4	28	9.9	38	12.4	47	14.9	56	15,000	1034
				125	93											12,500	861
				90	67											10,000	689
51775	#10	1.000	25.40	150	112	6.1	23	9.2	35	12.2	46	15.3	58	18.4	70	12,000	827
				125	93											10,000	689
				90	67											8,000	551
52275	#11	1.125	28.58	150	112	7.7	29	11.6	44	15.5	59	19.4	73	23.2	88	9,000	620
				125	93											8,000	551
				90	67											6,500	448

**Flow values represented refer to "theoretical" flow, neglecting inefficiency resulting compressibility of water and expansion of pressure-bearing components.

MODEL 3015
UNX™ BARESHAFT PUMP
DIAGRAM

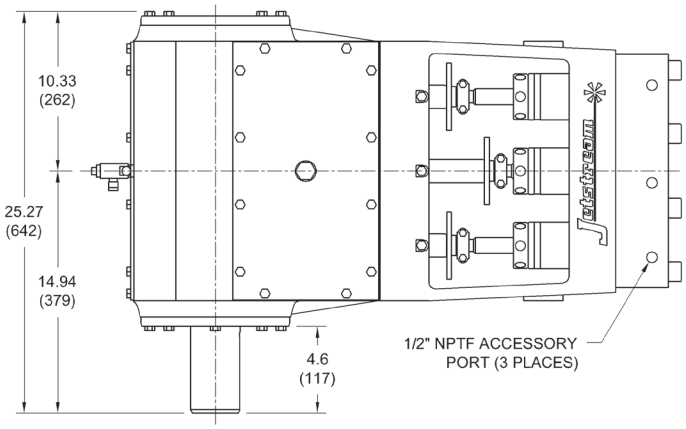

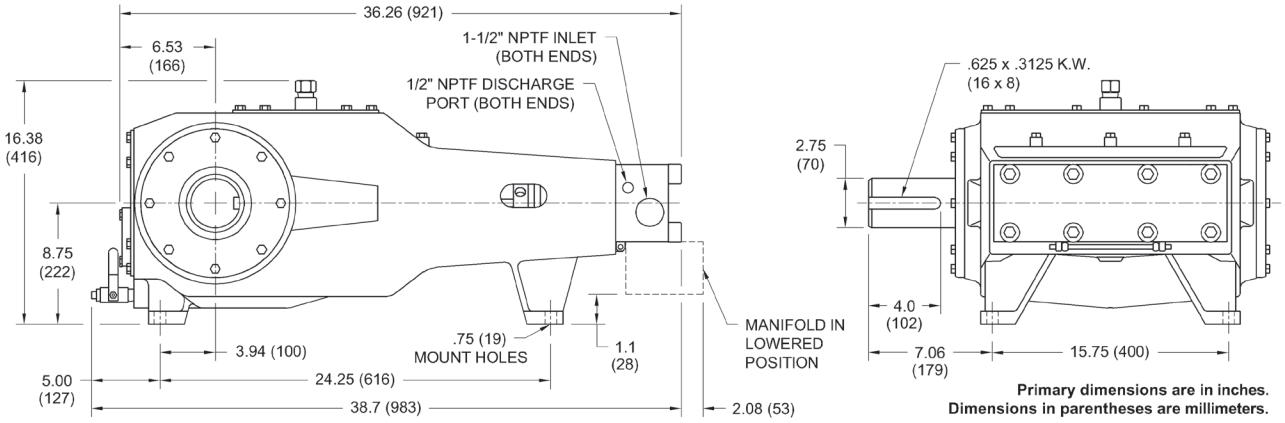

Optional Gear Drive

An optional Gear Drive can be added to the 3015 Bareshaft Pump. Several options are available, as well as the specific clocking position needed. Contact your Jetstream Sales Manager for more information.

PART NO.	DRIVE RATIO	MAX INPUT SPEED
58501-17-68	4.00:1	2400 RPM
58501-18-66	3.67:1	2200 RPM
58501-21-23	3.00:1	1800 RPM
58501-24-60	2.50:1	1500 RPM

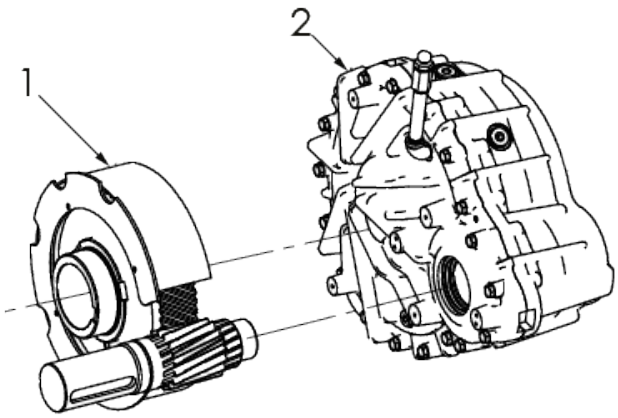

PART BREAKDOWN (GEAR DRIVE)

ITEM	PART NO.	DESCRIPTION
1	Various	Gear Drive - dependent on gear ratio
2	58873	Gear Drive Kit Common Parts

MODEL 3015
UNX™ BARESHAFT PUMP
PART BREAKDOWN

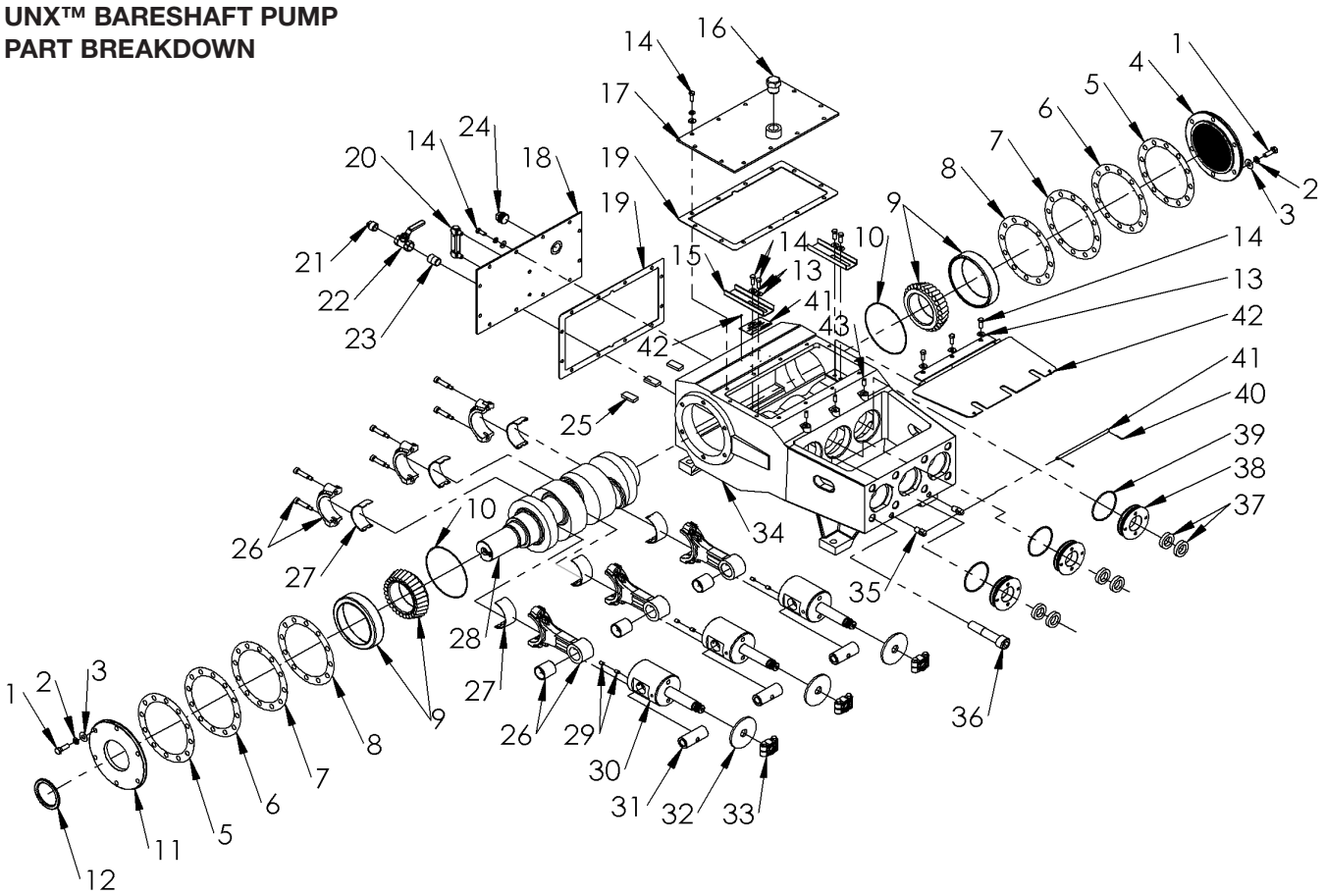

PART BREAKDOWN

ITEM	PART NO.	DESCRIPTION	ITEM	PART NO.	DESCRIPTION	ITEM	PART NO.	DESCRIPTION
1	26435	Capscrew	16	26360	Breather Cap	30	51738	Crosshead
2	26558	Washer	17	50807	Plate, Top Cover	31	52077	Crosshead Pin
3	26798	Washer	18	55252	Plate, Back Cover	32	26623	Deflector
4	51733	Cap, Frame, Outboard	19	26496	Gasket, Cover Plate	33	51737	Plunger Coupling
5	29495	Shim, End Cap, Yellow	20	71318	Gauge, Oil Level, 3.5"	34	51748	Power Frame
6	26495-1	Shim, End Cap, Brown		28062	Gauge, Oil Level, 4"	35	51659	Trunnion
7	26495-2	Shim, End Cap, White	21	25928	Plug	36	26462	Capscrew
8	26495-3	Shim, End Cap, Blue	22	27101	Ball Valve	37	25536	Oil Seal
9	25541	Bearing Assembly	23	25946	Nipple	38	51712	Oil Seal Plate
10	71016	O-Ring	24	29738	Plug	39	26478	O-Ring
11	51732	Cap, Frame, Inboard	25	26705	Magnet	40	26468	Cotter Pin
12	25428	Crankshaft, Seal	26	51749	Connecting Rod Assy	41	51666	Trunnion Rod
13	25251	Washer	27	26486	Journal Bearing	42	53681	Cover, Rod Box
14	26492	Capscrew	28	25508	Crankshaft	43	26483	Setscrew
15	26484	Oil Trough	29	25132	Setscrew			

UNx™ FLUID ENDS

FEATURES AND BENEFITS

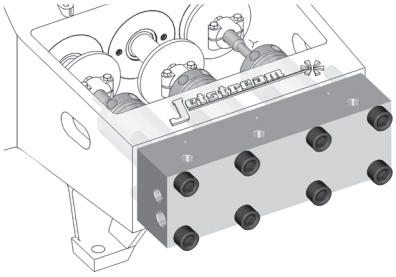

The Jetstream 15,000 psi UNx Fluid End is standard on every Jetstream 15,000 psi unit or bareshaft pump. It is also available as a conversion package for popular pump models or as an addition to an existing Jetstream 3000, 3600, 4200 or 6000 pump. Please refer to the catalog pages that follow for details on available models.

EVERY UNX FLUID END FEATURES:

SERVICEABILITY

Reduced downtime and maintenance

- Five minute packing change
- Fifteen minute pop-out valve cartridge change
- No special tools or equipment required
- Plungers clamped, NOT threaded

SIMPLICITY

- Fewer parts than other 15,000 psi fluid ends
- Uni-Valve™ one-piece cartridges include suction & discharge valves, seats, springs, and seals
- Swing-down manifold for easy access to components

VERSATILITY

- Fast in-the-field pressure range conversion with simple bolt-on Jetstream UNx Fluid Ends
- Convertibility of the UNx design allows one unit to do the work that another manufacturer would require multiple units or several hours of downtime to perform

OTHER FEATURES

- Water lubricated packing set
- Colmonoy coated plungers
- High volumetric efficiency
- All pressure-bearing components precision machined high quality stainless steel
- Pulsation dampener built into the manifold

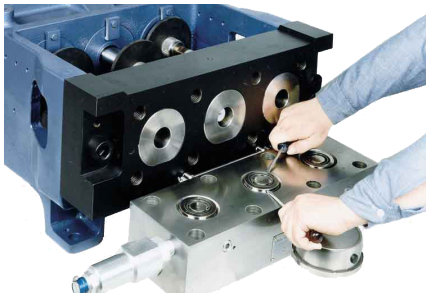

15-Minute Valve Replacement

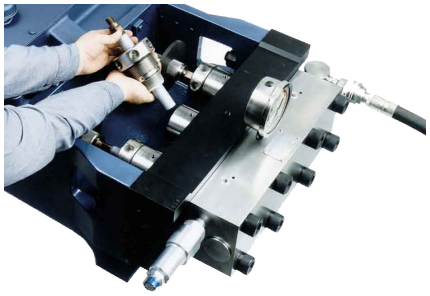

5-Minute Packing Change

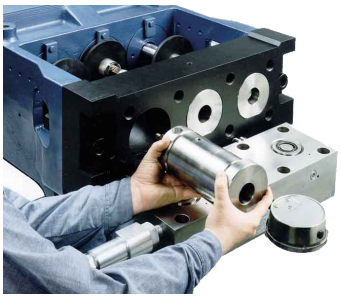

Slide-Out Stuffing Boxes

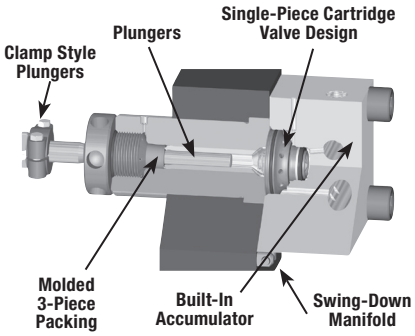

MODEL 6015 (VERSION 1)
UNX™ FLUID END
PART BREAKDOWN

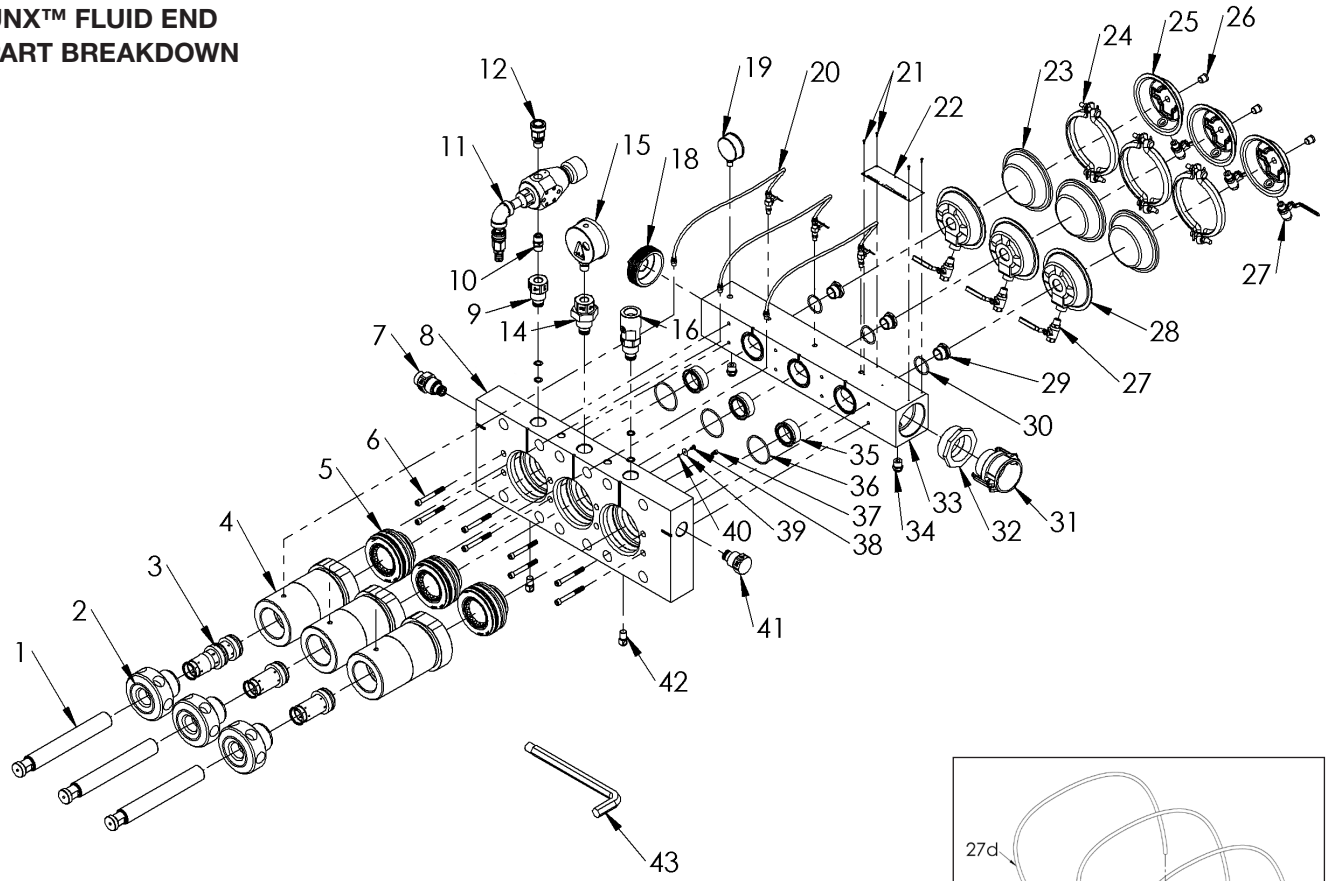

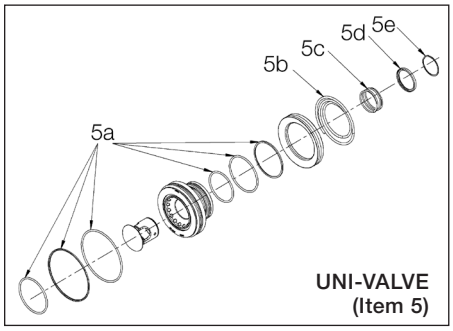

UNI-VALVE
(Item 5)

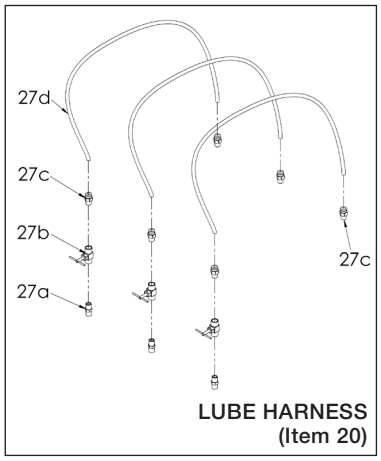

LUBE HARNESS
(Item 20)

6015 FLUID END SPECS

FLUID END PART NO.	CONNECTION TYPES*	PLUNGER SIZE			PLUNGER STROKE		MAX. CRANK SPEED RPM	MAX. FLOW		MAX. OPERATING PRESSURE	
		NO.	DIAMETER								
			in	mm	in	mm		gpm	lpm	psi	bar
62173	Jetstream HF	15	1.55	39.37	5.51	140	457	61.7	233.6	15,000	1034
62174		16	1.58	40.13				64.1	242.7	14,500	1000
62175		19	1.90	48.26				92.7	300.9	10,000	689
62176		21	2.12	53.85				115.4	436.9	8,000	551

MODEL 6015 (VERSION 1)
UNX™ FLUID END
PART BREAKDOWN

ITEM	PART NO.	DESCRIPTION
1	61916	#15 Plunger
	62125	#16 Plunger
	61917	#19 Plunger
	61918	#21 Plunger
2	62132	#15 & #16 Gland Nut
	61933	#19 Gland Nut
	61936	#21 Gland Nut
3	62178	#15 Packing Set
	62179	#16 Packing Set
	62180	#19 Packing Set
	62181	#21 Packing Set
4	62126	#15 & #16 Stuffing Box
	61922	#19 Stuffing Box
	61924	#21 Stuffing Box
5	60607	Uni-Valve
5a	62243	Uni-Valve Seal Kit
5b	60603	Discharge Spring
5c	60602	Suction Spring
5d	60451	Retainer, Suction Valve Spring
5e	60600	Retaining Ring
6	60821	Capscrew
7	60952	Adapter
8	61977	Manifold, Discharge
9	60954	Adapter
10	50488	Nipple
11	53920	Bypass Valve
12	51035	Rupture Disc Assy
13*	51053	Burst Disc 24K Psi
14	60955	Adapter Assy
15	51126	Pressure Gauge
16	61272	Rupture Disc Assembly, 6015
17*	51052	Burst Disc 20K Psi
18	60903	Plug

ITEM	PART NO.	DESCRIPTION
19	27779	Gage
20	62194	Lube Harness
20a	26465	Nipple
20b	27475	Needle Valve
20c	27732	Hose Fitting
20d	27740	Hose (order in feet)
21	26379	Screw Drive
22	26589	Plate, Caution
23	61142	Diaphragm, Pulsation Dampener
24	61143	Kit, Clamp, Pulsation Dampener
25	61141	Housing, Air Brake
26	26148	Plug
27	61145	Ball Valve
28	61264	Housing, Pulsation Dampener
29	60758	Adapter, Pulsation Dampener
30	25566	O-Ring
31	29461	Coupler
32	J70914	Bushing
33	61974	Manifold, Suction
34	62471	Adapter
35	62379	Insert, Flow Straightening
36	60611	O-Ring
37	62267	Capscrew
38	62212	Capscrew
39	60265	Washer
40	62210	Washer
41	60951	Plug Assy
42	51659	Trunnion
43	50889	Wrench,7/8 Hex Key
44*	26562	Nut
45*	27233	Capscrew
46*	62254	Deflector

*Not shown.

PUMPS & FLUID ENDS

15,000 PSI (1,034 BAR)

MODEL 6015 (VERSION 3)
UNX™ FLUID END
PART BREAKDOWN

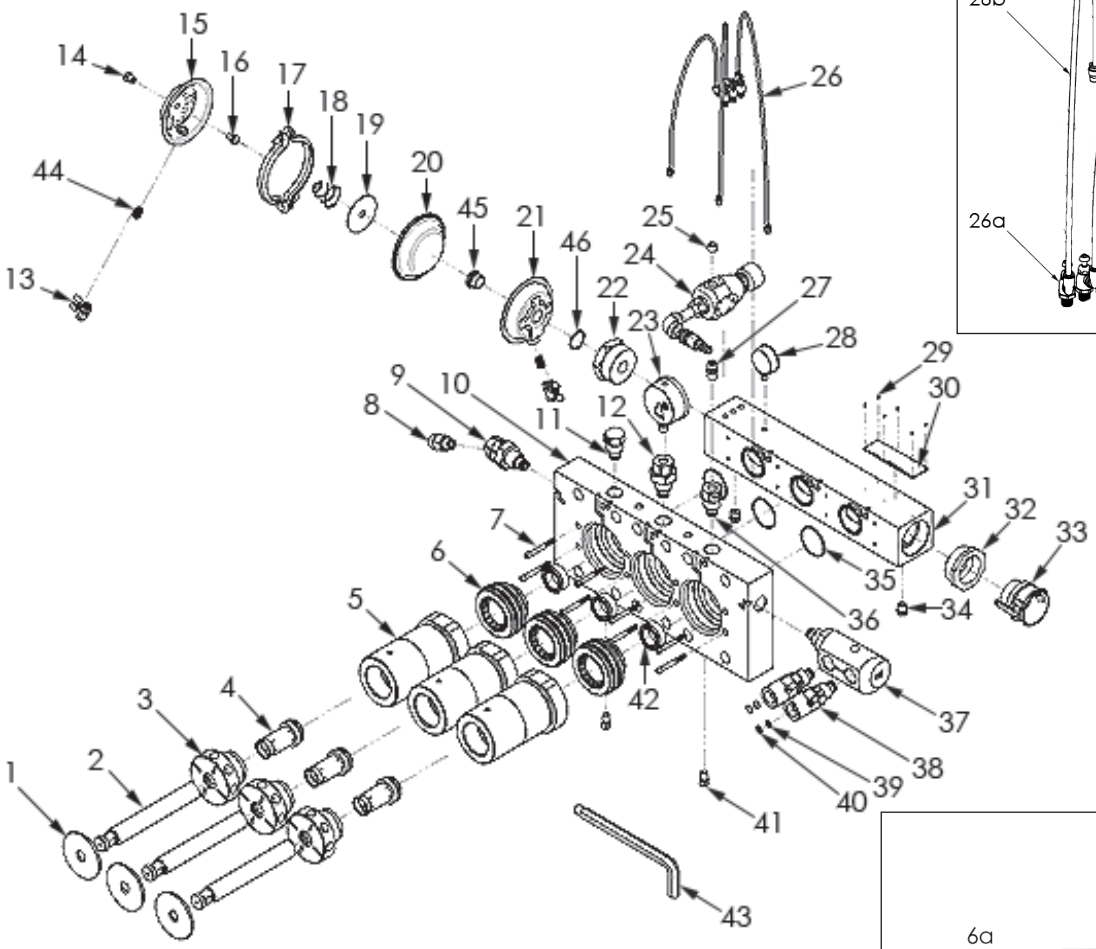

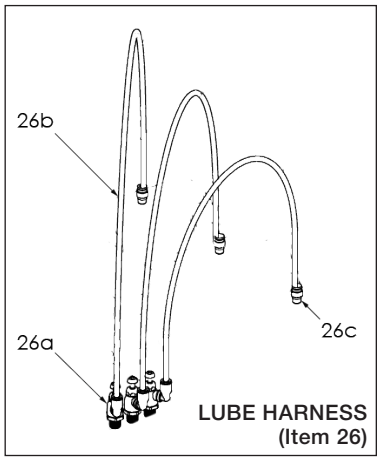

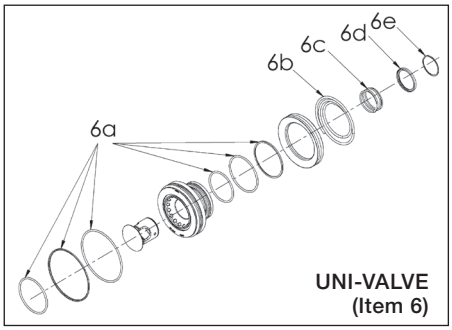

6015 FLUID END SPECS

FLUID END PART NO.	CONNECTION TYPES* (High Pressure Ports)	PLUNGER SIZE			PLUNGER STROKE		MAX. CRANK SPEED RPM	MAX. FLOW		MAX. OPERATING PRESSURE	
		NO.	DIAMETER								
			in	mm	in	mm		gpm	lpm	psi	bar
65023	Jetstream HF	15	1.55	39.37	5.51	140	457	61.7	233.6	15,000	1034
65871		16	1.58	40.13				64.1	242.7	14,500	1000
66187		19	1.90	48.26				92.7	300.9	10,000	689
66188		21	2.12	53.85				115.4	436.9	8,000	551

MODEL 6015 (VERSION 3)
UNX™ FLUID END
PART BREAKDOWN

ITEM	PART NO.	DESCRIPTION
1*	62254	Deflector
2	61916	#15 Plunger
	62125	#16 Plunger
	61917	#19 Plunger
	61918	#21 Plunger
3	62132	#15 & #16 Gland Nut
	61933	#19 Gland Nut
	61936	#21 Gland Nut
4	62178	#15 Packing Set
	62179	#16 Packing Set
	62180	#19 Packing Set
	62181	#21 Packing Set
5	62126	#15 & #16 Stuffing Box
	61922	#19 Stuffing Box
	61924	#21 Stuffing Box
6	60607	Uni-Valve
6a	62243	Uni-Valve Seal Kit
6b	60603	Discharge Spring
6c	60602	Suction Spring
6d	60451	Retainer, Suction Valve Spring
6e	60600	Retaining Ring
7	60821	Capscrew
8	28852	3/4" NPT Male Adapter x 1-5/16" Type M
9	61823	Adapter, Clockable
10	63092	Manifold, Discharge
11	60951	Plug Assy
12	60955	Adapter Assy
13	63114	Ball Valve, T-Handle
14	63178	Plug
15	61141	Housing, Air Brake
16	63179	Retainer, Conical Spring
17	61143	Kit, Clamp, Pulsation Dampener

ITEM	PART NO.	DESCRIPTION
18	63177	Spring, Conical
19	63115	Pusher, Pulsation Dampener
20	61142	Diaphragm, Pulsation Dampener
21	61264	Housing, Pulsation Dampener
22	60758	Adapter, Pulsation Dampener
23	51126	Pressure Gauge
24	53920	Bypass Valve
25	26115	Plug
26	63111	Lube Harness
26a	63019	Flow Control Valve
26a	27740	Hose (order in feet)
26c	27732	Adapter
27	50488	Nipple
28	27779	Gauge
29	26379	Screw Drive
30	26589	Plate, Caution
31	63068	Manifold, Suction
32	J70914	Bushing
33	29461	Coupler
34	62471	Adapter
35	60611	O-Ring
36	60954	Adapter
37	63057	Adapter, Dual Burst Disc
38	61272	Rupture Disc Assembly, 6015
39	Various	Standard 15K Rupture Discs
40	61271	Diffuser, Rupture Disc Holder
41	51659	Trunnion
42	62379	Insert, Flow Straightening
43	50889	Wrench,7/8 Hex Key
44	63156	Nipple
45	60758	Adapter
46	25566	O-Ring

*Power end component included in drawing for convenience. Not included with new fluid ends.

PUMPS & FLUID ENDS

15,000 PSI (1,034 BAR)

MODEL 5015Q UNX™ FLUID END PART BREAKDOWN

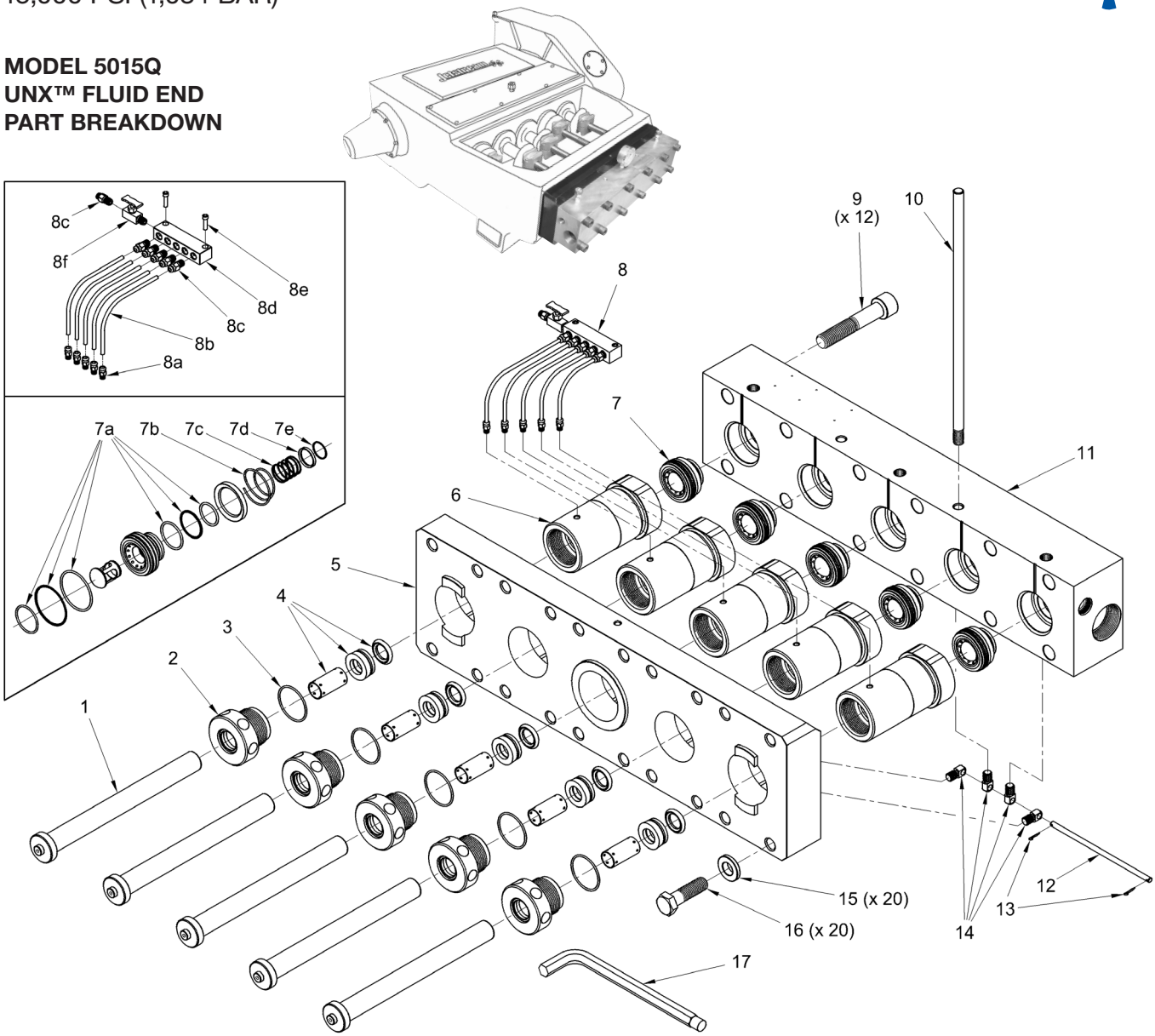

5015Q FLUID END SPECS

FLUID END PART NO.	CONNECTION TYPES		PLUNGER SIZE			PLUNGER STROKE		MAX CRANK SPEED RPM	MAXIMUM FLOW**		MAXIMUM OPERATING PRESSURE		TYPICAL DIESEL POWER	
			NO.	DIAMETER										
	TOP PORTS	DISCHARGE PORTS		in	mm	in	mm		gpm	lpm	psi	bar	hp	kW
54906	1/2"	Jetstream	#12	1.200	30.48	5.00	127	413	50.6	192	15,000	1034	490	365
54873	NPT	HHP	#15	1.500	38.10				79.1	299	10,000	689	510	380
54872	Female		#16	1.670	42.42				98.0	371	8,000	551	506	377

**Displacement (flow) values represented refer to "theoretical" flow, neglecting inefficiency resulting compressibility of water and expansion of pressure-bearing components. Specified maximum flow rates are based on selected input powers and working pressures and constrained by power end limitations (pump speed, frame load, maximum input power). Actual output may vary depending on the performance specifications of the engine (or motor), drive sheave ratio, and actual working pressure.

MODEL 5015Q
UNX™ FLUID END
PART BREAKDOWN

ITEM	PART NO.	DESCRIPTION
1	54631	#12 Plunger
	54629	#15 Plunger
	54851	#16 Plunger
2	51707	#12 Gland Nut
	51746	#15 Gland Nut
	53316	#16 Gland Nut
3	26387	O-Ring, #12,#15 Gland Nut
	26930	O-Ring, #16 Gland Nut
4	50660	#12 Packing Set
	50662	#15 Packing Set
	53321	#16 Packing Set
5*	54627	Adapter Plate
6	54628	#12 & #15 Stuffing Box
	54849	#16 Stuffing Box
7	52870	Uni-Valve
7a	52875	Uni-Valve Seal Kit
7b	27119	Discharge Valve Spring
7c	27118	Suction Valve Spring

ITEM	PART NO.	DESCRIPTION
7d	52879	Spring Retainer
7e	52878	Retaining Ring
8*	54690	Lube Harness Assy
8a*	27732	Tube Fitting, 1/8" NPT
8b*	27740	Hose (order in feet)
8c*	J70518	Tube Fitting, 1/4" NPT
8d*	52494	Lube Manifold
8e*	26689	Capscrew
8f*	26876	Needle Valve
9*	26500	Manifold Bolt
10*	52114	Lifting Rod
11	54626	Manifold
12*	50295	Trunnion Rod
13*	26468	Cotter Pin
14	51659	Trunnion
15*	54638	Washer
16*	60248	Adapter Plate Bolt
17	50889	Pump Wrench

*Pre-existing component included in drawing for convenience. Not included with new fluid ends.

REPLACEABLE POWER END PARTS**

PART NO.	DESCRIPTION
29623	Oil Seal (inside plate)
29891	NOV Wiper (inside plate)
70039	Seal Plate
29630	Gasket (to seal plate)
59318	Seal Washer (holds seal plate)
58279	Hook Belts
29889	Pony Rod
29427	Plunger Clamps

** Parts not shown.

MODELS 4215HF & 3615HF UNX™ FLUID END PART BREAKDOWN

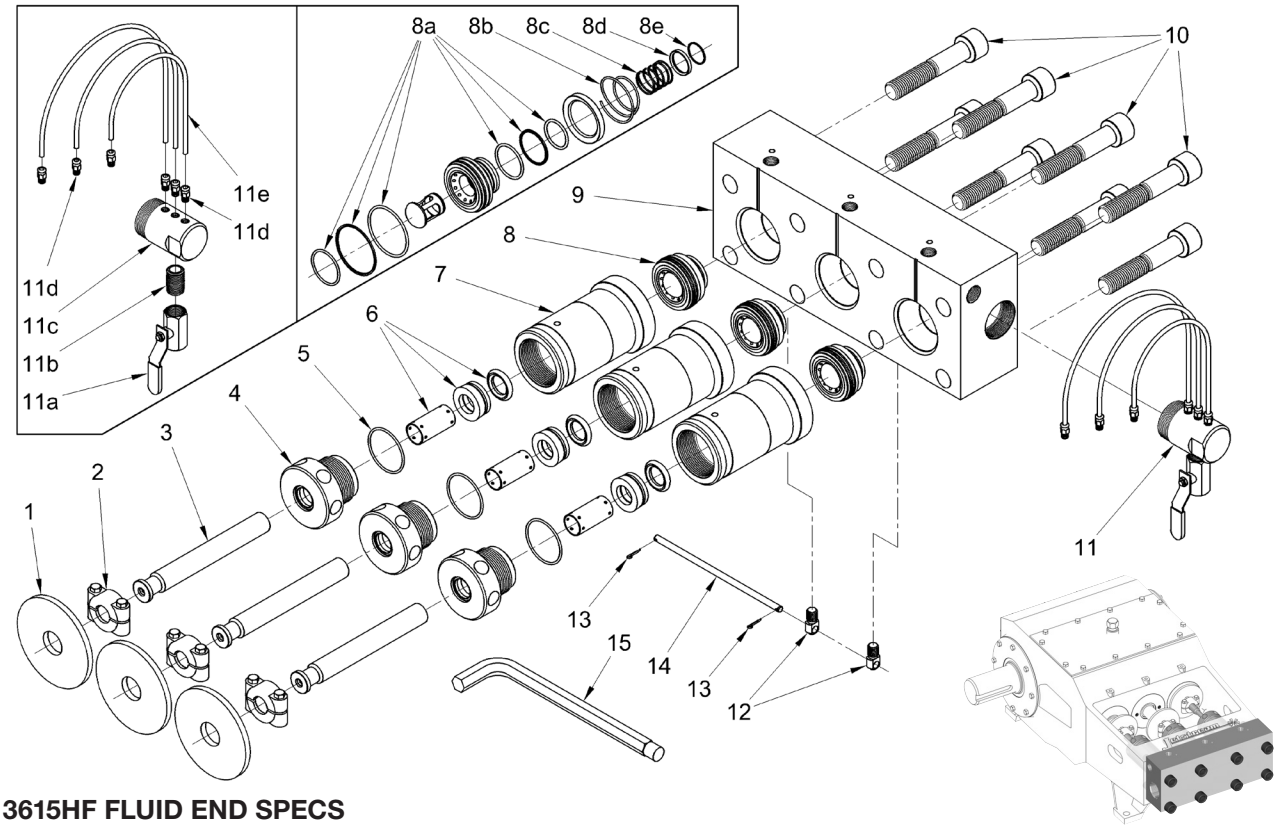

3615HF FLUID END SPECS

FLUID END PART NO.	CONNECTION TYPES		PLUNGER SIZE			PLUNGER STROKE		MAX. RPM	MAXIMUM FLOW		MAXIMUM OPERATING PRESSURE		TYPICAL DIESEL POWER	
			NO.	DIAMETER										
	TOP PORTS	DISCHARGE PORTS		in	mm	in	mm		gpm	lpm	psi	bar	hp	kW
53085	1/2" NPT Female	3/4" NPT Female	#9	.900	22.86	3.60	92	550	16.4	62	15,000	1034	158	118
53090			#10	.980	24.89			550	19.4	73	15,000	1034	188	140
53095			#11	1.100	27.94			550	24.4	92	12,500	861	197	147
53100			#12	1.200	30.48			550	29.1	110	10,000	689	188	140
53105			#13	1.335	33.91			550	36.0	136	8,000	551	186	139
53110			#15	1.500	38.10			550	45.5	172	6,500	469	191	142

4215HF FLUID END SPECS

FLUID END PART NO.	CONNECTION TYPES		PLUNGER SIZE			PLUNGER STROKE		MAX. RPM	MAXIMUM FLOW		MAXIMUM OPERATING PRESSURE		TYPICAL DIESEL POWER	
			NO.	DIAMETER										
	TOP PORTS	DISCHARGE PORTS		in	mm	in	mm		gpm	lpm	psi	bar	hp	kW
53090	1/2" NPT Female	3/4" NPT Female	#10	.980	24.89	4.25	108	518	21.5	81	15,000	1034	209	156
53095			#11	1.100	27.94			518	27.1	102	15,000	1034	263	196
53100			#12	1.200	30.48			518	32.3	122	15,000	1034	313	233
53105			#13	1.335	33.91			518	40.0	151	12,500	861	323	241
53110			#15	1.500	38.10			518	50.5	191	10,000	689	326	243
53330			#16	1.670	42.42			518	62.6	237	8,000	551	323	241
63794			#18	1.810	45.97			518	73.5	278	6,800	469	323	241

Jetstream® Subsidiary of Federal Signal Corporation

MODELS 4215HF & 3615HF UNX™ FLUID END PART BREAKDOWN

ITEM	PART NO.	DESCRIPTION
1*	26487	Deflector
2*	51736	Plunger Coupling
3**	51808	#9 Plunger
	51721	#10 Plunger
	51722	#11 Plunger
	51723	#12 Plunger
	51724	#13 Plunger
	51726	#15 Plunger
	53314	#16 Plunger
	63765	#18 Plunger
4	51809	#9 Gland Nut
	51647	#10 Gland Nut
	51651	#11 Gland Nut
	51707	#12 Gland Nut
	51744	#13 Gland Nut
	51746	#15 Gland Nut
	53316	#16 Gland Nut
	63768	#18 Gland Nut
5	26387	O-Ring (#9 to #15, #18 Gland Nut)
	26930	O-Ring (#16 Gland Nut)
6	51802	#9 Packing Set
	50658	#10 Packing Set
	50659	#11 Packing Set
	50660	#12 Packing Set
	50661	#13 Packing Set
	50662	#15 Packing Set
	53321	#16 Packing Set
	61124/63793	#18 Packing Set (standard/1-piece)

ITEM	PART NO.	DESCRIPTION
7	52872	#9, #10 & #11 Stuffing Box
	52873	#12, #13 & #15 Stuffing Box
	53313	#16 Stuffing Box
	63767	#18 Stuffing Box
8	52870	Uni-Valve
8a	52875	Uni-Valve Seal Kit
8b	27119	Discharge Valve Spring
8c	27118	Suction Valve Spring
8d	52879	Spring Retainer
8e	52878	Retaining Ring
9	52864	Manifold
10*	26500	Manifold Bolt
11	51975	Lube Harness
11a	27101	Ball Valve
11b	25946	Nipple
11c	55477	Lube Manifold
11d	27732	Hose Fitting
11e	27740	Hose (Order in feet)
12	51659	Trunnion
13*	26468	Cotter Pin
14*	50295	Trunnion Rod
15	50889	Pump Wrench
16***	71147-FE	Warning Decals, FE Only
17***	62172-GRN	Manifold Decals
	**Optional Ceramic Plungers	
	51721C	#10 Plunger, Ceramic
	51722C	#11 Plunger, Ceramic
	51723C	#12 Plunger, Ceramic
	51724C	#13 Plunger, Ceramic
	51726C	#15 Plunger, Ceramic

*Power end component included in drawing for convenience. Not included with new fluid ends.

**Optional Ceramic Plungers available.

***Not Shown

NOTE: Parts listed on this page are components of current 4215HF & 3615HF fluid end models. For first generation fluid end models which utilize different stuffing boxes, valves and manifold, see the following page. “HF” and first generation models can be most easily distinguished by the part number stamped on the top face of the fluid end manifold. Current (HF) models use manifold part number 52864 while first generation fluid ends use manifold part number 50896.

MODELS 4215 & 3615 (GEN 1)
UNX™ FLUID END
PART BREAKDOWN

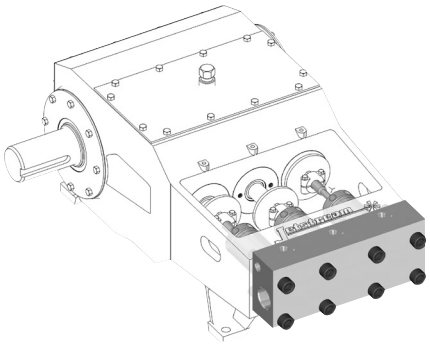

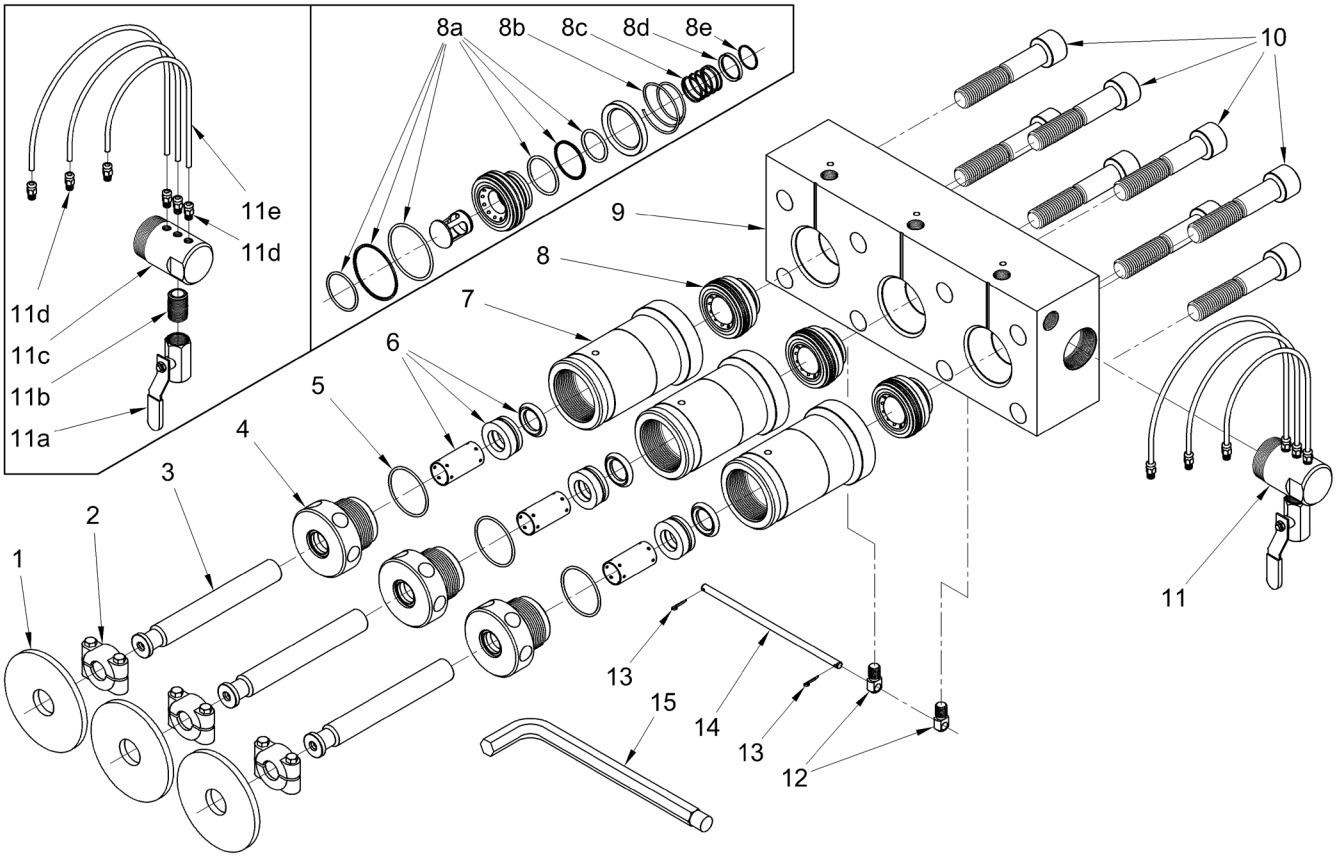

MODELS 4215 & 3615 (GEN 1)
UNX™ FLUID END
PART BREAKDOWN

ITEM	PART NO.	DESCRIPTION
1*	26487	Deflector
2*	51736	Plunger Coupling
3	51808	#9 Plunger
	51721	#10 Plunger
	51722	#11 Plunger
	51723	#12 Plunger
	51724	#13 Plunger
	51726	#15 Plunger
4	51809	#9 Gland Nut
	51647	#10 Gland Nut
	51651	#11 Gland Nut
	51707	#12 Gland Nut
	51744	#13 Gland Nut
	51746	#15 Gland Nut
5	26387	O-Ring
6	51802	#9 Packing Set
	50658	#10 Packing Set
	50659	#11 Packing Set
	50660	#12 Packing Set
	50661	#13 Packing Set
	50662	#15 Packing Set

ITEM	PART NO.	DESCRIPTION
7	50297	#9, #10 & #11 Stuffing Box
	50299	#12, #13 & #15 Stuffing Box
8	50365	Uni-Valve
8a	50370	Uni-Valve Seal Kit
8b	25060	Discharge Valve Spring
8c	25059	Suction Valve Spring
8d	50303	Spring Retainer
8e	25255	Retaining Ring
9	50896	Manifold
10*	26500	Manifold Bolt
11	51975	Lube Harness
11a	27101	Ball Valve
11b	25946	Nipple
11c	55477	Lube Manifold
11d	27732	Hose Fitting
11e	27740	Hose (Order in feet)
12	51659	Trunnion
13*	26468	Cotter Pin
14*	50295	Trunnion Rod
15	50889	Pump Wrench

*Power end component included in drawing for convenience. Not included with new fluid ends.

NOTE: Parts listed on this page are components of first generation 4215 & 3615 fluid end models no longer sold. These models utilize different stuffing boxes, valve and manifold than the current "HF" design. "HF" and first generation models can be most easily distinguished by the part number stamped on the top face of the fluid end manifold. Current (HF) models use manifold part number 52864 while the first generation fluid ends featured on this page use manifold part number 50896.

PUMPS & FLUID ENDS

15,000 PSI (1,034 BAR)

MODEL 3015 UNX™ FLUID END PART BREAKDOWN

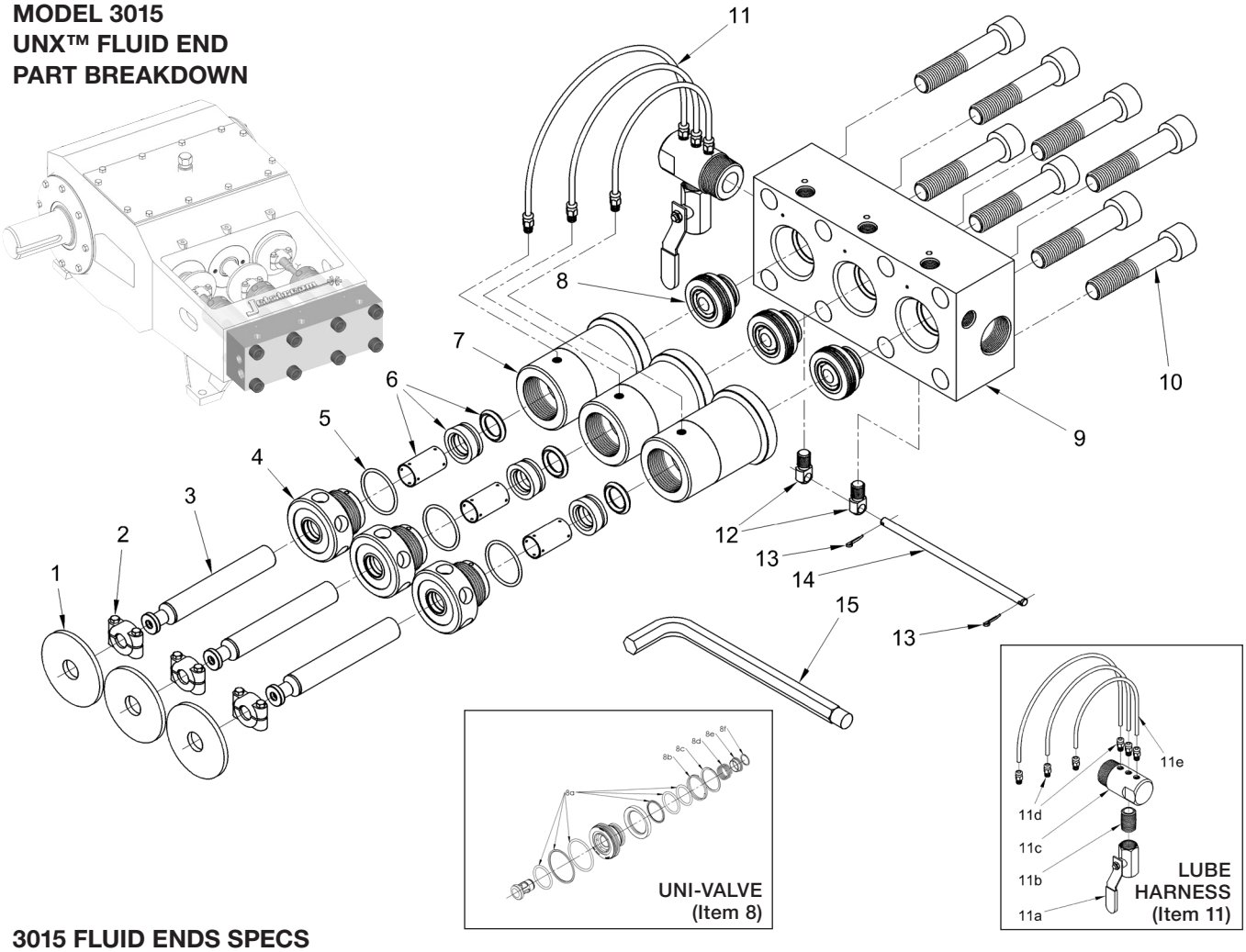

3015 FLUID ENDS SPECS

FLUID END PART NO.	CONNECTION TYPES*			PLUNGER SIZE			PLUNGER STROKE		MAX. RPM	MAXIMUM FLOW		MAXIMUM OPERATING PRESSURE		TYPICAL DIESEL POWER	
	DISCHARGE PORTS	TOP PORTS (ACCESSORY)	SUPPLY PORT	NO.	DIAMETER in	DIAMETER mm	in	mm		gpm	lpm	psi	bar	hp	kW
52055	1/2″ NPT Female	1/2″ NPT Female	1 1/2″ NPT Female	#7	.735	18.67	3.00	76	600	9.9	37	15,000	1034	96	72
52060				#8	.800	20.32			600	11.8	45	15,000	1034	114	85
									600	11.8	45	12,500	861	95	71
52065				#9	.900	22.86			600	14.9	56	15,000	1034	144	107
									600	14.9	56	13,000	896	125	93
									600	14.0	6	10,000	689	96	72
52070				#10	1.000	25.40			600	18.4	70	12,500	861	148	110
									600	18.4	70	10,000	689	118	88
									600	18.4	70	8,000	551	95	71
52270				#11	1.125	28.58			600	23.2	88	10,000	689	150	112
									600	23.2	88	8,000	551	120	89
									600	23.2	88	6,500	448	97	72

**Displacement (flow) values represented refer to "theoretical" flow, neglecting inefficiency resulting compressibility of water and expansion of pressure-bearing components. Performance data is based on power end specifications published by the original equipment manufacturer; however, some power ends may differ from those used to determine the values above. Contact a Jetstream Solutions Provider for help with fluid end selection.

MODEL 3015
UNX™ FLUID END
PART BREAKDOWN

ITEM	PART NO.	DESCRIPTION
1*	26623	Deflector
2*	51737	Plunger Coupling
3**	51831	#7 Plunger
	51741	#8 Plunger
	51742	#9 Plunger
	51743	#10 Plunger
	52229	#11 Plunger
4	51617	#7 Gland Nut
	51619	#8 Gland Nut
	51621	#9 Gland Nut
	51623	#10 Gland Nut
	52231	#11 Gland Nut
5	26416	O-Ring
6	51689	#7 Packing Set
	51691	#8 Packing Set
	51674	#9 Packing Set
	51697	#10 Packing Set
	52233	#11 Packing Set
7	51611	#7, #8 Stuffing Box
	51671	#9, #10 Stuffing Box
	52232	#11 Stuffing Box
8	51675	Uni-Valve
8a	50034	Uni-Valve Seal Kit

ITEM	PART NO.	DESCRIPTION
8b	26476	Discharge Valve Spring
8c	26470	Retaining Ring
8d	26472	Suction Valve Spring
8e	51664	Spring Retainer
8f	26474	Retaining Ring
9	51672	Manifold
10*	26462	Manifold Bolt
11	51970	Lube Harness
11a	27101	Ball Valve
11b	25946	Nipple
11c	53242	Lube Manifold
11d	26874	Hose Fitting
11e	27740	Hose (Order in feet)
12	51659	Trunnion
13*	26468	Cotter Pin
14*	51666	Trunnion Rod
15	50064	Pump Wrench
16***	71147-FE	Warning Decals, FE Only
17***	62171-GRN	Manifold Decals
	**Optional Ceramic Plungers	
	51741C	#8 Plunger, Ceramic
	51742C	#9 Plunger, Ceramic
	51743C	#10 Plunger, Ceramic

*Power end component included in drawing for convenience. Not included with new fluid ends.
**Optional Ceramic Plungers available. See below #17.
***Not Shown

UNx™ FLUID END UPGRADES

Jetstream has created a wide variety of UNx Fluid Ends conversions to adapt to your existing competitor pump. The upgrade delivers all of the benefits of the UNx Fluid End design with the additional benefit that couples our fluid end to your current competitor pump. These benefits include and are not limited to:

- Pressures from 5,000 psi to 40,000 psi
- Superior performance to optimize productivity
- Greater flexibility in the field
- Quick serviceability reducing downtime and maintenance in the field
- Most major competitor conversions available
- Easily converted while on the job
- Water lubricated packing set

See UNx Features and Benefits on page B-15. Contact your Jetstream or inquiries on questions regarding the upgrade required.

JETSTREAM FLUID END CONVERSIONS

FLUID END PART NO.	FLUID END MODEL	DESCRIPTION	MANUFACTURER	MANUFACTURER MODEL
51700	3015B	#7 Triplex	Butterworth/Gardner Denver	T-300, L-300, L-74, I-300, PT-33
51705	3015B	#8 Triplex		
51710	3015B	#9 Triplex		
51715	3015B	#10 Triplex		
52290	3015B	#11 Triplex		
52225	3715B	#9 Triplex	Butterworth/Gardner Denver	L-375, T-375, I-375, TF-375, L-130, TF-375, TX-375, TX-3750H
52230	3715B	#10 Triplex		
52235	3715B	#11 Triplex		
52240	3715B	#12 Triplex		
52245	3715B	#13 Triplex		
59405	3715B	#15 Triplex		
51950	4015B	#9 Triplex	Butterworth/Gardner Denver	L-77
51865	4015B	#10 Triplex		
51870	4015B	#11 Triplex		
51875	4015B	#12 Triplex		
51880	4015B	#13 Triplex		
51840	4515HF B	#10 Triplex	Butterworth/Gardner Denver	L-450, T-450, TF-450, L-200
51845	4515HF B	#11 Triplex		
51850	4515HF B	#12 Triplex		
51855	4515HF B	#13 Triplex		
51860	4515HF B	#15 Triplex		
J55775	4515B	#16 Triplex		
52170	5015G	#15 Triplex	Gardner Denver	PE-5, P172
52185	5015G	#17 Triplex		
51720	3015N	#7 Triplex	NLB Union	1012C, 1012D TD-60 (Power End)
51725	3015N	#8 Triplex		
51730	3015N	#9 Triplex		
51735	3015N	#10 Triplex		
52265	3015N	#11 Triplex		

JETSTREAM FLUID END CONVERSIONS CONTINUED				
FLUID END PART NO.	FLUID END MODEL	DESCRIPTION	MANUFACTURER	MANUFACTURER MODEL
51800	4215N	#10 Triplex	NLB	10150, 10200, 10225, 10203, 20153, 20156, 20203, 20225, 24155, 24205, 24225, 40201, TD-120
51805	4215N	#11 Triplex		
51285	4215N	#12 Triplex		
51810	4215N	#13 Triplex		
51815	4215N	#15 Triplex		
J55720	4215N	#16 Triplex		
53555	4215QN	#10 Quintuplex	NLB	10250, 20253, 36250, QD-200(Power End)
53560	4215QN	#11 Quintuplex		
53565	4215QN	#12 Quintuplex		
53585	4215QN	#13 Quintuplex		
53575	4215QN	#15 Quintuplex		
52755	3115T	#7 Triplex	Tritan	3310SS, 3310WSS, P-313, P-323, P-330A
52760	3115T	#8 Triplex		
52765	3115T	#9 Triplex		
52770	3115T	#10 Triplex		
51915	3515Q	#7 Quintuplex	Tritan/Wheatley	5127SS
51920	3515Q	#8 Quintuplex		
51925	3515Q	#9 Quintuplex		
51930	3515Q	#10 Quintuplex		
51740	3015W	#7 Triplex	Weatherford	FE85
51745	3015W	#8 Triplex		
51750	3015W	#9 Triplex		
51755	3015W	#10 Triplex		
52280	3015W	#11 Triplex		
65187	3715W	#7 Triplex	Woma	1502, 1503
54560	3715W	#8 Triplex		
54555	3715W	#9 Triplex		
54550	3715W	#10 Triplex		
54545	3715W	#11 Triplex		
55270	3715WZ	#8 Triplex	Woma	150-Z
55275	3715WZ	#9 Triplex		
55280	3715WZ	#10 Triplex		
55285	3715WZ	#11 Triplex		
51820	3015Q	#7 Quintuplex	American Aero / Whitford	FE145
51825	3015Q	#8 Quintuplex		
51830	3015Q	#9 Quintuplex	NLB	10125
51835	3015Q	#10 Quintuplex	Union	QD100 (Power End)
52285	3015Q	#11 Quintuplex		

INTERNATIONAL STYLE CONVERSIONS

INTERNATIONAL STYLE JETSTREAM FLUID END CONVERSIONS				
FLUID END PART NO.	FLUID END MODEL	DESCRIPTION	MANUFACTURER	EURO MODEL INCLUDES
55338	3015	#7 Triplex	Jetstream	Euro Lube Harness Dual Scale Gauge Euro Regulator Valve Pump Accessory Package Spare Parts & Tools Package
55186	3015J	#8 Triplex		
55339	3015	#9 Triplex		
55340	3015	#10 Triplex		
55341	3015	#11 Triplex		
55343	3615	#9 Triplex		
55190	3615J HF	#10 Triplex		
55344	3615	#11 Triplex		
55345	3615	#12 Triplex		
55346	3615	#13 Triplex		
55347	3615	#15 Triplex		
55348	3615	#16 Triplex		
55351	4215	#9 Triplex		
55352	4215	#10 Triplex		
55194	4215J HF	#11 Triplex		
55198	4215J HF	#12 Triplex		
55353	4215	#13 Triplex		
55354	4215	#15 Triplex		
57345	4215J HF	#15 Triplex		
55355	4215	#16 Triplex		

Detailed breakdowns to follow on pages B-32 to B-75.

BUTTERWORTH/ GARDNER DENVER UPGRADES

UNx™ FLUID END UPGRADE – MODEL 3015B

BUTTERWORTH | GARDNER-DENVER
T-300, L-300, L-74, I-300, PT-33 PUMPS

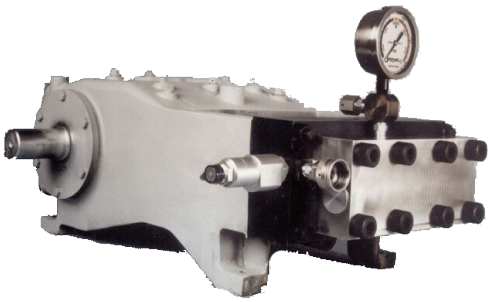

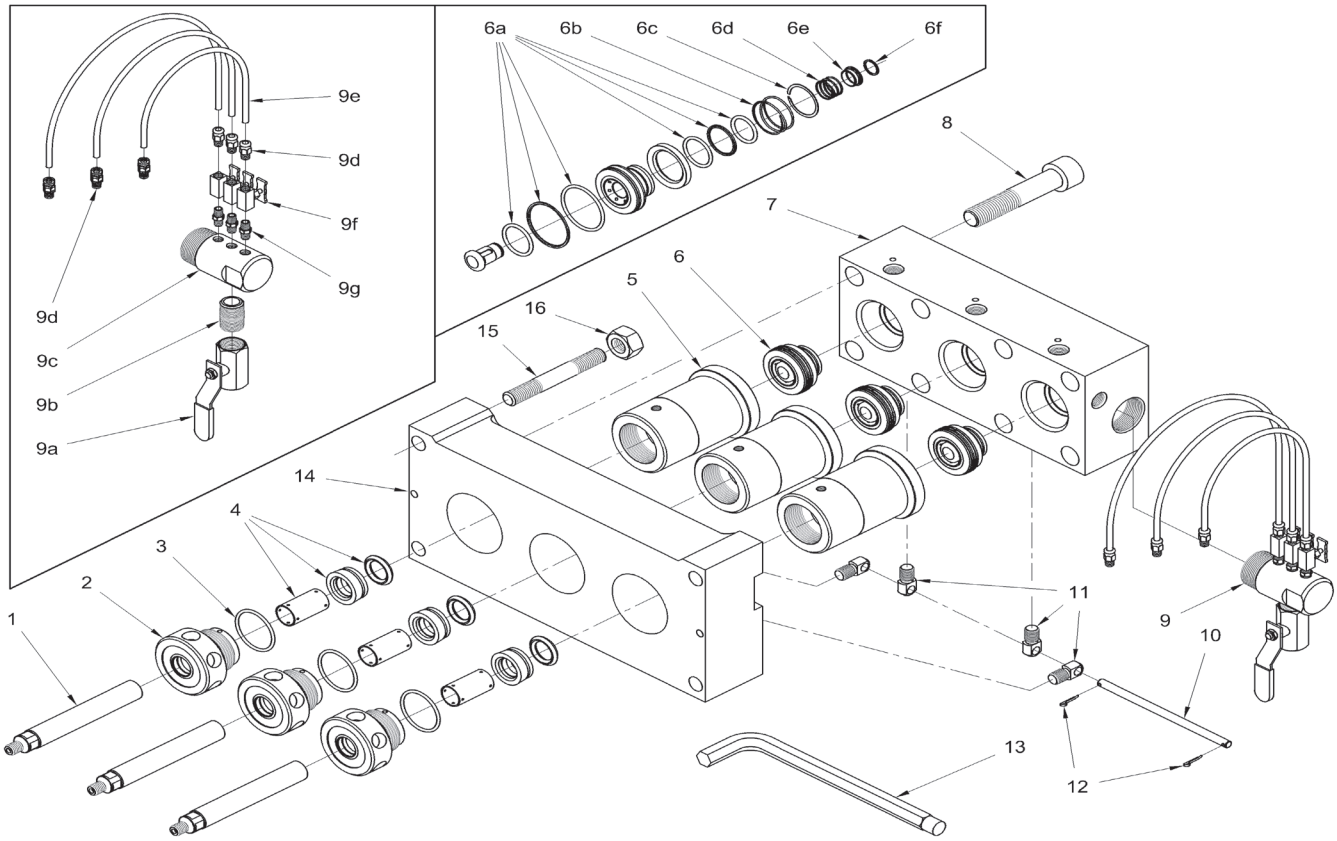

FLUID END SPECS

PART NO.	PLUNGER SIZE			CONNECTION TYPES**											MAX. OPERATING PRESSURE	
	NO.	DIAMETER					200 RPM		300 RPM		400 RPM		500 RPM			
		in	mm	TOP PORTS	DISCHARGE PORTS	SUPPLY PORTS	gpm	lpm	gpm	lpm	gpm	lpm	gpm	lpm	psi	bar
51700	#7	.735	18.67	1/2" NPT Female	1/2" NPT Female	1 - 1/2" NPT Female	5.0	19	6.6	25	8.3	31	9.9	37	15,000	1034
51705	#8	.800	20.32				5.9	22	7.8	30	9.8	37	11.8	45	12,500	861
51710	#9	.900	22.86				7.4	28	9.9	38	12.4	47	14.9	56	10,000	689
51715	#10	1.000	25.40				9.2	35	12.2	46	15.3	58	18.4	70	8,000	551
52290	#11	1.125	28.50				11.6	44	15.5	59	19.4	73	23.2	88	6,000	413

*Displacement (flow) values represented refer to "theoretical" flow, neglecting inefficiency resulting compressibility of water and expansion of pressure-bearing components. Performance data is based on power end specifications published by the original equipment manufacturer; however, some power ends may differ those used to determine the values above. Contact a Jetstream Solutions Provider for help with fluid end selection.

UNx™ FLUID END UPGRADE – MODEL 3015B
BUTTERWORTH | GARDNER-DENVER
T-300, L-300, L-74, I-300, PT-33 PUMPS

PART BREAKDOWN

ITEM	PART NO.	DESCRIPTION
1	51690	#7 Plunger
	51696	#8 Plunger
	51667	#9 Plunger
	51694	#10 Plunger
	52983	#11 Plunger
2	51617	#7 Gland Nut
	51619	#8 Gland Nut
	51621	#9 Gland Nut
	51623	#10 Gland Nut
	52231	#11 Gland Nut
3	56416	O-Ring
4	51689	#7 Packing Set
	51691	#8 Packing Set
	51674	#9 Packing Set
	51697	#10 Packing Set
	52233	#11 Packing Set
5	51611	#7, #8 Stuffing Box
	51671	#9, #10 Stuffing Box
	52232	#11 Stuffing Box
6	51675	Uni-Valve
6a	50034	Uni-Valve Seal Kit
6b	26476	Discharge Valve Spring

*Not Shown

ITEM	PART NO.	DESCRIPTION
6c	26470	Retaining Ring
6d	26472	Suction Valve Spring
6e	51664	Spring Retainer
6f	26474	Retaining Ring
7	51672	Manifold
8	26462	Manifold Bolt
9	51695	Lube Harness
9a	27101	Ball Valve
9b	25946	Nipple
9c	53242	Lube Manifold
9d	27732	Hose Fitting
9e	27740	Hose (Order in feet)
9f	27475	Needle Valve
9g	26465	Nipple
10	51666	Trunnion Rod
11	51659	Trunnion
12	26468	Cotter Pin
13	50064	Pump Wrench
14	51673	Adapter Plate
15	26473	Adapter Plate Stud
16	25706	Adapter Plate Nut
17*	62171-GRN	Manifold Decal

UNx™ FLUID END UPGRADE – MODEL 3715B

BUTTERWORTH | GARDNER-DENVER L-375, T-375, I-375, TF-375, L-130, TF-375, TX-375, TX-3750H PUMPS

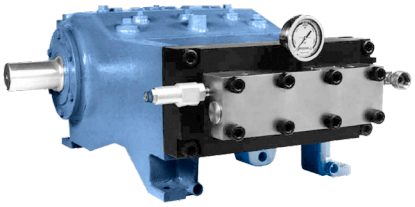

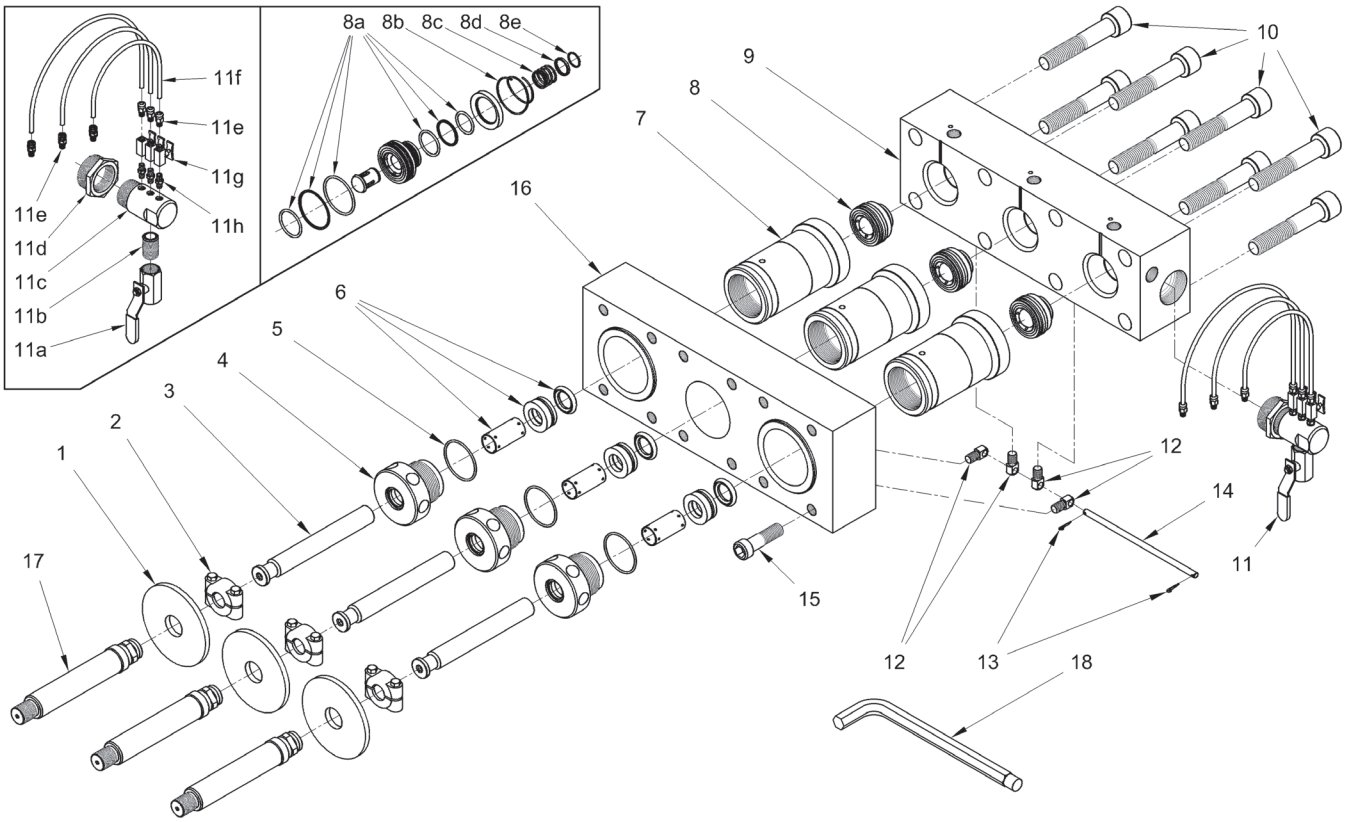

FLUID END SPECS

PART NO.	PLUNGER SIZE			CONNECTION TYPES**											MAX. OPERATING PRESSURE	
	NO.	DIAMETER					300 RPM		400 RPM		500 RPM		575 RPM			
		in	mm	TOP PORTS	DISCHARGE PORTS	SUPPLY PORTS	gpm	lpm	gpm	lpm	gpm	lpm	gpm	lpm	psi	bar
52225	#9	.900	22.86	3/4" NPT Female	1/2" NPT Female	2" NPT Female	9.3	35	12.4	47	15.5	59	17.8	67	15,000	1034
52230	#10	.980	24.89				11.0	42	14.7	56	18.4	70	21.1	80	12,500	861
52235	#11	1.100	27.94				13.9	53	18.5	70	23.2	88	26.6	101	10,000	689
52240	#12	1.200	30.48				16.5	63	22.0	83	27.6	104	31.7	120	8,000	551
52245	#13	1.335	33.91				20.5	77	27.3	103	34.1	129	39.2	148	6,000	413

**Displacement (flow) values represented refer to "theoretical" flow, neglecting inefficiency resulting compressibility of water and expansion of pressure-bearing components. Performance data is based on power end specifications published by the original equipment manufacturer; however, some power ends may differ those used to determine the values above. Contact a Jetstream Solutions Provider for help with fluid end selection.

UNx™ FLUID END UPGRADE – MODEL 3715B
BUTTERWORTH | GARDNER-DENVER
L-375, T-375, I-375, TF-375, L-130, TF-375, TX-375, TX-3750H PUMPS

PART BREAKDOWN

ITEM	PART NO.	DESCRIPTION
1	26487	Deflector
2	51736	Plunger Coupling
3	51808	#9 Plunger
	51721	#10 Plunger
	51722	#11 Plunger
	51723	#12 Plunger
	51724	#13 Plunger
4	51809	#9 Gland Nut
	51647	#10 Gland Nut
	51651	#11 Gland Nut
	51707	#12 Gland Nut
	51744	#13 Gland Nut
5	26387	O-Ring
6	51802	#9 Packing Set
	50658	#10 Packing Set
	50659	#11 Packing Set
	50660	#12 Packing Set
	50661	#13 Packing Set
7	50297	#9, #10, #11 Stuffing Box
	50299	#12, #13 Stuffing Box
8	50365	Uni-Valve
8a	50370	Uni-Valve Seal Kit
8b	25060	Discharge Valve Spring

* Not shown.

ITEM	PART NO.	DESCRIPTION
8c	25059	Suction Valve Spring
8d	50303	Spring Retainer
8e	25255	Retaining Ring
9	52194	Manifold
10	25607	Manifold Bolt
11	51955	Lube Harness
11a	27101	Ball Valve
11b	25946	Nipple
11c	53242	Lube Manifold
11d	26802	Reducing Bushing
11e	27732	Hose Fitting
11f	27740	Hose (Order in feet)
11g	27475	Needle Valve
11h	26465	Nipple
12	51659	Trunnion
13	26468	Cotter Pin
14	50295	Trunnion Rod
15	26220	Adapter Plate Bolt
16	52197	Adapter Plate
17	52196	Plunger Adapter
18	50889	Pump Wrench
19*	62171-GRN	Manifold Decal

UNx™ FLUID END UPGRADE – MODEL 4015B

BUTTERWORTH | GARDNER-DENVER L-77 PUMP

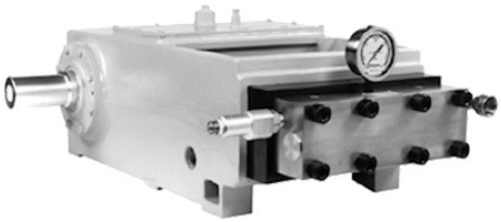

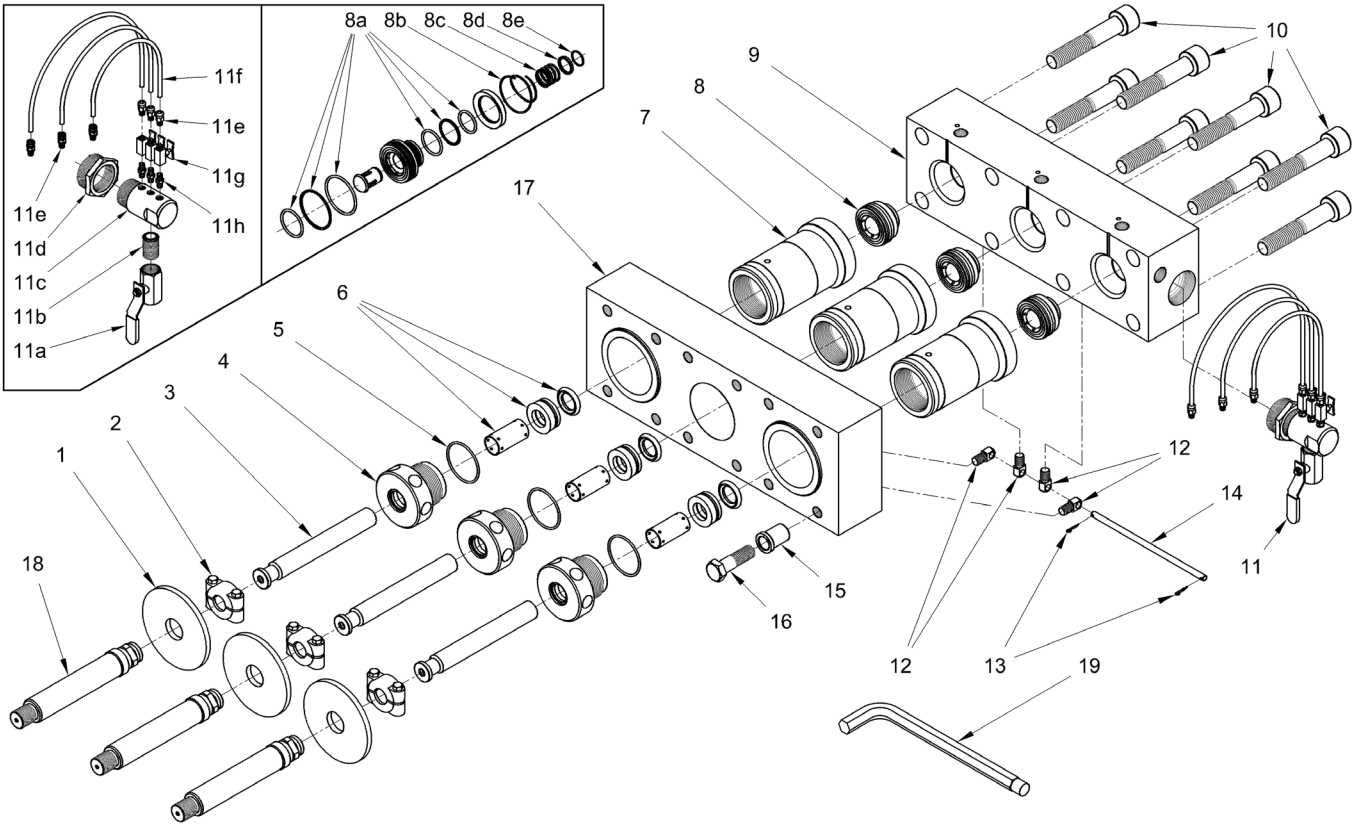

FLUID END SPECS

PART NO.	PLUNGER SIZE			CONNECTION TYPES**			200 RPM		300 RPM		400 RPM		500 RPM		MAX. OPERATING PRESSURE	
	NO.	DIAMETER														
		in	mm	TOP PORTS	DISCHARGE PORTS	SUPPLY PORTS	gpm	lpm	gpm	lpm	gpm	lpm	gpm	lpm	psi	bar
51950	#9	.900	22.86	3/4" NPT Female	1/2" NPT Female	2" NPT Female	6.6	25	9.9	38	13.2	50	16.5	63	15,000	1034
51865	#10	.980	24.89				11.8	45	15.7	59	19.6	74	19.6	74	12,500	861
51870	#11	1.100	27.94				14.8	56	19.8	75	24.7	93	24.7	93	10,000	689
51875	#12	1.200	30.48				17.6	67	23.5	89	29.4	111	29.2	111	8,000	551
51880	#13	1.335	33.91				21.8	83	29.1	110	36.4	138	36.4	138	6,000	413

**Displacement (flow) values represented refer to "theoretical" flow, neglecting inefficiency resulting compressibility of water and expansion of pressure-bearing components. Performance data is based on power end specifications published by the original equipment manufacturer; however, some power ends may differ those used to determine the values above. Contact a Jetstream Solutions Provider for help with fluid end selection.

UNx™ FLUID END UPGRADE – MODEL 4015B
BUTTERWORTH | GARDNER-DENVER
L-77 PUMP

PART BREAKDOWN

ITEM	PART NO.	DESCRIPTION
1	26487	Deflector
2	51736	Plunger Coupling
3	51808	#9 Plunger
	51721	#10 Plunger
	51722	#11 Plunger
	51723	#12 Plunger
	51724	#13 Plunger
4	51809	#9 Gland Nut
	51647	#10 Gland Nut
	51651	#11 Gland Nut
	51707	#12 Gland Nut
	51744	#13 Gland Nut
5	26387	O-Ring
6	51802	#9 Packing Set
	50658	#10 Packing Set
	50659	#11 Packing Set
	50660	#12 Packing Set
	50661	#13 Packing Set
7	50297	#9, #10, #11 Stuffing Box
	50299	#12, #13 Stuffing Box
8	50365	Uni-Valve
8a	50370	Uni-Valve Seal Kit
8b	25060	Discharge Valve Spring

ITEM	PART NO.	DESCRIPTION
8c	25059	Suction Valve Spring
8d	50303	Spring Retainer
8e	25255	Retaining Ring
9	51288	Manifold
10	25607	Manifold Bolt
11	51955	Lube Harness
11a	27101	Ball Valve
11b	25946	Nipple
11c	53242	Lube Manifold
11d	26802	Reducing Bushing
11e	27732	Hose Fitting
11f	27740	Hose (Order in feet)
11g	27475	Needle Valve
11h	26465	Nipple
12	51659	Trunnion
13	26468	Cotter Pin
14	50295	Trunnion Rod
15	50115	Adapter Plate Spacer
16	26494	Adapter Plate Bolt
17	51287	Adapter Plate
18	51556	Plunger Adapter
19	50889	Pump Wrench

UNx™ FLUID END UPGRADE – MODEL 4515B

BUTTERWORTH | GARDNER-DENVER
L-450, T-450, TF-450, L-200 PUMPS

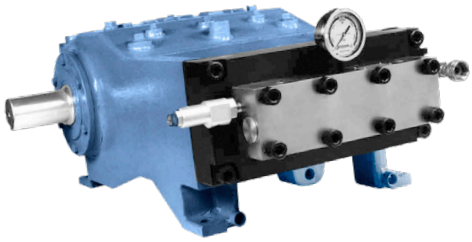

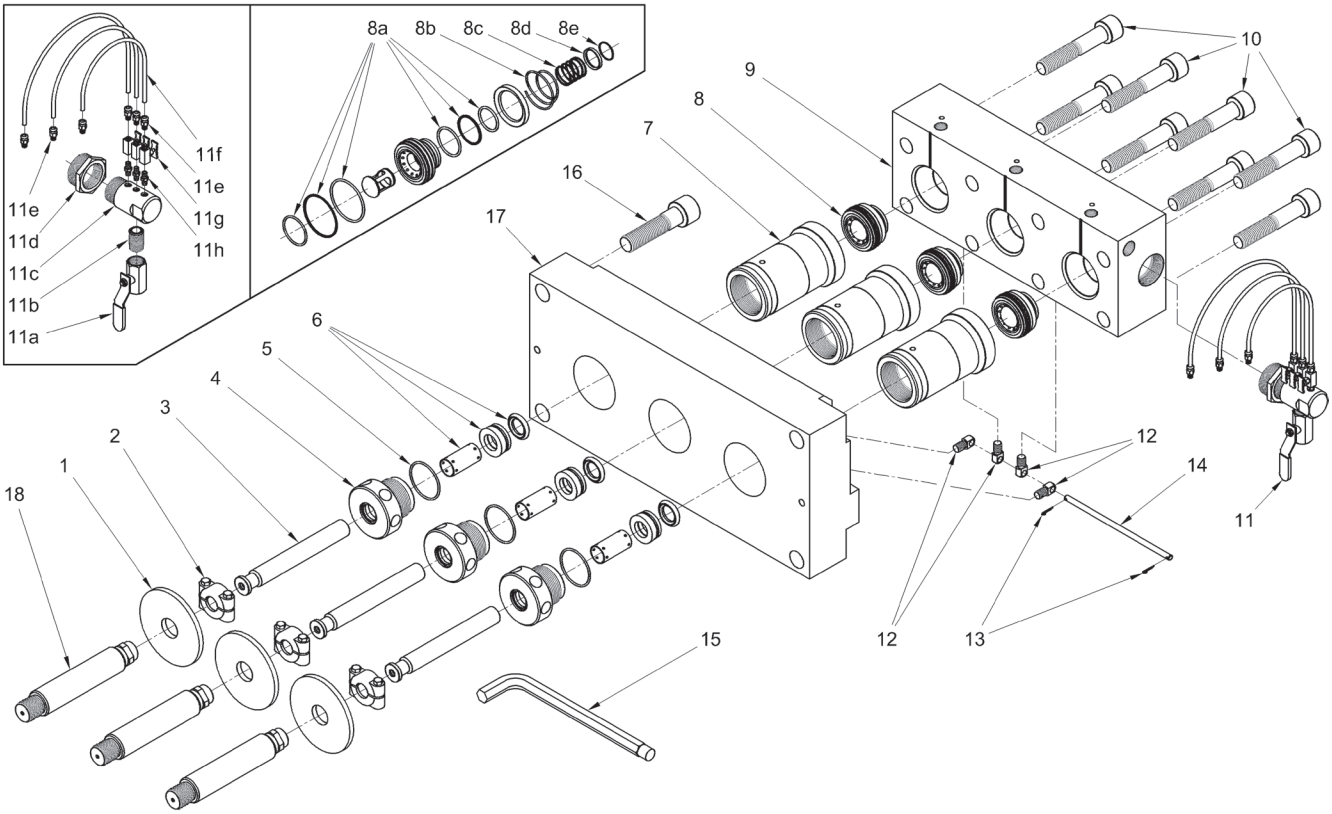

FLUID ENDS SPECS

PART NO.	PLUNGER SIZE			CONNECTION TYPES**											MAX. OPERATING PRESSURE	
	NO.	DIAMETER					200 RPM		300 RPM		400 RPM		500 RPM			
		in	mm	TOP PORTS	DISCHARGE PORTS	SUPPLY PORTS	gpm	lpm	gpm	lpm	gpm	lpm	gpm	lpm	psi	bar
51840	#10	.980	24.89	3/4" NPT Female	1/2" NPT Female	2" NPT Female	8.8	33	13.2	50	17.6	67	22.1	84	15,000	1034
51845	#11	1.10	27.94				11.1	42	16.7	63	22.2	84	27.8	105	15,000	1034
51850	#12	1.200	30.48				13.2	50	198.8	75	26.4	100	33.1	125	15,000	1034
51855	#13	1.335	33.91				16.4	62	24.6	93	32.7	124	40.9	155	12,000	827
51860	#15	1.500	38.10				20.7	78	31.0	117	41.3	156	51.7	196	10,000	689
J55775	#16	1.670	42.42				25.6	97	38.4	145	51.2	194	64.0	242	8,000	551

**Displacement (flow) values represented refer to "theoretical" flow, neglecting inefficiency resulting compressibility of water and expansion of pressure-bearing components. Performance data is based on power end specifications published by the original equipment manufacturer; however, some power ends may differ those used to determine the values above. Contact a Jetstream Solutions Provider for help with fluid end selection.

UNx™ FLUID END UPGRADE – MODEL 4515B
BUTTERWORTH | GARDNER-DENVER
L-450, T-450, TF-450, L-200 PUMPS

PART BREAKDOWN

ITEM	PART NO.	DESCRIPTION
1	26487	Deflector
2	51736	Plunger Coupling
3	51721	#10 Plunger
	51722	#11 Plunger
	51723	#12 Plunger
	51724	#13 Plunger
	51726	#15 Plunger
	53314	#16 Plunger
4	51647	#10 Gland Nut
	51651	#11 Gland Nut
	51707	#12 Gland Nut
	51744	#13 Gland Nut
	51746	#15 Gland Nut
	53316	#16 Gland Nut
5	26387	O-Ring (#9 to #15 Gland Nut)
	26930	O-Ring (#16 Gland Nut)
6	50658	#10 Packing Set
	50659	#11 Packing Set
	50660	#12 Packing Set
	50661	#13 Packing Set
	50662	#15 Packing Set
	53321	#16 Packing Set
7	52869	#10, #11 Stuffing Box
	52871	#12, #13, #15 Stuffing Box
	J55773	#16 Stuffing Box

ITEM	PART NO.	DESCRIPTION
8	52870	Uni-Valve
8a	52875	Uni-Valve Seal Kit
8b	27119	Discharge Valve Spring
8c	27118	Suction Valve Spring
8d	52879	Spring Retainer
8e	52878	Retaining Ring
9	52866	Manifold
10	25607	Manifold Bolt
11	51955	Lube Harness
11a	27101	Ball Valve
11b	25946	Nipple
11c	53242	Lube Manifold
11d	26802	Reducing Bushing
11e	26874	Hose Fitting
11f	26469	Hose (Order in feet)
11g	27475	Needle Valve
11h	26465	Nipple
12	51659	Trunnion
13	26468	Cotter Pin
14	50295	Trunnion Rod
15	50889	Pump Wrench
16	26212	Adapter Plate Bolt
17	51714	Adapter Plate
18	51719	Crosshead Stub

NOTE: Parts listed on this page are for current 4515B fluid end models. For first generation fluid end models, which utilize different stuffing boxes, valves, and manifold, see the following page. Models can be most easily distinguished by the part number stamped on the top face of the fluid end manifold. Current models use manifold part number 52866 while first generation fluid ends use manifold part number 51718.

UNx™ FLUID END UPGRADE – MODEL 4515B (GEN 1)

BUTTERWORTH | GARDNER-DENVER
L-450, T-450, TF-450, L-200 PUMPS

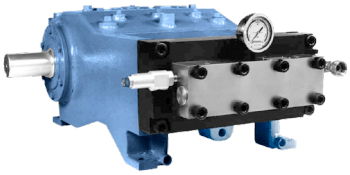

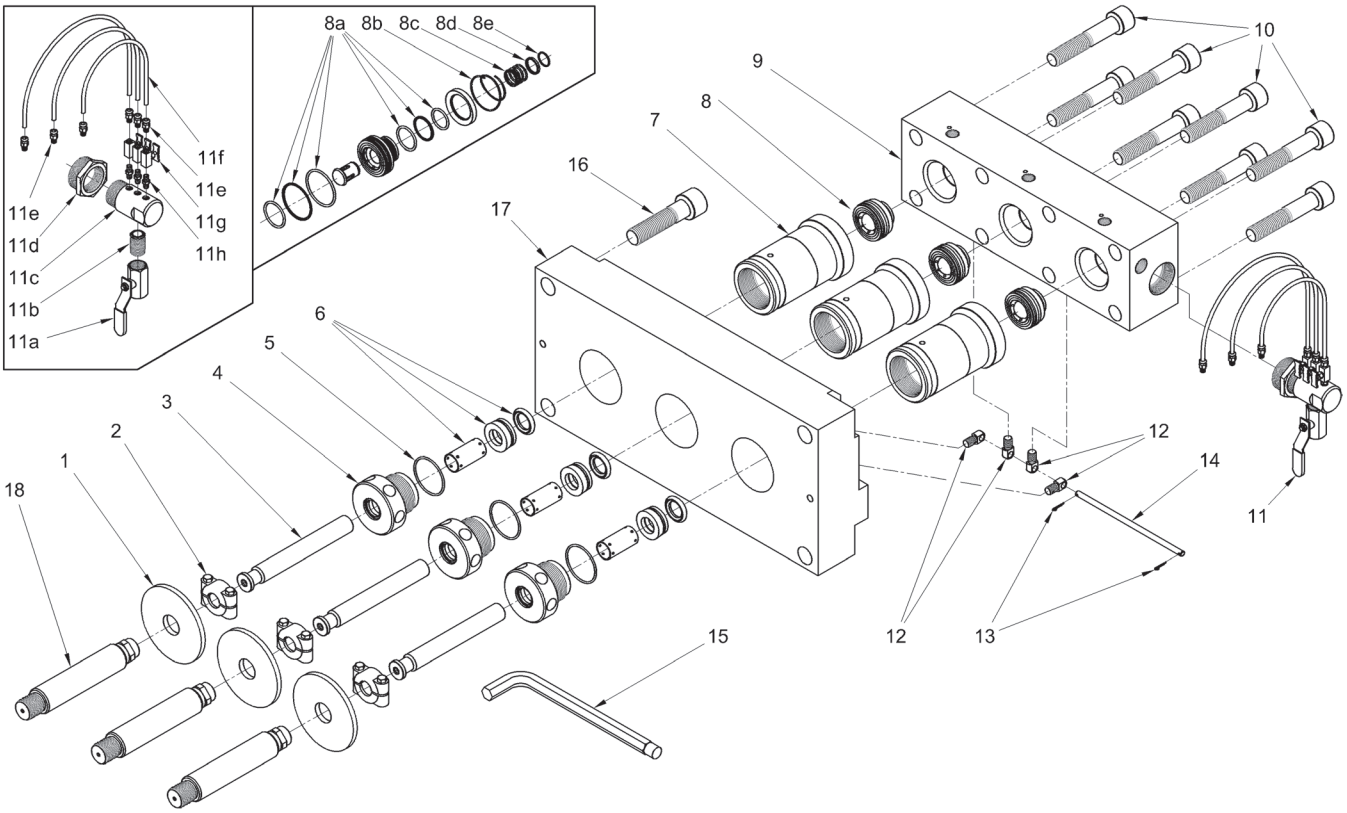

UNx™ FLUID END UPGRADE – MODEL 4515B (GEN 1)
BUTTERWORTH | GARDNER-DENVER
L-450, T-450, TF-450, L-200 PUMPS

PART BREAKDOWN

ITEM	PART NO.	DESCRIPTION
1	26487	Deflector
2	51736	Plunger Coupling
3	51721	#10 Plunger
	51722	#11 Plunger
	51723	#12 Plunger
	51724	#13 Plunger
	51726	#15 Plunger
4	51647	#10 Gland Nut
	51651	#11 Gland Nut
	51707	#12 Gland Nut
	51744	#13 Gland Nut
	51746	#15 Gland Nut
5	26387	O-Ring
6	50658	#10 Packing Set
	50659	#11 Packing Set
	50660	#12 Packing Set
	50661	#13 Packing Set
	50662	#15 Packing Set
7	51716	#10, #11 Stuffing Box
	51717	#12, #13, #15 Stuffing Box
8	50365	Uni-Valve
8a	50370	Uni-Valve Seal Kit

ITEM	PART NO.	DESCRIPTION
8b	25060	Discharge Valve Spring
8c	25059	Suction Valve Spring
8d	50303	Spring Retainer
8e	25255	Retaining Ring
9	51718	Manifold
10	25607	Manifold Bolt
11	51955	Lube Harness
11a	27101	Ball Valve
11b	25946	Nipple
11c	53242	Lube Manifold
11d	26802	Reducing Bushing
11e	26874	Hose Fitting
11f	26469	Hose (Order in feet)
11g	27475	Needle Valve
11h	26465	Nipple
12	51659	Trunnion
13	26468	Cotter Pin
14	50295	Trunnion Rod
15	50889	Pump Wrench
16	26212	Adapter Plate Bolt
17	51714	Adapter Plate
18	51719	Crosshead Stud

NOTE: Parts listed on this page are for first generation 4515B fluid end models no longer sold. These models utilize different stuffing boxes, valves, and manifold than the current design. Models can be most easily distinguished by the part number stamped on the top face of the fluid end manifold. Current models use manifold part number 52866 while first generation fluid ends featured on this page use manifold part number 51718.

UNx™ FLUID END UPGRADE – MODEL 5015G

GARDNER-DENVER
PE-5, P172 PUMPS

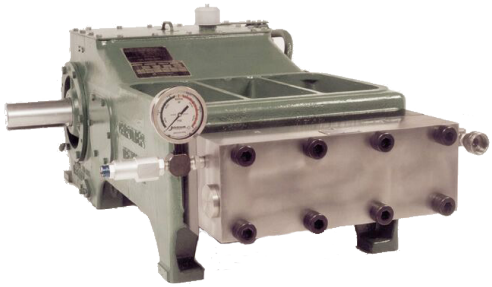

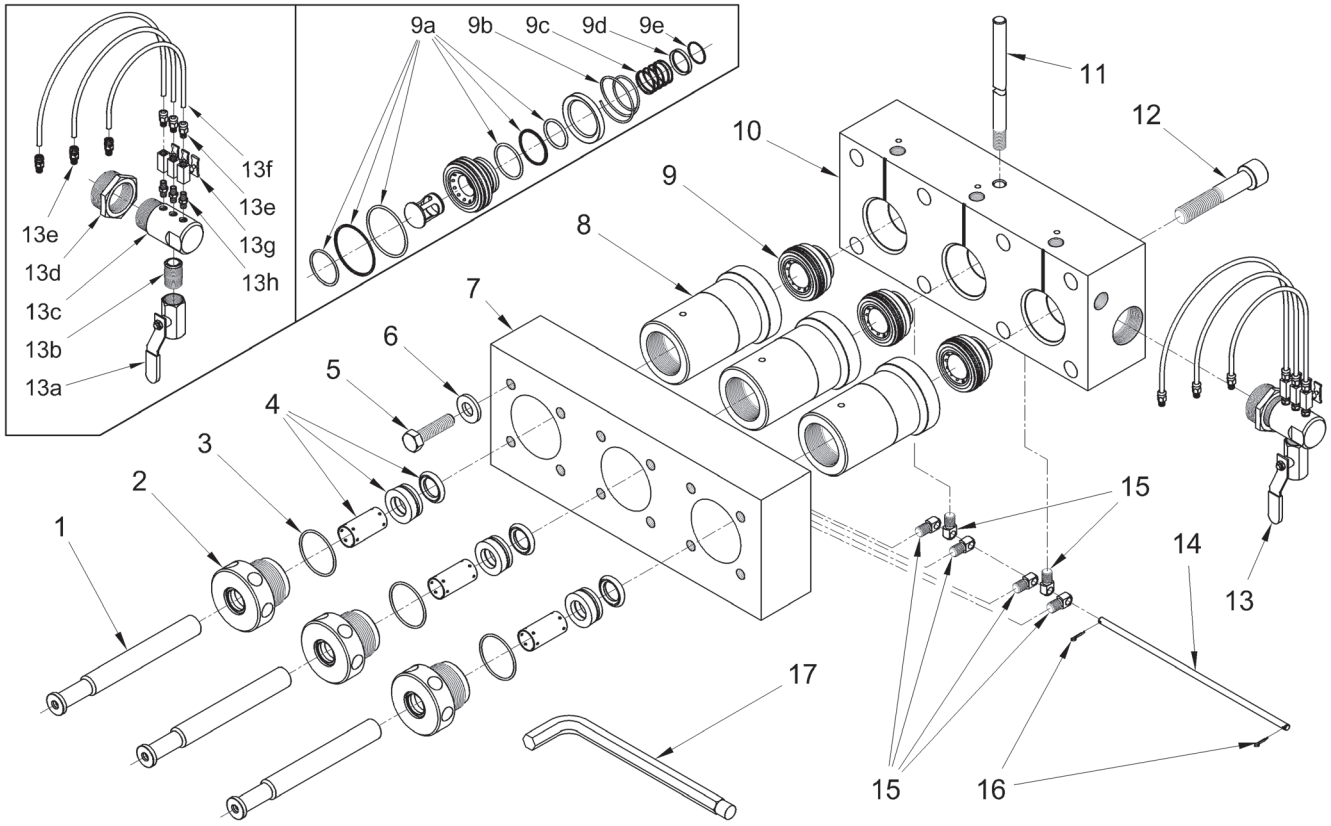

FLUID END SPECS

PART NO.	PLUNGER SIZE			CONNECTION TYPES**									MAX. OPERATING PRESSURE	
	NO.	DIAMETER					150 RPM		200 RPM		300 RPM			
		in	mm	TOP PORTS	DISCHARGE PORTS	SUPPLY PORTS	gpm	lpm	gpm	lpm	gpm	lpm	psi	bar
52170	#15	1.500	38.10	3/4" NPT Female	1/2" NPT Female	2 - 1/2"" NPT Female	17.2	65	23.0	87	23.0	87	15,000	1034

**Displacement (flow) values represented refer to “theoretical” flow, neglecting inefficiency resulting compressibility of water and expansion of pressure-bearing components. Performance data is based on power end specifications published by the original equipment manufacturer; however, some power ends may differ those used to determine the values above. Contact a Jetstream Solutions Provider for help with fluid end selection.

UNx™ FLUID END UPGRADE – MODEL 5015G
GARDNER-DENVER
PE-5, P172 PUMPS

PART BREAKDOWN

ITEM	PART NO.	DESCRIPTION
1	52092	#15 Plunger
	50378	#17 Plunger
2	52121	#15 Gland Nut
	52122	#17 Gland Nut
3	26734	O-Ring
4	52111	#15 Packing Set
	52112	#17 Packing Set
5	26836	Adapter Plate Bolt
6	52104	Washer
7	52098	Adapter Plate
8	52099	Stuffing Box
9	52180	Uni-Valve
9a	52118	Uni-Valve Seal Kit
9b	26737	Discharge Valve Spring
9c	26735	Suction Valve Spring
9d	52102	Spring Retainer
9e	26733	Retaining Ring

ITEM	PART NO.	DESCRIPTION
10	52097	Manifold
11	52114	Lifting Rod
12	26732	Manifold Bolt
13	54895	Lube Harness
13a	27101	Ball Valve
13b	25946	Nipple
13c	53242	Lube Manifold
13d	27729	Bushing
13e	26874	Hose Fitting
13f	26469	Hose (Order in feet)
13g	27475	Needle Valve
13h	26465	Nipple
14	52117	Trunnion Rod
15	51659	Trunnion
16	26468	Cotter Pin
17	50889	Pump Wrench

NLB UPGRADES

UNx™ FLUID END UPGRADE – MODEL 3015N

NLB 1012C, 1012D PUMPS

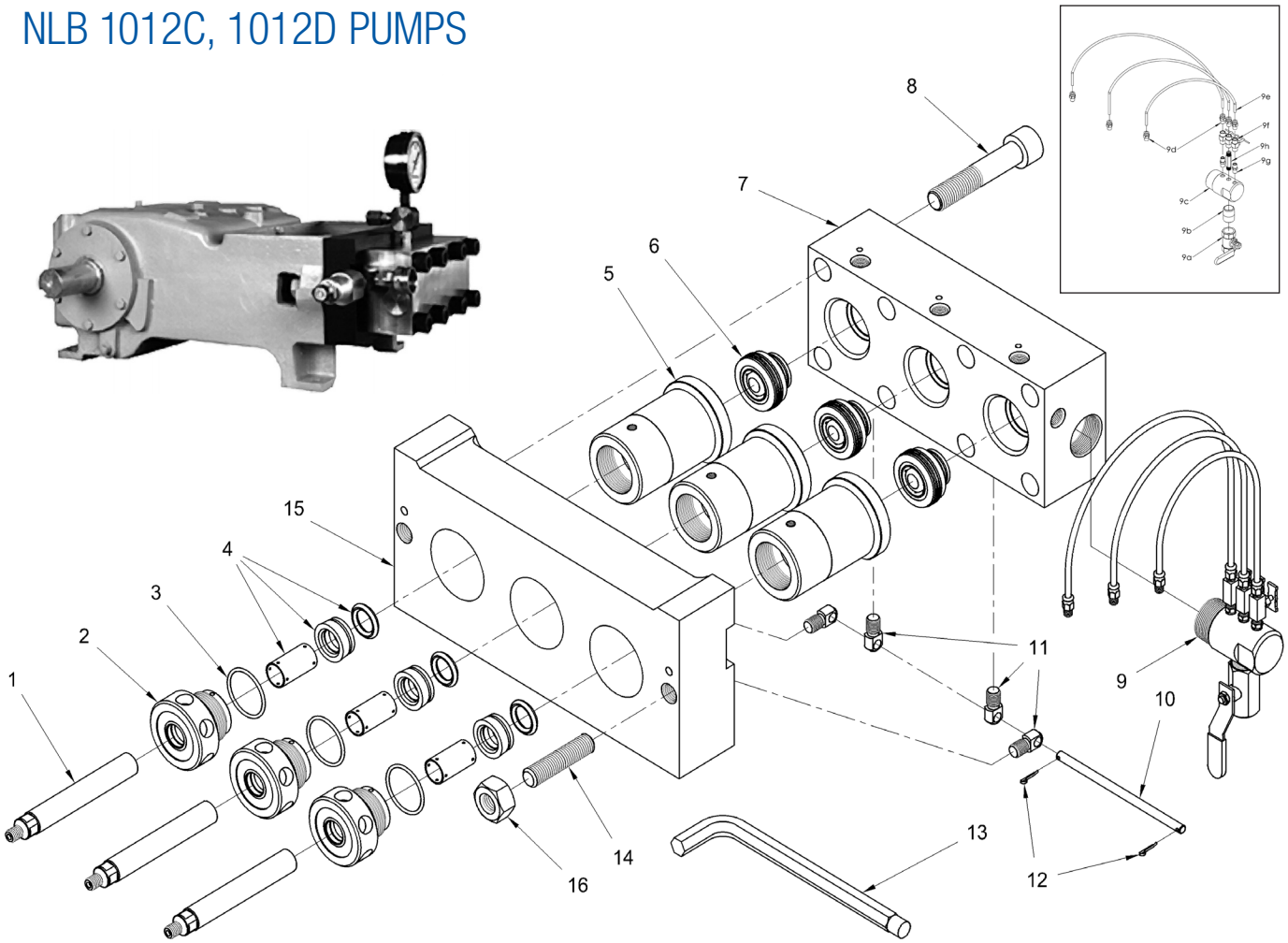

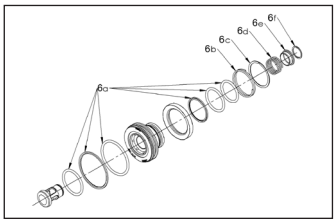

FLUID END SPECS

PART NO.	PLUNGER SIZE			CONNECTION TYPES**											MAX. OPERATING PRESSURE	
	NO.	DIAMETER					200 RPM		300 RPM		400 RPM		500 RPM			
		in	mm	TOP PORTS	DISCHARGE PORTS	SUPPLY PORTS	gpm	lpm	gpm	lpm	gpm	lpm	gpm	lpm	psi	bar
51720	#7	.735	18.67	1/2" NPT Female	1/2" NPT Female	1-1/2" NPT Female	3.3	13	5.0	19	6.6	25	8.3	31	15,000	1034
51725	#8	.800	20.32				3.9	15	5.9	22	7.8	30	9.8	37	15,000	1034
51730	#9	.900	22.86				5.0	19	7.4	28	9.9	38	12.4	47	12,000	827
51735	#10	1.000	25.40				6.1	23	9.2	35	12.2	46	15.3	58	10,000	689
52265	#11	1.125	28.5				7.7	29	11.6	74	15.5	59	19.4	73	8,000	551

**Displacement (flow) values represented refer to "theoretical" flow, neglecting inefficiency resulting compressibility of water and expansion of pressure-bearing components. Performance data is based on power end specifications published by the original equipment manufacturer; however, some power ends may differ those used to determine the values above. Contact a Jetstream Solutions Provider for help with fluid end selection.

UNx™ FLUID END UPGRADE – MODEL 3015N
NLB 1012C, 1012D PUMPS

PART BREAKDOWN

ITEM	PART NO.	DESCRIPTION
1	51690	#7 Plunger
	51696	#8 Plunger
	51667	#9 Plunger
	51694	#10 Plunger
	52983	#11 Plunger
2	51617	#7 Gland Nut
	51619	#8 Gland Nut
	51621	#9 Gland Nut
	51623	#10 Gland Nut
	52231	#11 Gland Nut
3	26416	O-Ring
4	51689	#7 Packing Set
	51691	#8 Packing Set
	51674	#9 Packing Set
	51697	#10 Packing Set
	52233	#11 Packing Set
5	51611	#7, #8 Stuffing Box
	51671	#9, 10 Stuffing Box
	52232	#11 Stuffing Box
6	51675	Uni-Valve
6a	50034	Uni-Valve Seal Kit
6b	26476	Discharge Valve Spring

*Not Shown

ITEM	PART NO.	DESCRIPTION
6c	26470	Retaining Ring
6d	26472	Suction Valve Spring
6e	51664	Spring Retainer
7	51672	Manifold
8	26462	Manifold Bolt
9	51695	Lube Harness
9a	27101	Ball Valve
9b	25946	Nipple
9c	53242	Lube Manifold
9d	27732	Hose Fitting
9e	27740	Hose (Order in feet)
9f	27475	Needle Valve
9g	26465	Nipple
9h	60815	Nipple
10	51666	Trunnion Rod
11	51659	Trunnion
12	26468	Cotter Pin
13	50064	Pump Wrench
14	28779	Adapter Plate Stud
15	51692	Adapter Plate
16	25864	Adapter Plate Nut
17*	62171-GRN	Manifold Decal

UNx™ FLUID END UPGRADE – MODEL 4215N

NLB
10150, 10200, 10225, 10203, 20153, 20156, 20203, 20225, 24155, 24205, 24225, 40201, TD-120 PUMPS

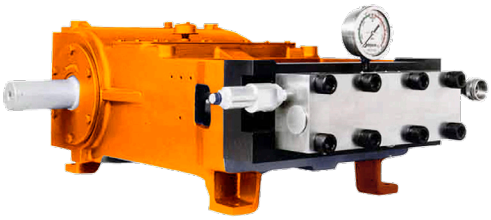

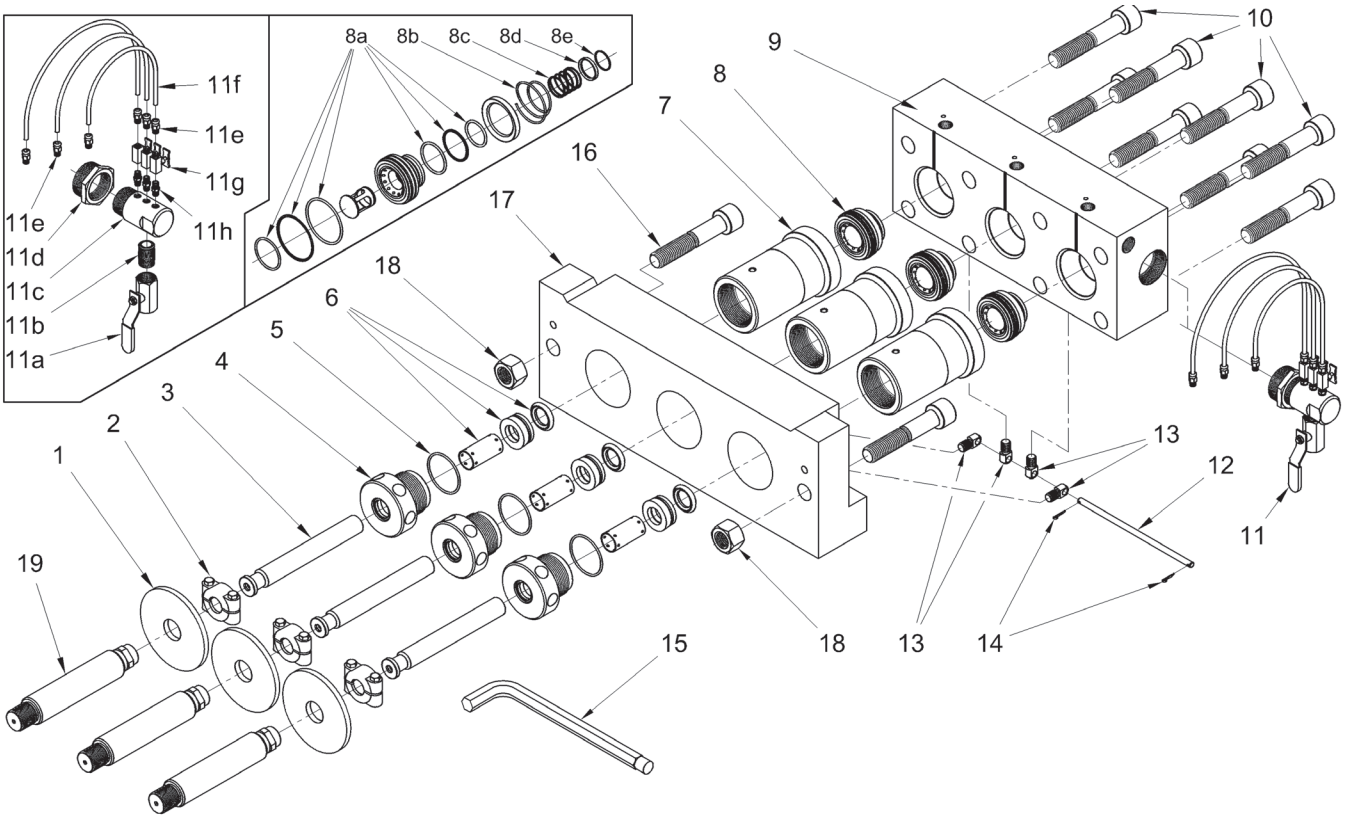

FLUID ENDS SPECS

PART NO.	PLUNGER SIZE			CONNECTION TYPES**			200 RPM		300 RPM		400 RPM		500 RPM		MAX. OPERATING PRESSURE	
	NO.	DIAMETER														
		in	mm	TOP PORTS	DISCHARGE PORTS	SUPPLY PORTS	gpm	lpm	gpm	lpm	gpm	lpm	gpm	lpm	psi	bar
51800	#10	.980	24.89	3/4" NPT Female	1/2" NPT Female	2" NPT Female	8.3	32	12.5	47	7.8	63	20.8	79	15,000	1034
51805	#11	1.100	27.94				10.5	40	15.7	60	9.9	79	26.2	99	15,000	1034
51285	#12	1.200	30.48				12.5	47	18.7	71	12.2	95	31.2	118	12,000	827
51810	#13	1.335	33.91				15.5	59	23.2	88	15.5	117	38.6	146	10,000	689
51815	#15	1.500	38.10				19.5	74	29.3	111	15.5	117	48.8	185	8,000	551

**Displacement (flow) values represented refer to "theoretical" flow, neglecting inefficiency resulting compressibility of water and expansion of pressure-bearing components. Performance data is based on power end specifications published by the original equipment manufacturer; however, some power ends may differ those used to determine the values above. Contact a Jetstream Solutions Provider for help with fluid end selection.

UNx™ FLUID END UPGRADE – MODEL 4215N
NLB
10150, 10200, 10225, 10203, 20153, 20156, 20203, 20225, 24155, 24205, 24225, 40201, TD-120 PUMPS

PART BREAKDOWN

ITEM	PART NO.	DESCRIPTION
1	26487	Deflector
2	51736	Plunger Coupling
3	51721	#10 Plunger
	51722	#11 Plunger
	51723	#12 Plunger
	51724	#13 Plunger
	51726	#15 Plunger
	53314	#16 Plunger
4	51647	#10 Gland Nut
	51651	#11 Gland Nut
	51707	#12 Gland Nut
	51744	#13 Gland Nut
	51746	#15 Gland Nut
	53316	#16 Gland Nut
5	26387	O-Ring (#9 to #15 Gland Nut)
	26930	O-Ring (#16 Gland Nut)
6	50658	#10 Packing Set
	50659	#11 Packing Set
	50660	#12 Packing Set
	50661	#13 Packing Set
	50662	#15 Packing Set
	53321	#16 Packing Set
7	52872	#10, #11 Stuffing Box
	52873	#12, #13, #15 Stuffing Box
	53313	#16 Stuffing Box
8	52870	Uni-Valve

ITEM	PART NO.	DESCRIPTION
8a	52875	Uni-Valve Seal Kit
8b	27119	Discharge Valve Spring
8c	27118	Suction Valve Spring
8d	52879	Spring Retainer
8e	52878	Retaining Ring
9	52864	Manifold
10	25607	Manifold Bolt
11	51955	Lube Harness
11a	27101	Ball Valve
11b	25946	Nipple
11c	53242	Lube Manifold
11d	26802	Reducing Bushing
11e	27732	Hose Fitting
11f	27740	Hose (Order in feet)
11g	27475	Needle Valve
11h	26465	Nipple
12	50295	Trunnion Rod
13	51659	Trunnion
14	26468	Cotter Pin
15	50889	Pump Wrench
16	26500	Adapter Plate Bolt
17	50293	Adapter Bolt
18	26669	Adapter Plate Nut
19	51766	Crosshead Stud
20*	62171-GRN	Manifold Decal

*Not Shown

NOTE: Parts listed on this page are for current 4215N fluid end models. For first generation fluid end models, which utilize different stuffing boxes, valves, and manifold, see the following page. Models can be most easily distinguished by the part number stamped on the top face of the fluid end manifold. Current models use manifold part number 52864 while first generation fluid ends use manifold part number 50896.

UNx™ FLUID END UPGRADE – MODEL 4215N (GEN 1)

NLB
10150, 10200, 10225, 10203, 20153, 20156,20203, 20225, 24155, 24205, 24225, 40201,TD-120 PUMPS

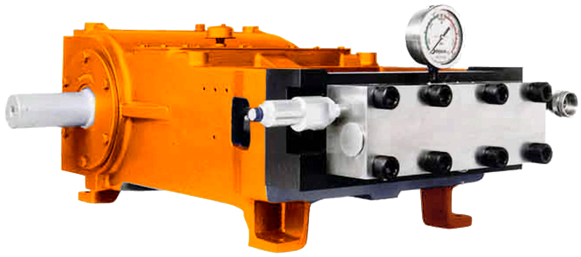

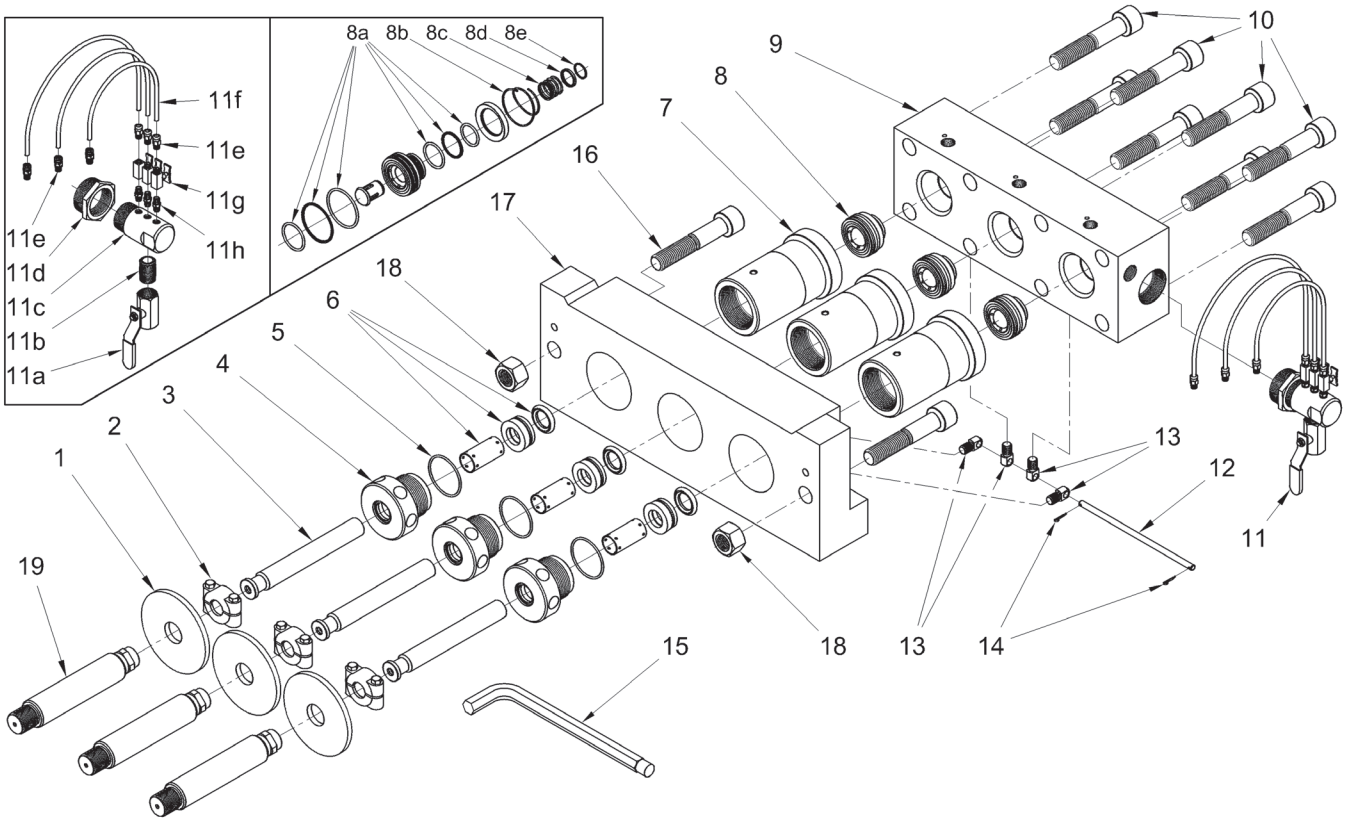

UNx™ FLUID END UPGRADE – MODEL 4215N (GEN 1)
NLB
10150, 10200, 10225, 10203, 20153, 20156, 20203, 20225, 24155, 24205, 24225, 40201, TD-120 PUMPS

PART BREAKDOWN

ITEM	PART NO.	DESCRIPTION
1	26487	Deflector
2	51736	Plunger Coupling
3	51721	#10 Plunger
	51722	#11 Plunger
	51723	#12 Plunger
	51724	#13 Plunger
	51726	#15 Plunger
4	51647	#10 Gland Nut
	51651	#11 Gland Nut
	51707	#12 Gland Nut
	51744	#13 Gland Nut
	51746	#15 Gland Nut
5	26387	O-Ring
6	50658	#10 Packing Set
	50659	#11 Packing Set
	50660	#12 Packing Set
	50661	#13 Packing Set
	50662	#15 Packing Set
7	50297	#10, #11 Stuffing Box
	50299	#12, #13, #15 Stuffing Box
8	52870	Uni-Valve
8a	52875	Uni-Valve Seal Kit
8b	27119	Discharge Valve Spring

ITEM	PART NO.	DESCRIPTION
8c	27118	Suction Valve Spring
8d	50303	Spring Retainer
8e	25255	Retaining Ring
9	50896	Manifold
10	25607	Manifold Bolt
11	51955	Lube Harness
11a	27101	Ball Valve
11b	25946	Nipple
11c	53242	Lube Manifold
11d	26802	Reducing Bushing
11e	27732	Hose Fitting
11f	27740	Hose (Order in feet)
11g	27475	Needle Valve
11h	26465	Nipple
12	50295	Trunnion Rod
13	51659	Trunnion
14	26468	Cotter Pin
15	50889	Pump Wrench
16	26500	Adapter Plate Bolt
17	50293	Adapter Bolt
18	26669	Adapter Plate Nut
19	51766	Crosshead Stud

NOTE: Parts listed on this page are for first generation 4215N fluid end models no longer sold. These models utilize different stuffing boxes, valves, and manifold than the current design. Models can be most easily distinguished by the part number stamped on the top face of the fluid end manifold. Current models use manifold part number 52864 while first generation fluid ends featured on this page use manifold part number 50896.

UNx™ FLUID END UPGRADE – MODEL 4215QN

NLB
10250, 20253, 36250, QD-200 (POWER END) PUMPS

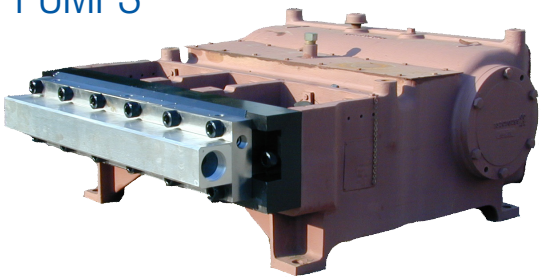

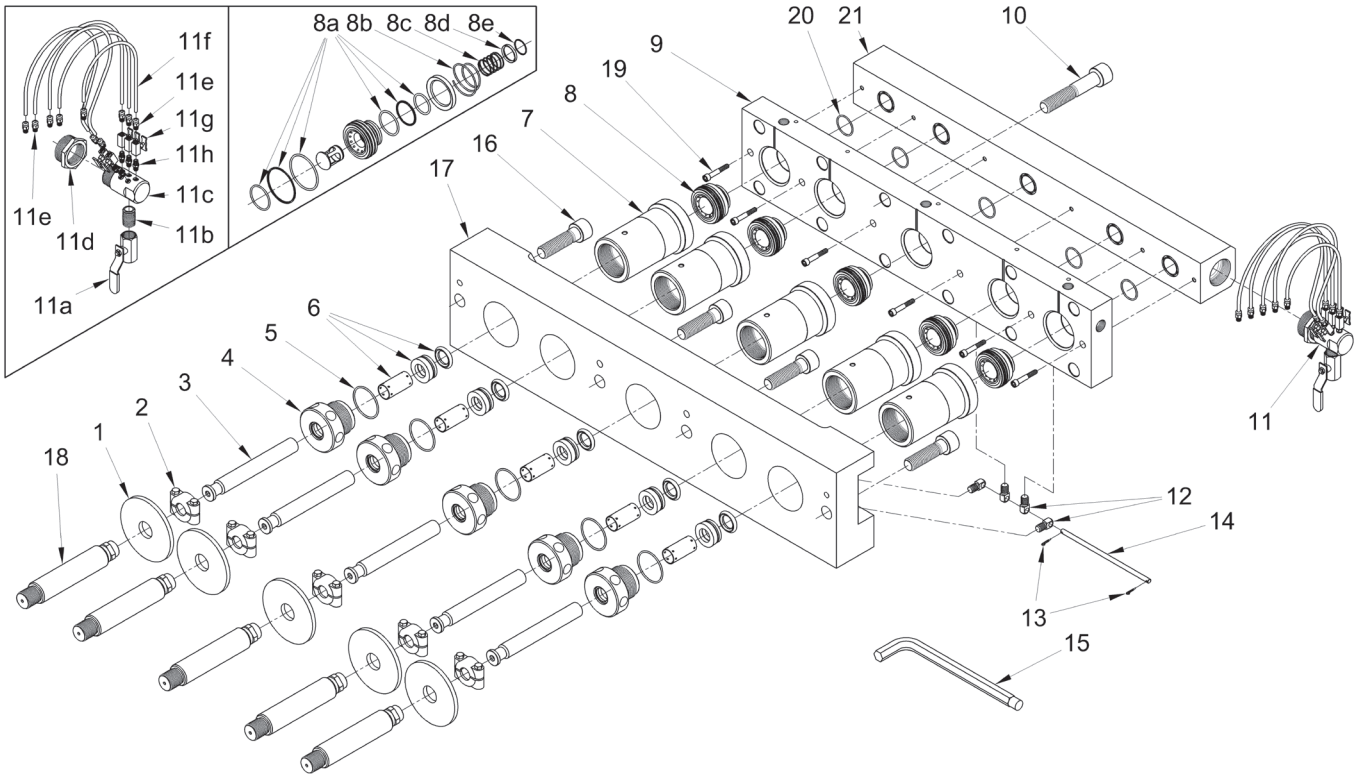

FLUID END SPECS

PART NO.	PLUNGER SIZE			CONNECTION TYPES**											MAX. OPERATING PRESSURE	
	NO.	DIAMETER					150 RPM		200 RPM		300 RPM		400 RPM			
		in	mm	TOP PORTS	DISCHARGE PORTS	SUPPLY PORTS	gpm	lpm	gpm	lpm	gpm	lpm	gpm	lpm	psi	bar
53555	#10	.980	24.89	3/4" NPT Female	1/2" NPT Female	2" NPT Female	6.9	26	13.9	53	20.8	79	27.8	105	15,000	1034
53560	#11	1.100	27.94				8.7	33	17.5	66	26.2	99	35.0	132	12,000	827
53565	#12	1.200	30.48				10.4	39	20.8	79	31.2	118	41.6	157	10,000	689
53585	#13	1.335	33.91				12.9	49	25.8	98	38.6	146	51.5	195	8,000	551
53575	#15	1.500	38.10				16.3	62	32.5	123	48.8	185	65.1	246	6,500	448

**Displacement (flow) values represented refer to "theoretical" flow, neglecting inefficiency resulting compressibility of water and expansion of pressure-bearing components. Performance data is based on power end specifications published by the original equipment manufacturer; however, some power ends may differ those used to determine the values above. Contact a Jetstream Solutions Provider for help with fluid end selection.

UNx™ FLUID END UPGRADE – MODEL 4215QN NLB
10250, 20253, 36250, QD-200 (POWER END) PUMPS

PART BREAKDOWN

ITEM	PART NO.	DESCRIPTION
1	26487	Deflector
2	51736	Plunger Coupling
3	51721	#10 Plunger
	51722	#11 Plunger
	51723	#12 Plunger
	51724	#13 Plunger
	51726	#15 Plunger
4	51647	#10 Gland Nut
	51651	#11 Gland Nut
	51707	#12 Gland Nut
	51744	#13 Gland Nut
	51746	#15 Gland Nut
5	26387	O-Ring
6	50658	#10 Packing Set
	50659	#11 Packing Set
	50660	#12 Packing Set
	50661	#13 Packing Set
	50662	#15 Packing Set
7	52872	#10, #11 Stuffing Box
	52873	#12, #13, #15 Stuffing Box
8	52870	Uni-Valve
8a	52875	Uni-Valve Seal Kit
8b	27119	Discharge Valve Spring
8c	27118	Suction Valve Spring

ITEM	PART NO.	DESCRIPTION
8d	52879	Spring Retainer
8e	52878	Retaining Ring
9	53598	Manifold
10	27550	Manifold Bolt
11	53590	Lube Harness
11a	27101	Ball Valve
11b	25946	Nipple
11c	53793	Lube Manifold
11d	27729	Reducing Bushing
11e	26874	Hose Fitting
11f	26469	Hose (Order in feet)
11g	27475	Needle Valve
11h	26465	Nipple
12	51659	Trunnion
13	26468	Cotter Pin
14	50295	Trunnion Rod
15	50889	Pump Wrench
16	27550	Adapter Plate Bolt
17	53602	Adapter Plate
18	51766	Crosshead Stud
19	27551	Suction Manifold Bolt
20	25566	O-Ring
21	53601	Suction Manifold

TRITAN/ WHEATLEY UPGRADES

UNx™ FLUID END UPGRADE – MODEL 3115T

TRITAN
3310SS, 3310WSS, P-313, P-323, P-330A PUMPS

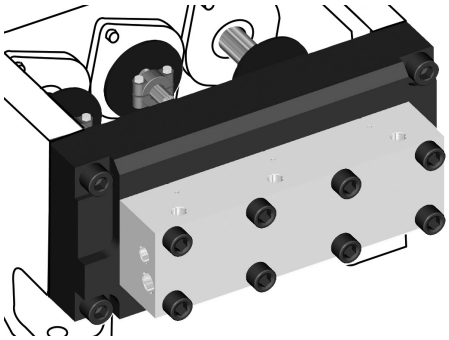

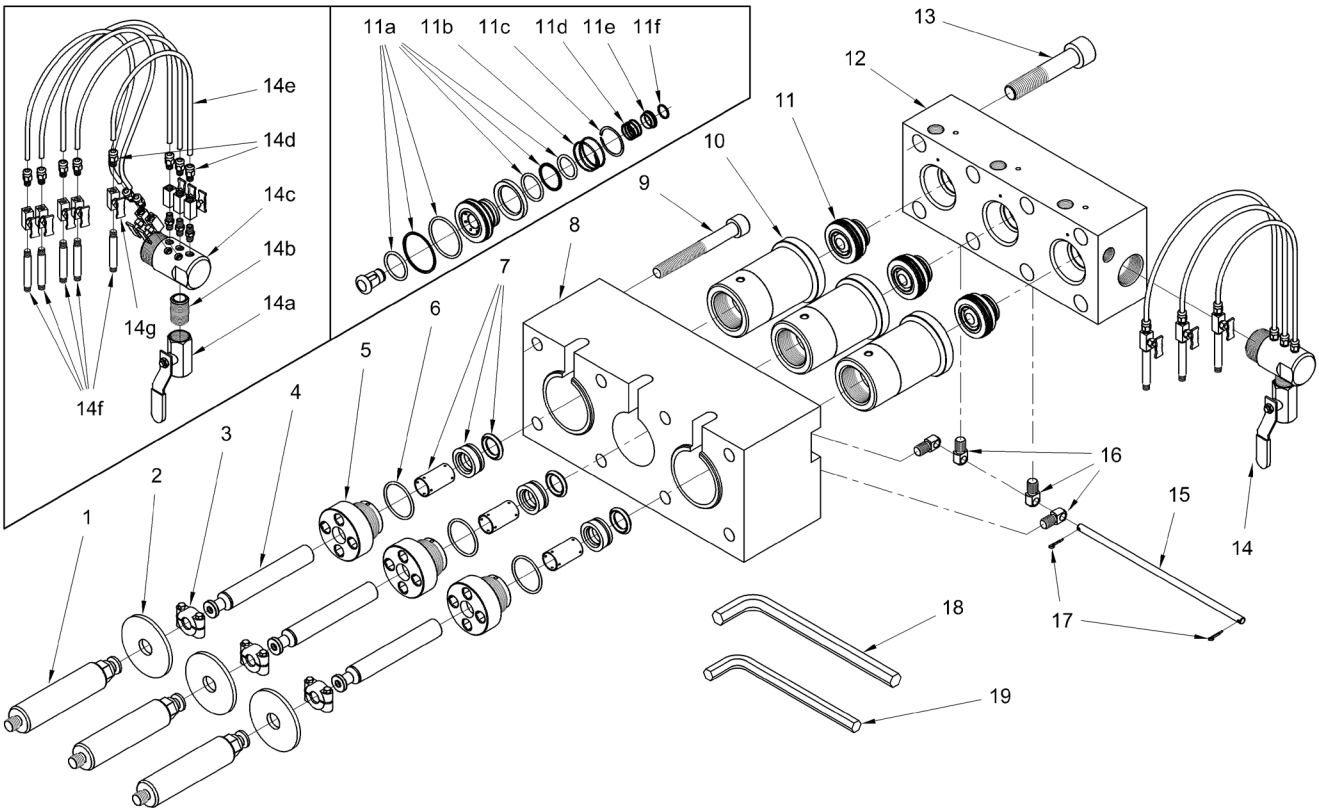

FLUID END SPECS

PART NO.	PLUNGER SIZE			CONNECTION TYPES**											MAX. OPERATING PRESSURE	
	NO.	DIAMETER					200 RPM		300 RPM		400 RPM		500 RPM			
		in	mm	TOP PORTS	DISCHARGE PORTS	SUPPLY PORTS	gpm	lpm	gpm	lpm	gpm	lpm	gpm	lpm	psi	bar
52755	#7	.735	18.67	1/2" NPT Female	1/2" NPT Female	1-1/2" NPT Female	3.4	13	5.2	20	6.9	26	8.6	33	15,000	1034
52760	#8	.800	20.32				4.1	15	6.1	23	8.2	31	10.2	39	12,500	861
52765	#9	.900	22.86				5.2	20	7.7	29	10.3	39	12.9	49	10,000	689
52770	#10	1.000	25.40				6.4	24	9.6	36	12.7	48	15.9	60	8,000	551

**Displacement (flow) values represented refer to "theoretical" flow, neglecting inefficiency resulting compressibility of water and expansion of pressure-bearing components. Performance data is based on power end specifications published by the original equipment manufacturer; however, some power ends may differ those used to determine the values above. Contact a Jetstream Solutions Provider for help with fluid end selection.

UNx™ FLUID END UPGRADE – MODEL 3115T TRITAN
3310SS, 3310WSS, P-313, P-323, P-330A PUMPS

PART BREAKDOWN

ITEM	PART NO.	DESCRIPTION
1	51791	Pony Rod
2	26623	Deflector
3	51737	Plunger Clamp
4	51831	#7 Plunger
	51741	#8 Plunger
	51742	#9 Plunger
	51743	#10 Plunger
5	51796	#7 Gland Nut
	51797	#8 Gland Nut
	51798	#9 Gland Nut
	51799	#10 Gland Nut
6	26416	O-Ring
7	51689	#7 Packing Set
	51691	#8 Packing Set
	51674	#9 Packing Set
	51697	#10 Packing Set
8	52701	Adapter Plate
9	25220	Adapter Plate Bolt
10	51788	#7, #8 Stuffing Box
	51789	#9, #10 Stuffing Box
11	51675	Uni-Valve

ITEM	PART NO.	DESCRIPTION
11a	50034	Uni-Valve Seal Kit
11b	26476	Discharge Valve Spring
11c	26470	Retaining Ring
11d	26472	Suction Valve Spring
11e	51664	Spring Retainer
11f	26474	Retaining Ring
12	52702	Manifold
13	26462	Manifold Bolt
14	52785	Lube Harness
14a	27101	Ball Valve
14b	25946	Nipple
14c	53242	Lube Manifold
14d	27732	Hose Fitting
14e	27740	Hose (Order in feet)
14f	26543	Nipple
14g	27475	Needle Valve
15	51666	Trunnion Rod
16	51659	Trunnion
17	26468	Cotter Pin
18	50064	3/4" Pump Wrench
19	26544	5/8" Pump Wrench

UNx™ FLUID END UPGRADE – MODEL 3515Q

TRITAN | WHEATLEY 5127SS PUMP

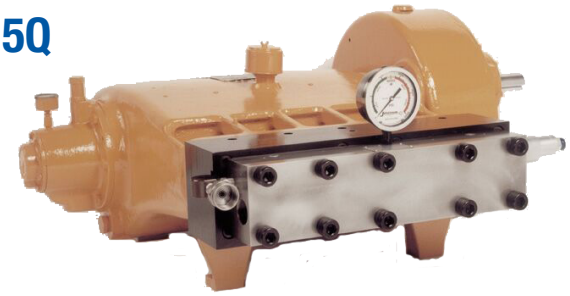

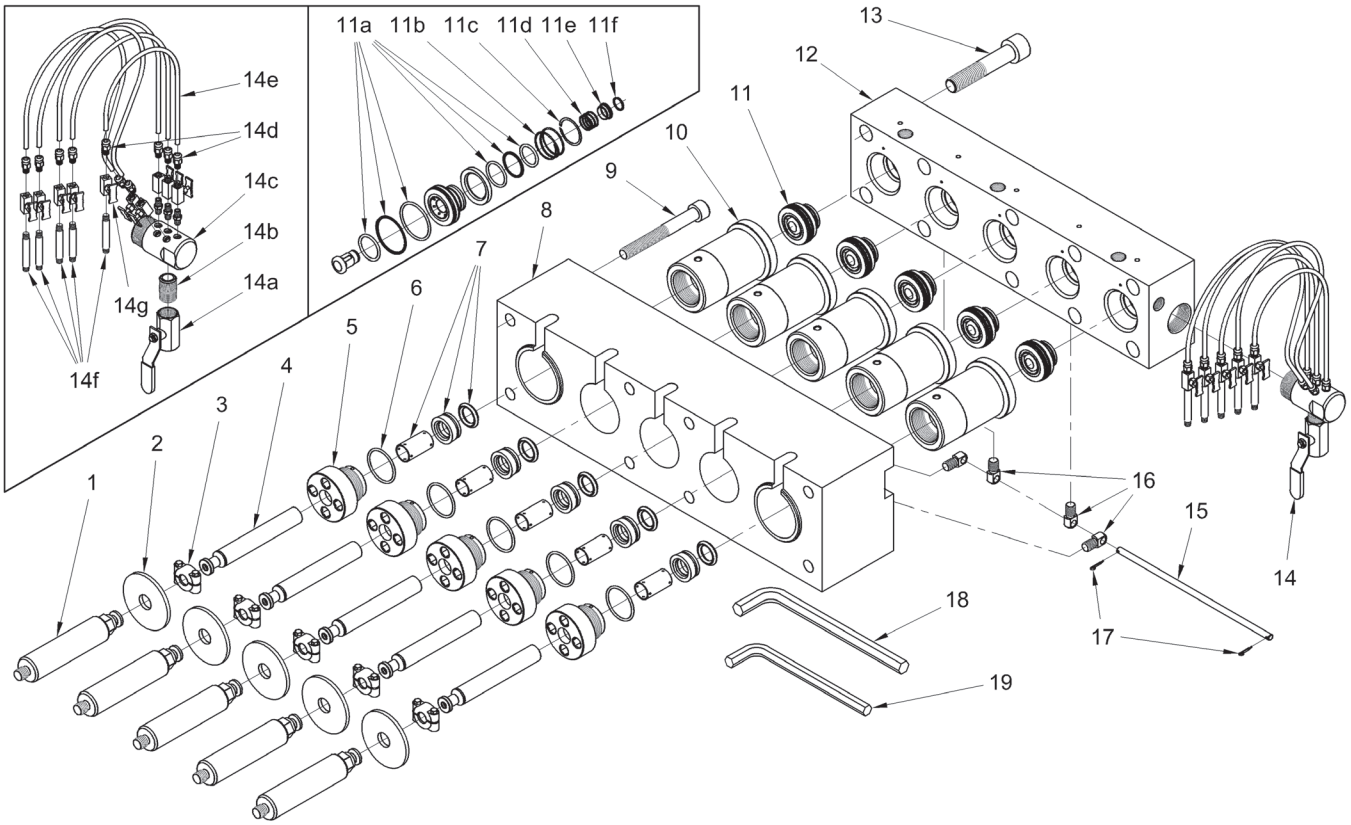

FLUID END SPECS

PART NO.	PLUNGER SIZE			CONNECTION TYPES**			200 RPM		300 RPM		400 RPM		500 RPM		MAX. OPERATING PRESSURE	
	NO.	DIAMETER														
		in	mm	TOP PORTS	DISCHARGE PORTS	SUPPLY PORTS	gpm	lpm	gpm	lpm	gpm	lpm	gpm	lpm	psi	bar
51915	#7	.735	18.67	1/2" NPT Female	1/2" NPT Female	1-1/2" NPT Female	6.4	24	9.6	37	12.9	49	16.1	61	15,000	1034
51920	#8	.800	20.32				7.6	29	11.4	43	15.2	58	19.0	72	12,500	861
51925	#9	.900	22.86				9.6	36	14.5	55	19.3	73	24.1	91	10,000	689
51930	#10	1.000	25.40				11.9	45	17.9	68	90	29.8	113	60	8,000	551

**Displacement (flow) values represented refer to "theoretical" flow, neglecting inefficiency resulting compressibility of water and expansion of pressure-bearing components. Performance data is based on power end specifications published by the original equipment manufacturer; however, some power ends may differ those used to determine the values above. Contact a Jetstream Solutions Provider for help with fluid end selection.

UNx™ FLUID END UPGRADE – MODEL 3515Q
TRITAN | WHEATLEY
5127SS PUMP

PART BREAKDOWN

ITEM	PART NO.	DESCRIPTION
1	51791	Pony Rod
2	26623	Deflector
3	51737	Plunger Clamp
4	51831	#7 Plunger
	51741	#8 Plunger
	51742	#9 Plunger
	51743	#10 Plunger
5	51796	#7 Gland Nut
	51797	#8 Gland Nut
	51798	#9 Gland Nut
	51799	#10 Gland Nut
6	26416	O-Ring
7	51689	#7 Packing Set
	51691	#8 Packing Set
	51674	#9 Packing Set
	51697	#10 Packing Set
8	51792	Adapter Plate
9	25220	Adapter Plate Bolt
10	51788	#7, #8 Stuffing Box
	51789	#9, #10 Stuffing Box
11	51675	Uni-Valve

ITEM	PART NO.	DESCRIPTION
11a	50034	Uni-Valve Seal Kit
11b	26476	Discharge Valve Spring
11c	26470	Retaining Ring
11d	26472	Suction Valve Spring
11e	51664	Spring Retainer
11f	26474	Retaining Ring
12	51793	Manifold
13	26462	Manifold Bolt
14	51795	Lube Harness
14a	27101	Ball Valve
14b	25946	Nipple
14c	53793	Lube Manifold
14d	26874	Hose Fitting
14e	26469	Hose (Order in feet)
14f	26543	Nipple
14g	27475	Needle Valve
15	51016	Trunnion Rod
16	51659	Trunnion
17	26468	Cotter Pin
18	50064	3/4" Pump Wrench
19	26544	5/8" Pump Wrench

WEATHERFORD UPGRADE

UNx™ FLUID END UPGRADE – MODEL 3015W

WEATHERFORD FE85 PUMP

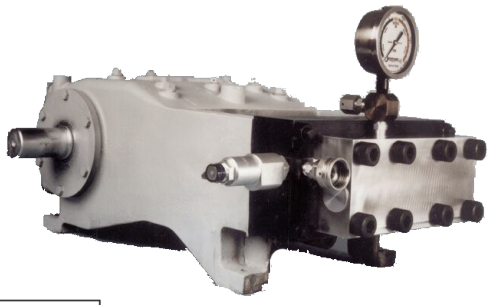

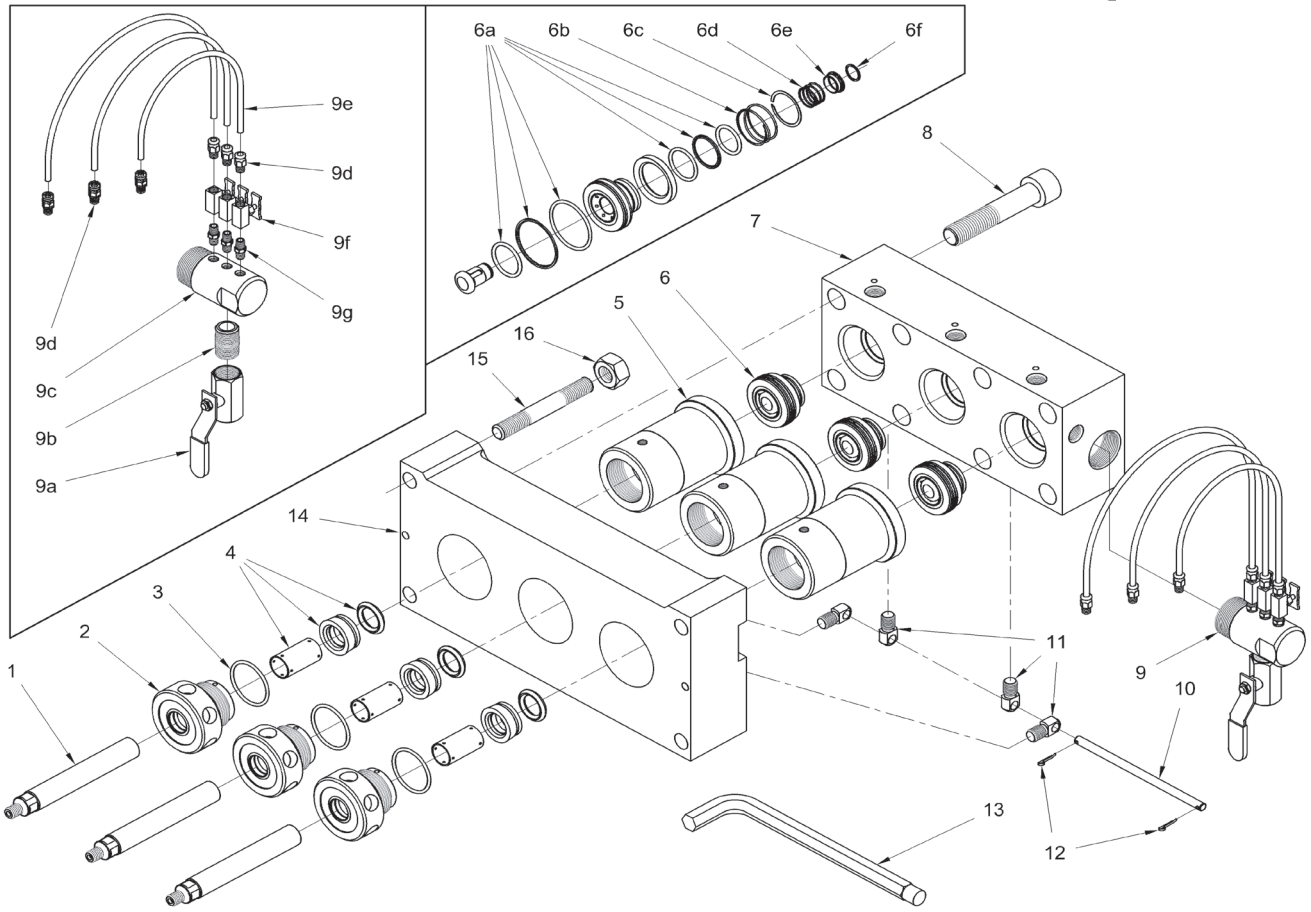

FLUID END SPECS

PART NO.	PLUNGER SIZE			CONNECTION TYPES**			200 RPM		300 RPM		400 RPM		500 RPM		MAX. OPERATING PRESSURE	
	NO.	DIAMETER														
		in	mm	TOP PORTS	DISCHARGE PORTS	SUPPLY PORTS	gpm	lpm	gpm	lpm	gpm	lpm	gpm	lpm	psi	bar
51740	#7	.735	18.67	1/2" NPT Female	1/2" NPT Female	1-1/2" NPT Female	5.0	19	6.6	25	8.3	31	9.1	34	15,000	1034
51745	#8	.800	20.32				5.9	22	7.8	30	9.8	37	10.8	41	12,500	861
51750	#9	.900	22.86				7.4	28	9.9	38	12.4	47	13.6	51	10,000	689
51755	#10	1.000	25.40				9.2	35	12.2	46	15.3	58	16.8	64	8,000	551
52280	#11	1.125	28.58				11.6	44	15.5	59	19.4	73	21.3	81	6,000	413

**Displacement (flow) values represented refer to "theoretical" flow, neglecting inefficiency resulting compressibility of water and expansion of pressure-bearing components. Performance data is based on power end specifications published by the original equipment manufacturer; however, some power ends may differ those used to determine the values above. Contact a Jetstream Solutions Provider for help with fluid end selection.

UNx™ FLUID END UPGRADE – MODEL 3015W WEATHERFORD FE85 PUMP

PART BREAKDOWN

ITEM	PART NO.	DESCRIPTION
1	51690	#7 Plunger
	51696	#8 Plunger
	51667	#9 Plunger
	51694	#10 Plunger
	52983	#11 Plunger
2	51617	#7 Gland Nut
	51619	#8 Gland Nut
	51621	#9 Gland Nut
	51623	#10 Gland Nut
	52231	#11 Gland Nut
3	26416	O-Ring
4	51689	#7 Packing Set
	51691	#8 Packing Set
	51674	#9 Packing Set
	51697	#10 Packing Set
	52233	#11 Packing Set
5	51611	#7, #8 Stuffing Box
	51671	#9, 10 Stuffing Box
	52232	#11 Stuffing Box
6	51675	Uni-Valve
6a	50034	Uni-Valve Seal Kit
6b	26476	Discharge Valve Spring

ITEM	PART NO.	DESCRIPTION
6c	26470	Retaining Ring
6d	26472	Suction Valve Spring
6e	51664	Spring Retainer
6f	26474	Retaining Ring
7	51672	Manifold
8	26462	Manifold Bolt
9	51695	Lube Harness
9a	27101	Ball Valve
9b	25946	Nipple
9c	53242	Lube Manifold
9d	27732	Hose Fitting
9e	27740	Hose (Order in feet)
9f	27475	Needle Valve
9g	26465	Nipple
10	51666	Trunnion Rod
11	51659	Trunnion
12	26468	Cotter Pin
13	50064	Pump Wrench
14	51656	Adapter Plate
15	26473	Adapter Plate Stud
16	25706	Adapter Plate Nut
17*	62171-GRN	Manifold Decal

*Not Shown

WOMA UPGRADES

UNx™ FLUID END UPGRADE – MODEL 3715W

WOMA
1502, 1503 PUMPS

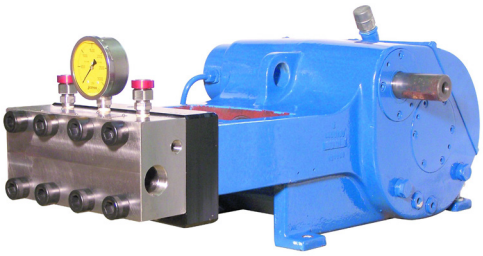

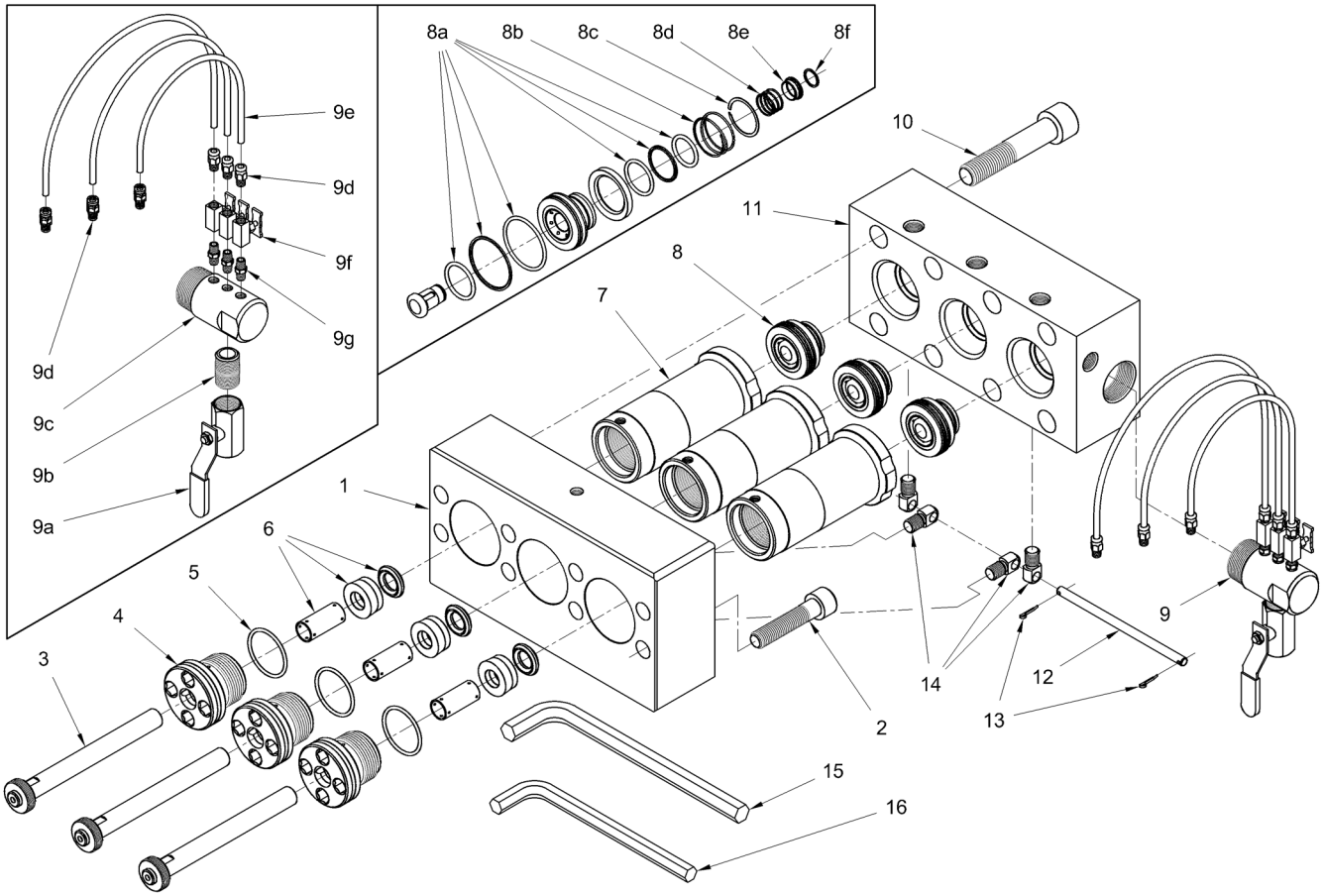

FLUID END SPECS

PART NO.	PLUNGER SIZE			CONNECTION TYPES**											MAX. OPERATING PRESSURE	
	NO.	DIAMETER					200 RPM		300 RPM		400 RPM		500 RPM			
		in	mm	TOP PORTS	DISCHARGE PORTS	SUPPLY PORTS	gpm	lpm	gpm	lpm	gpm	lpm	gpm	lpm	psi	bar
65187	#7	.735	18.67	1/2" NPT Female	1/2" NPT Female	1-1/2" NPT Female	4.1	16	6.2	23	8.2	31	10.3	39	15,000	1034
54560	#8	.800	20.32				4.9	18	7.3	28	9.8	37	12.2	46	15,000	1034
54555	#9	.900	22.86				6.2	23	9.3	35	12.4	47	15.5	59	12,500	861
54550	#10	1.00	25.40				7.6	29	11.4	43	15.3	58	19.1	72	10,000	689
54545	#11	1.125	28.58				9.7	37	14.5	55	19.3	73	24.2	92	8,000	551

**Displacement (flow) values represented refer to "theoretical" flow, neglecting inefficiency resulting compressibility of water and expansion of pressure-bearing components. Performance data is based on power end specifications published by the original equipment manufacturer; however, some power ends may differ those used to determine the values above. Contact a Jetstream Solutions Provider for help with fluid end selection.

UNx™ FLUID END UPGRADE – MODEL 3715W
WOMA
1502, 1503 PUMPS

PART BREAKDOWN

ITEM	PART NO.	DESCRIPTION
1	54426	Adapter Plate
2	29748	Adapter Plate Bolt
3	55489	#8 Plunger
	54501	#9 Plunger
	54502	#10 Plunger
	54503	#11 Plunger
4	54428	#8 Gland Nut
	54506	#9 Gland Nut
	54507	#10 Gland Nut
	54508	#11 Gland Nut
5	26416	O-Ring
6	51691	#8 Packing Set
	51674	#9 Packing Set
	51697	#10 Packing Set
	52233	#11 Packing Set
7	55491	#8 Stuffing Box
	54496	#9, #10 Stuffing Box
	54497	#11 Stuffing Box
8	51675	Uni-Valve
8a	50034	Uni-Valve Seal Kit

ITEM	PART NO.	DESCRIPTION
8b	26476	Discharge Valve Spring
8c	26470	Retaining Ring
8d	26472	Suction Valve Spring
8e	51664	Spring Retainer
8f	26474	Retaining Ring
9	51695	Lube Harness
9a	27101	Ball Valve
9b	25946	Nipple
9c	53242	Lube Manifold
9d	27732	Hose Fitting
9e	27740	Hose (Order in feet)
9f	27475	Needle Valve
9g	26465	Nipple
10	26462	Manifold Bolt
11	55266	Manifold
12	51666	Trunnion Rod
13	26468	Cotter Pin
14	51659	Trunnion
15	50064	3/4" Pump Wrench
16	26544	5/8" Pump Wrench

NOTE: Parts listed on this page are for current 3715W fluid end models. For first generation fluid end models, which utilize different stuffing boxes, plungers, manifold, and adapter plate, see the following page. Models can be most easily distinguished by the part number stamped on the top face of the fluid end manifold. Current models use manifold part number 55266 while first generation fluid ends use manifold part number 54424.

UNx™ FLUID END UPGRADE – MODEL 3715W (GEN 1)

WOMA
1502, 1503 PUMPS

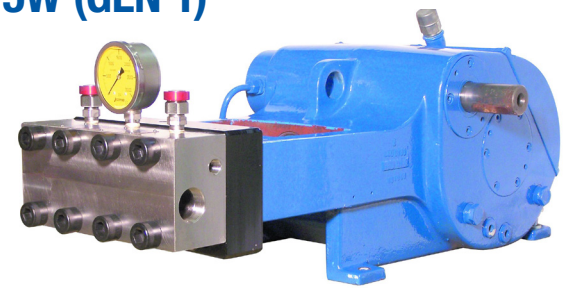

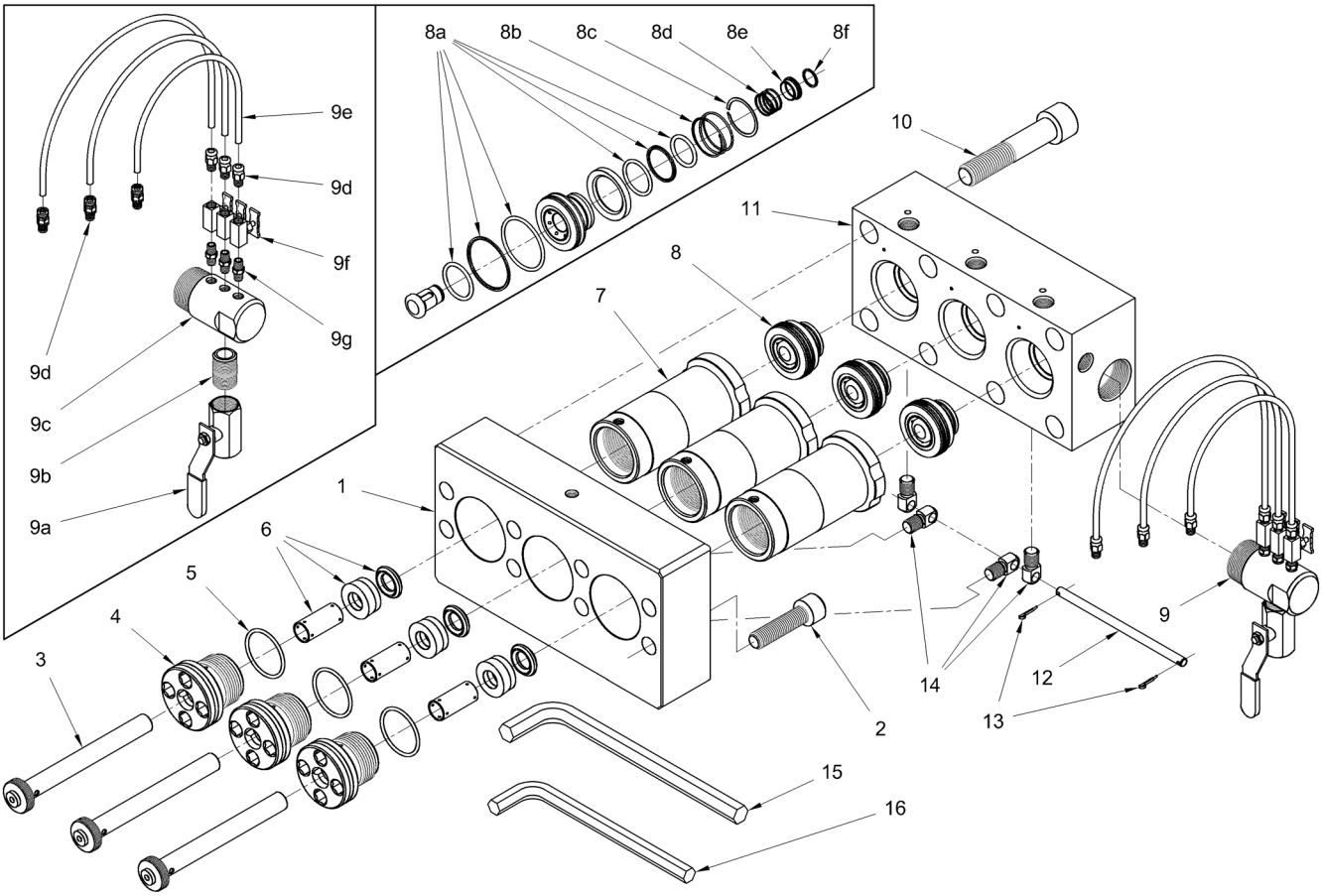

UNx™ FLUID END UPGRADE – MODEL 3715W (GEN 1)
WOMA
1502, 1503 PUMPS

PART BREAKDOWN

ITEM	PART NO.	DESCRIPTION
1	N/A	Adapter Plate
2	28616	Adapter Plate Bolt
3	54429	#8 Plunger
4	54428	#8 Gland Nut
5	26416	O-Ring
6	51691	#8 Packing Set
7	54427	#8 Stuffing Box
8	51675	Uni-Valve
8a	50034	Uni-Valve Seal Kit
8b	26476	Discharge Valve Spring
8c	26470	Retaining Ring
8d	26472	Suction Valve Spring
8e	51664	Spring Retainer
8f	26474	Retaining Ring
9	51695	Lube Harness

ITEM	PART NO.	DESCRIPTION
9a	27101	Ball Valve
9b	25946	Nipple
9c	53242	Lube Manifold
9d	27732	Hose Fitting
9e	27740	Hose (Order in feet)
9f	27475	Needle Valve
9g	26465	Nipple
10	26462	Manifold Bolt
11	N/A	Manifold
12	51666	Trunnion Rod
13	26468	Cotter Pin
14	51659	Trunnion
15	50064	3/4" Pump Wrench
16	26544	5/8" Pump Wrench

NOTE: Parts listed on this page are for first generation 3715W fluid end models no longer sold. These models utilize different stuffing boxes, plungers, manifold, and adapter plate than the current design. Models can be most easily distinguished by the part number stamped on the top face of the fluid end manifold. Current models use manifold part number 55266 while first generation fluid ends featured on this page use manifold part number 54424.

UNx™ FLUID END UPGRADE – MODEL 3715WZ

WOMA
150-Z PUMP

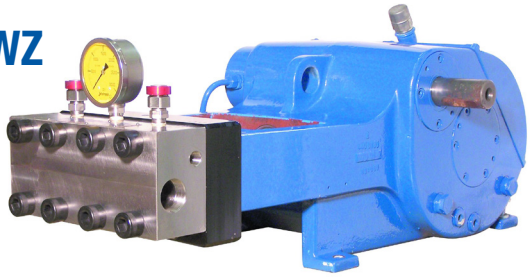

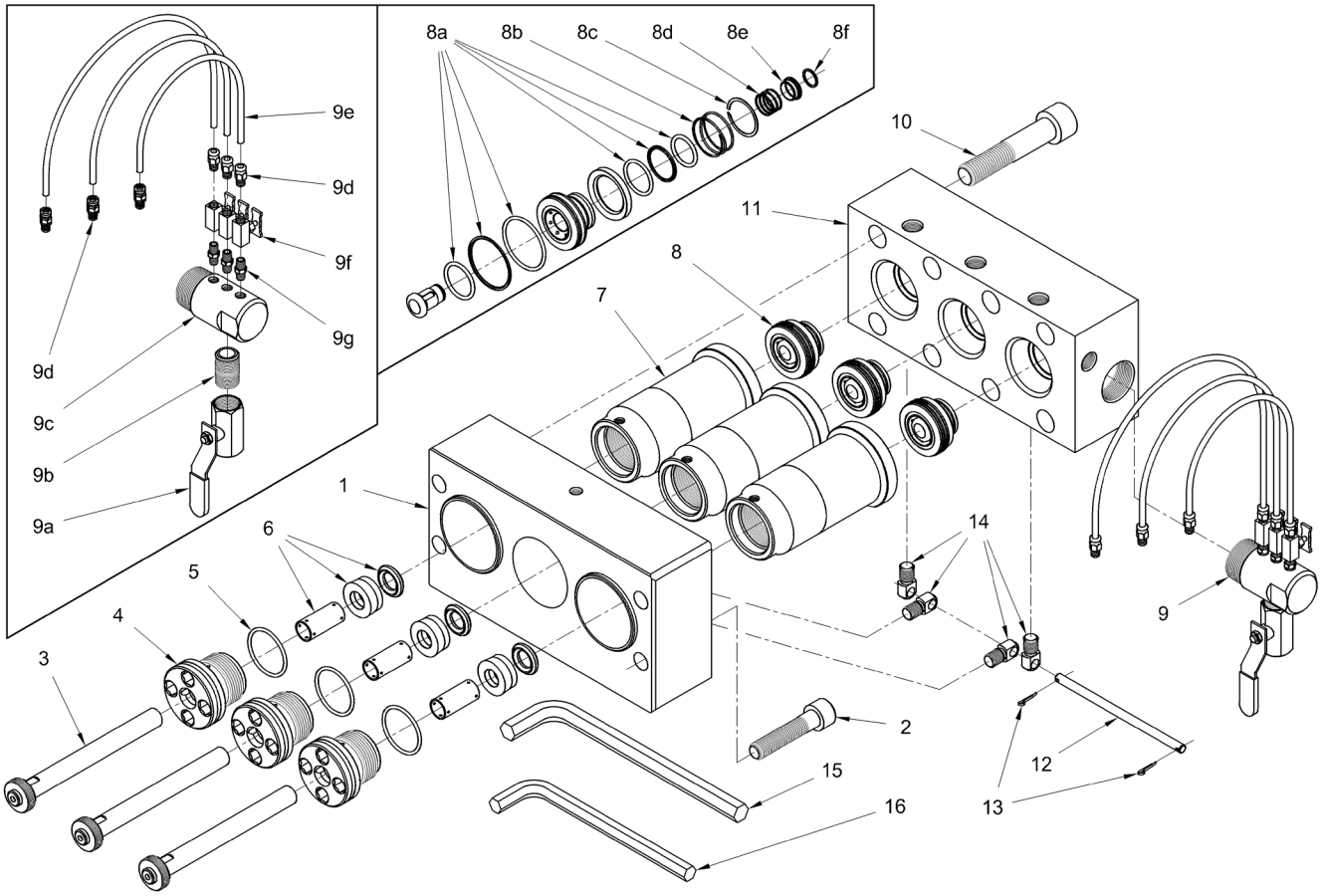

FLUID END SPECS

PART NO.	PLUNGER SIZE			CONNECTION TYPES**											MAX. OPERATING PRESSURE	
	NO.	DIAMETER					200 RPM		300 RPM		400 RPM		500 RPM			
		in	mm	TOP PORTS	DISCHARGE PORTS	SUPPLY PORTS	gpm	lpm	gpm	lpm	gpm	lpm	gpm	lpm	psi	bar
55270	#8	.800	20.32	1/2" NPT Female	1/2" NPT Female	1-1/2" NPT Female	4.9	18	7.3	28	9.8	37	12.2	46	15,000	1034
55275	#9	.900	22.86				6.2	23	9.3	35	12.4	47	15.5	59	12,500	861
55280	#10	1.00	25.40				7.6	29	11.4	43	15.3	58	19.1	72	10,000	689
55285	#11	1.125	28.58				9.7	37	14.5	55	19.3	73	24.2	92	8,000	551

**Displacement (flow) values represented refer to "theoretical" flow, neglecting inefficiency resulting compressibility of water and expansion of pressure-bearing components. Performance data is based on power end specifications published by the original equipment manufacturer; however, some power ends may differ those used to determine the values above. Contact a Jetstream Solutions Provider for help with fluid end selection.

UNx™ FLUID END UPGRADE – MODEL 3715WZ
WOMA
150-Z PUMP

PART BREAKDOWN

ITEM	PART NO.	DESCRIPTION
1	55267	Adapter Plate
2	29748	Adapter Plate Bolt
3	55489	#8 Plunger
	54501	#9 Plunger
	54502	#10 Plunger
	54503	#11 Plunger
4	54428	#8 Gland Nut
	54506	#9 Gland Nut
	54507	#10 Gland Nut
	54508	#11 Gland Nut
5	26416	O-Ring
6	51691	#8 Packing Set
	51674	#9 Packing Set
	51697	#10 Packing Set
	52233	#11 Packing Set
7	55268	#8 Stuffing Box
	55269	#9, #10 Stuffing Box
	55271	#11 Stuffing Box
8	51675	Uni-Valve
8a	50034	Uni-Valve Seal Kit

ITEM	PART NO.	DESCRIPTION
8b	26476	Discharge Valve Spring
8c	26470	Retaining Ring
8d	26472	Suction Valve Spring
8e	51664	Spring Retainer
8f	26474	Retaining Ring
9	51695	Lube Harness
9a	27101	Ball Valve
9b	25946	Nipple
9c	53242	Lube Manifold
9d	27732	Hose Fitting
9e	27740	Hose (Order in feet)
9f	27475	Needle Valve
9g	26465	Nipple
10	26462	Manifold Bolt
11	55266	Manifold
12	51666	Trunnion Rod
13	26468	Cotter Pin
14	51659	Trunnion
15	50064	3/4" Pump Wrench
16	26544	5/8" Pump Wrench

MULTIPLE MANUFACTURER UPGRADE

UNx™ FLUID END UPGRADE – MODEL 3015Q

AMERICAN AERO | WHITFORD FE145
NLB 10125
UNION QD100 (POWER END)

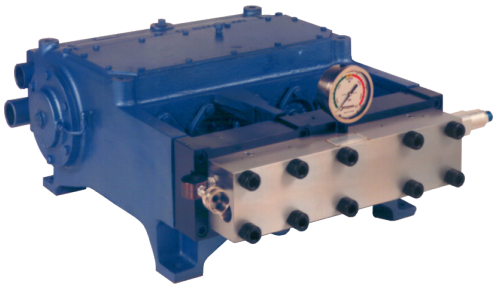

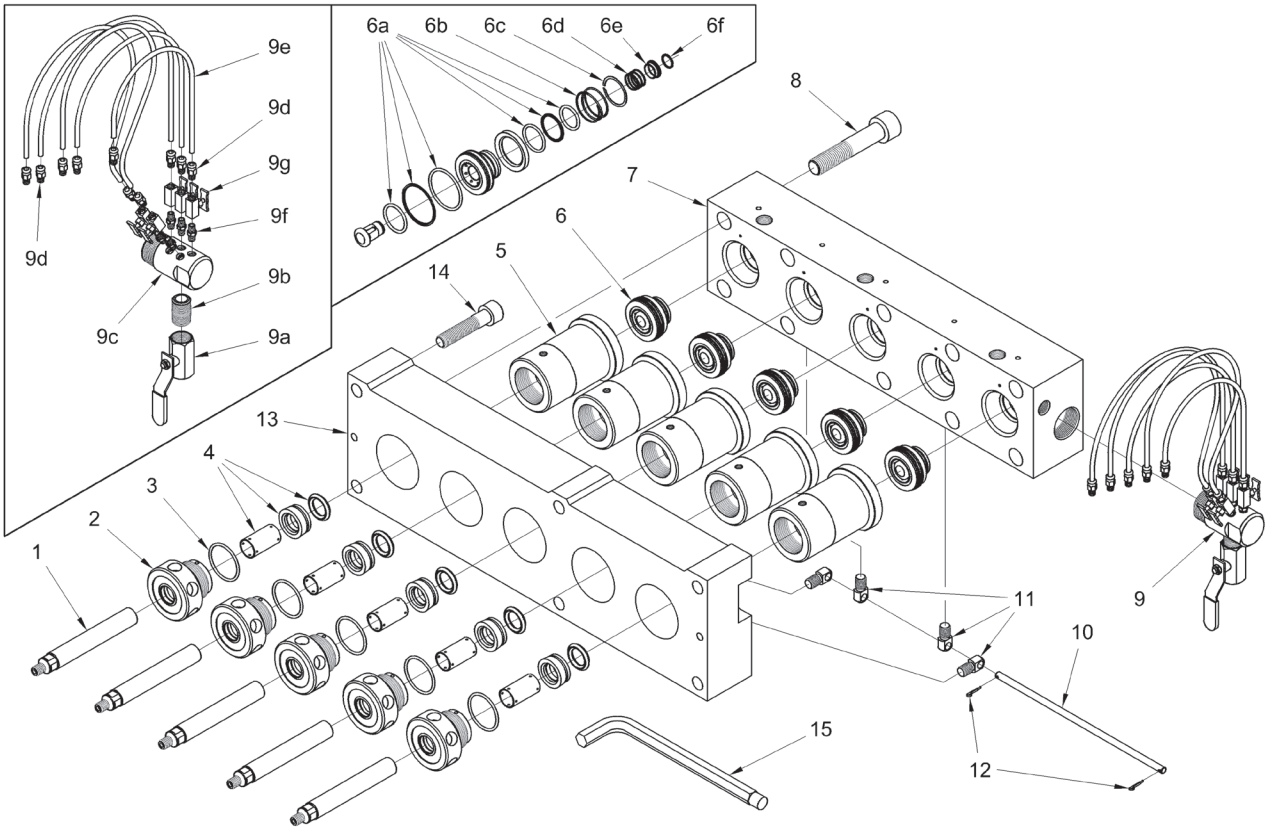

FLUID END SPECS

PART NO.	PLUNGER SIZE			CONNECTION TYPES**											MAX. OPERATING PRESSURE	
	NO.	DIAMETER					200 RPM		300 RPM		400 RPM		500 RPM			
		in	mm	TOP PORTS	DISCHARGE PORTS	SUPPLY PORTS	gpm	lpm	gpm	lpm	gpm	lpm	gpm	lpm	psi	bar
51820	#7	.735	18.67	1/2" NPT Female	1/2" NPT Female	1-1/2" NPT Female	8.3	31	11.0	42	13.8	52	15.2	58	15,000	1034
51825	#8	.800	20.32				9.8	37	13.1	49	16.3	62	18.0	68	12,500	861
51830	#9	.900	22.86				12.4	47	16.5	63	20.7	78	22.7	86	10,000	689
51835	#10	1.000	25.40				15.3	58	20.4	77	25.5	97	28.0	106	8,000	551
52285	#11	1.125	28.58				19.6	73	25.8	98	32.3	122	35.5	134	6,000	413

**Displacement (flow) values represented refer to "theoretical" flow, neglecting inefficiency resulting compressibility of water and expansion of pressure-bearing components. Performance data is based on power end specifications published by the original equipment manufacturer; however, some power ends may differ those used to determine the values above. Contact a Jetstream Solutions Provider for help with fluid end selection.

UNx™ FLUID END UPGRADE – MODEL 3015Q
AMERICAN AERO | WHITFORD FE145
NLB 10125
UNION QD100 (POWER END)

PART BREAKDOWN

ITEM	PART NO.	DESCRIPTION
1	51690	#7 Plunger
	51696	#8 Plunger
	51667	#9 Plunger
	51694	#10 Plunger
	52983	#11 Plunger
2	51617	#7 Gland Nut
	51619	#8 Gland Nut
	51621	#9 Gland Nut
	51623	#10 Gland Nut
	52231	#11 Gland Nut
3	26416	O-Ring
4	51689	#7 Packing Set
	51691	#8 Packing Set
	51674	#9 Packing Set
	51697	#10 Packing Set
	52233	#11 Packing Set
5	51611	#7, #8 Stuffing Box
	51671	#9, #10 Stuffing Box
	52232	#11 Stuffing Box
6	51675	Uni-Valve
6a	50034	Uni-Valve Seal Kit

ITEM	PART NO.	DESCRIPTION
6b	26476	Discharge Valve Spring
6c	26470	Retaining Ring
6d	26472	Suction Valve Spring
6e	51664	Spring Retainer
6f	26474	Retaining Ring
7	50887	Manifold
8	26462	Manifold Bolt
9	51490	Lube Harness
9a	27101	Ball Valve
9b	25946	Nipple
9c	53793	Lube Manifold
9d	26874	Hose Fitting
9e	26469	Hose (Order in feet)
9f	26465	Nipple
9g	27475	Needle Valve
10	51016	Trunnion Rod
11	51659	Trunnion
12	26468	Cotter Pin
13	50897	Adapter Plate
14	25427	Adapter Plate Bolt
15	50064	Pump Wrench

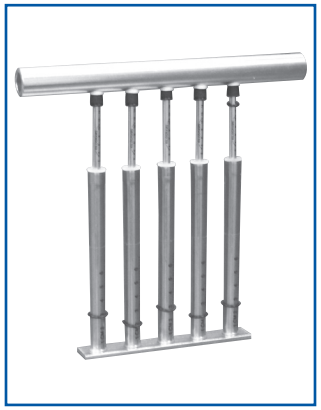

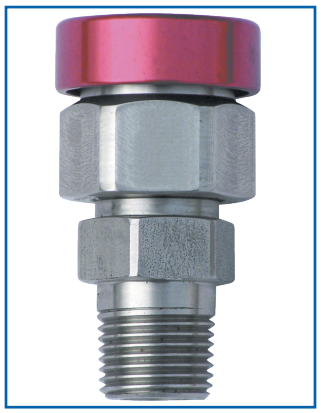

PUMP ACCESSORIES

ALL THE PARTS YOU NEED, NONE OF THE PARTS YOU DON'T.

Jetstream offers recommended pump and fluid end parts to ensure a safe and uninterrupted workday. From spare parts packages to filters to pump tools, necessary and optional parts associated with the bareshaft pump and fluid end are provided in this section. These parts are the skeleton to the functionality of the fluid end. Easily maintained parts ensure the pump is performing at required pressures throughout the entire job.

The Pump Accessories section includes the following parts and packages:

- Fluid End Spare Parts Packages
- Pump Tools (Wrenches, Studs, Lubricants)
- Filters and Filter Assemblies
- Pressure Gauges
- Rupture Disc Assembly and Discs
- Valves (Bypass, Air-Operated, Hydraulic, Electric, Multi-Gun Valves)
- Hydro-Throttle Assemblies
- Multi-Unit Manifold
- Hydrostatic Test Valve (HTV)

SPARE PARTS PACKAGES
UNx™ FLUID END

A must-have for field repairs, these packages include all major fluid end replacement parts packaged together for easy transport and storage.

- Available for most 15K UNx fluid ends
- Packaged in a top-of-the-line, waterproof case with tough custom foam inlay
- Contents: 1 or 3 Plungers, 3 Uni-Valves, 3 Packing Sets, 3 Uni-Valve Seal Kits, Locking waterproof case and keys, 10 Burst Discs (5 each at primary and secondary relief pressures, or 10 at the same relief pressure if only one rupture disc holder is used)

1 PLUNGER PACKAGES								
PART NO.	PRESSURE (PSI)	DESCRIPTION	PART NO.	PRESSURE (PSI)	DESCRIPTION	PART NO.	PRESSURE (PSI)	DESCRIPTION
S1301-6-11-S	6,000	3015 #11	S142H-10-11-S	10,000	4215HF #11	FLUID END CONVERSIONS - 1 PLUNGER PKGS		
S1301-8-10-B	8,000	3015 #10	S142H-10-11-B	10,000	4215HF #11	S1300-6-11-B	6,000	3015B,N,W #11
S1301-8-10-S	8,000	3015 #10	S142H-10-12-B	10,000	4215HF #12	S1300-6-11-S	6,000	3015B,N,W #11
S1301-8-11-B	8,000	3015 #11	S142H-10-12-S	10,000	4215HF #12	S1300-8-10-B	8,000	3015B,N,W #10
S1301-8-11-S	8,000	3015 #11	S142H-10-13-S	10,000	4215HF #13	S1300-8-10-S	8,000	3015B,N,W #10
S1301-10-9-B	10,000	3015 #9	S142H-10-13-B	10,000	4215HF #13	S1300-8-11-B	8,000	3015B,N,W #11
S1301-10-9-S	10,000	3015 #9	S142H-10-15-S	10,000	4215HF #15	S1300-8-11-S	8,000	3015B,N,W #11
S1301-10-10-B	10,000	3015 #10	S142H-10-15-B	10,000	4215HF #15	S1300-10-10-B	10,000	3015B,N,W #10
S1301-10-10-S	10,000	3015 #10	S142H-12-10-B	12,500	4215HF #10	S1300-10-10-S	10,000	3015B,N,W #10
S1301-12-8-B	12,500	3015 #8	S142H-12-10-S	12,500	4215HF #10	S1300-10-9-B	10,000	3015B,N,W #9
S1301-12-8-S	12,500	3015 #8	S142H-12-11-B	12,500	4215HF #11	S1300-10-9-S	10,000	3015B,N,W #9
S1301-12-9-B	12,500	3015 #9	S142H-12-11-S	12,500	4215HF #11	S1300-12-8-B	12,500	3015B,N,W #8
S1301-12-9-S	12,500	3015 #9	S142H-12-12-B	12,500	4215HF #12	S1300-12-8-S	12,500	3015B,N,W #8
S1301-15-7-B	15,000	3015 #7	S142H-12-12-S	12,500	4215HF #12	S1300-12-9-B	12,500	3015B,N,W #9
S1301-15-7-S	15,000	3015 #7	S142H-12-13-B	12,500	4215HF #13	S1300-12-9-S	12,500	3015B,N,W #9
S1301-15-8-B	15,000	3015 #8	S142H-12-13-S	12,500	4215HF #13	S1300-15-7-B	15,000	3015B,N,W #7
S1301-15-8-S	15,000	3015 #8	S142H-15-10-S	15,000	4215HF #10	S1300-15-7-S	15,000	3015B,N,W #7
S142H-5-15-S	5,000	4215HF #15	S142H-15-10-B	15,000	4215HF #10	S1300-15-8-B	15,000	3015B,N,W #8
S142H-6-15-S	6,000	4215HF #15	S142H-15-11-S	15,000	4215HF #11	S1300-15-8-S	15,000	3015B,N,W #8
S142H-6-16-S	6,000	4215HF #16	S142H-15-11-B	15,000	4215HF #11	S1371-15-8-B	15,000	3015W GEN I #8
S142H-8-13-S	8,000	4215HF #13	S142H-15-12-B	15,000	4215HF #12	S1371-15-8-S	15,000	3715W GEN I #8
S142H-8-13-B	8,000	4215HF #13	S142H-15-12-S	15,000	4215HF #12	S137W-8-11-B	8,000	3715W,WZ #11
S142H-8-15-S	8,000	4215HF #15	S142H-15-9-B	15,000	4215HF #9	S137W-8-11-S	8,000	3715W,WZ #11
S142H-8-15-B	8,000	4215HF #15	S142H-15-9S	15,000	4215HF #9	S137W-10-10-B	10,000	3715W,WZ #10
S142H-8-16-S	8,000	4215HF #16				S137W-10-10-S	10,000	3715W,WZ #10
S142H-8-16-B	8,000	4215HF #16				S137W-12-9-B	12,500	3715W,WZ #9

15,000 PSI (1,034 BAR)

Jetstream® Subsidiary of Federal Signal Corporation

3 PLUNGER PACKAGES								
PART NO.	PRESSURE (PSI)	DESCRIPTION	PART NO.	PRESSURE (PSI)	DESCRIPTION	PART NO.	PRESSURE (PSI)	DESCRIPTION
SP301-6-11-B	6,000	3015 #11	SP421-15-9-B	15,000	4215 #9	FLUID END CONVERSIONS - 3 PLUNGER PKGS		
SP301-6-11-S	6,000	3015 #11	SP421-15-9-S	15,000	4215 #9	SP300-6-11-B	6,000	3015B,N,W #11
SP301-8-10-B	8,000	3015 #10	SP421-15-10-B	15,000	4215 #10	SP300-6-11-S	6,000	3015B,N,W #11
SP301-8-10-S	8,000	3015 #10	SP421-15-10-S	15,000	4215 #10	SP300-8-10-B	8,000	3015B,N,W #10
SP301-8-11-B	8,000	3015 #11	SP421-15-11-B	15,000	4215 #11	SP300-8-10-S	8,000	3015B,N,W #10
SP301-8-11-S	8,000	3015 #11	SP421-15-11-S	15,000	4215 #11	SP300-8-11-B	8,000	3015B,N,W #11
SP301-10-9-B	10,000	3015 #9	SP421-15-12-B	15,000	4215 #12	SP300-8-11-S	8,000	3015B,N,W #11
SP301-10-9-S	10,000	3015 #9	SP421-15-12-S	15,000	4215 #12	SP300-10-9-B	10,000	3015B,N,W #9
SP301-10-10-B	10,000	3015 #10	SP42H-5-15-S	5,000	4215HF #15	SP300-10-9-S	10,000	3015B,N,W #9
SP301-10-10-S	10,000	3015 #10	SP42H-6-15-S	6,000	4215HF #15	SP300-10-10-B	10,000	3015B,N,W #10
SP301-10-11-S	10,000	3015 #11	SP42H-6-16-S	6,000	4215HF #16	SP300-10-10-S	10,000	3015B,N,W #10
SP301-12-8-B	12,500	3015 #8	SP42H-8-13-B	8,000	4215HF #13	SP300-12-8-B	12,500	3015B,N,W #8
SP301-12-8-S	12,500	3015 #8	SP42H-8-13-S	8,000	4215HF #13	SP300-12-8-S	12,500	3015B,N,W #8
SP301-12-9-B	12,500	3015 #9	SP42H-8-15-B	8,000	4215HF #15	SP300-12-9-B	12,500	3015B,N,W #9
SP301-12-9-S	12,500	3015 #9	SP42H-8-15-S	8,000	4215HF #15	SP300-12-9-S	12,500	3015B,N,W #9
SP301-15-7-B	15,000	3015 #7	SP42H-8-16-B	8,000	4215HF #16	SP300-15-7-B	15,000	3015B,N,W #7
SP301-15-7-S	15,000	3015 #7	SP42H-8-16-S	8,000	4215HF #16	SP300-15-7-S	15,000	3015B,N,W #7
SP301-15-8-B	15,000	3015 #8	SP42H-10-11-B	10,000	4215HF #11	SP300-15-8-B	15,000	3015B,N,W #8
SP301-15-8-S	15,000	3015 #8	SP42H-10-11-S	10,000	4215HF #11	SP300-15-8-S	15,000	3015B,N,W #8
SP301-15-9-B	15,000	3015 #9	SP42H-10-12-B	10,000	4215HF #12	SP371-15-8-B	15,000	3715W GEN I #8
SP301-15-9-S	15,000	3015 #9	SP42H-10-12-S	10,000	4215HF #12	SP371-15-8-S	15,000	3715W GEN I #8
SP421-5-15-S	5,000	4215 #5	SP42H-10-13-B	10,000	4215HF #13	SP37W-8-11-B	8,000	3715W,WZ #11
SP421-6-15-S	6,000	4215 #6	SP42H-10-13-S	10,000	4215HF #13	SP37W-8-11-S	8,000	3715W,WZ #11
SP421-8-13-B	8,000	4215 #13	SP42H-10-15-B	10,000	4215HF #15	SP37W-10-10-B	10,000	3715W,WZ #10
SP421-8-13-S	8,000	4215 #13	SP42H-10-15-S	10,000	4215HF #15	SP37W-10-10-S	10,000	3715W,WZ #10
SP421-8-15-B	8,000	4215 #15	SP42H-12-10-B	12,500	4215HF #10	SP37W-15-8-B	15,000	3715W,WZ #8
SP421-8-15-S	8,000	4215 #15	SP42H-12-10-S	12,500	4215HF #10	SP37W-15-8-S	15,000	3715W,WZ #8
SP421-10-11-B	10,000	4215 #11	SP42H-12-11-B	12,500	4215HF #11	SP37W-12-9-B	12,500	3715W,WZ #9
SP421-10-11-S	10,000	4215 #11	SP42H-12-11-S	12,500	4215HF #11	SP37W-12-9-S	12,500	3715W,WZ #9
SP421-10-12-B	10,000	4215 #12	SP42H-12-12-B	12,500	4215HF #12			
SP421-10-12-S	10,000	4215 #12	SP42H-12-12-S	12,500	4215HF #12			
SP421-10-13-B	10,000	4215 #13	SP42H-12-13-B	12,500	4215HF #13			
SP421-10-13-S	10,000	4215 #13	SP42H-12-13-S	12,500	4215HF #13			
SP421-10-15-B	10,000	4215 #15	SP42H-15-9-B	15,000	4215HF #9			
SP421-10-15-S	10,000	4215 #15	SP42H-15-9-S	15,000	4215HF #9			
SP421-12-10-B	12,500	4215 #10	SP42H-15-10-B	15,000	4215HF #10			
SP421-12-10-S	12,500	4215 #10	SP42H-15-10-S	15,000	4215HF #10			
SP421-12-11-B	12,500	4215 #11	SP42H-15-11-B	15,000	4215HF #11			
SP421-12-11-S	12,500	4215 #11	SP42H-15-11-S	15,000	4215HF #11			
SP421-12-12-B	12,500	4215 #12	SP42H-15-12-B	15,000	4215HF #12			
SP421-12-12-S	12,500	4215 #12	SP42H-15-12-S	15,000	4215HF #12			
SP421-12-13-B	12,500	4215 #13	P42H-S18	6,800	4215HF GEN II #18			
SP421-12-13-S	12,500	4215 #13						

TOOLS

PUMP WRENCHES

The only special tool needed to work on a Jetstream UNx pump. For use with manifold and gland nut.

SIZE 7/8″ PART NO. 50889		SIZE 3/4″ PART NO. 50064	SIZE 5/8″ PART NO. 26544
6015	4515B	3015	3115T
5015Q	4215N	3015B	3515Q
4215	4215QN	3015N	3715W
3615	4015B	3015QN	3715WZ
5015G	3715B	3015Q	
		3015W	

MANIFOLD MOUNTING STUDS

For easy and safe removal of manifolds during pressure conversions that require a manifold change (e.g. 10,000psi-40,000psi). To use, replace the top two outer manifold bolts with the mounting studs. Then, remove all bolts and the trunnion rod (hinge rod). The manifold can then be easily slid out and replaced with another. Sold individually.

FOR USE WITH THE FOLLOWING MODELS:		
PART NO. 62093	PART NO. 54261	PART NO. 56742
6015	4215	3015
	3615	3015B
	4515B	3015N
	4215N	
	4215QN	
	4015B	
	3715B	
	3715WZ	
	3515Q	
	3115T	

TOOLS

BELT TENSION GAUGE

Ensure pump drive belts are properly tensioned for proper pump operation and maximum belt life. For use with V-belts.
Part No. 26993

BELT TENSION GAUGE

For use with Power Band and synchronous belts.

Part No. 62140

VALVE PULLER

The perfect tool for easily extracting uni-valves from the manifold. Sold individually.

Part No. 70179

O-RING PICK

6-7/8" length with cushioned grip

Part No. 63443

3/16" T-WRENCH (HEX KEY)

Hex key for ease of nozzle maintenance. Short Length with comfort handle.

Part No. 63442

1/4" T-WRENCH (HEX KEY)

Hex key for ease of nozzle maintenance. Short Length with comfort handle.

Part No. 63814

GLAND NUT TOOL

3/4" Drive tool for ease of gland nut removal for pumps.

PART NO.	PUMP SERIES
62110	4200/5000
66607	3000
66608	6000

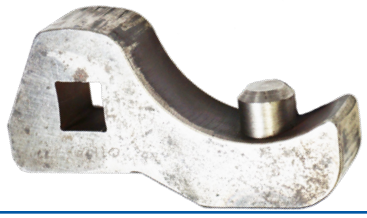

PUMP OPERATION AND MAINTENANCE DVD

An excellent learning tool, the Pump Operation and Maintenance DVD from Jetstream covers important topics such as waterblast safety, waterblast unit and pump maintenance and operation.

Part No. 70002

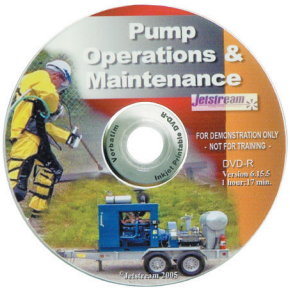

1/2″ VALVES
Part No. 53440

Part No. 55120

3/4″ VALVES
Part No. 53845

Part No. 54995

1″ VALVES
Part No. 53935

Part No. J55705

DUMP-STYLE DIVERTER VALVES
AIR-OPERATED

The Air-Operated Diverter Valve allows an operator to remotely control pressure in cleaning applications up to 15,000 psi. When air is sent to the cylinder, the valve closes and allows the system to build pressure. The valve opens when the air is exhausted, reducing system pressure to near atmospheric.

- 30-second field replaceable cartridge design for minimal downtime
- Remote pneumatic operation for reduced operator fatigue and added convenience and safety
- Pipe threaded (NPT) inlet and outlet
- Heavy-duty air cylinder
- All pressure-bearing components precision machined stainless steel
- Available in three sizes with or without plated steel base

ASSEMBLY PART NO.*	MOUNTING STYLE	CONNECTION TYPE		MAXIMUM FLOW RATE		MAX. OPERATING PRESSURE		INLET AIR PRESSURE				WEIGHT	
								MIN.		MAX.			
		INLET & OUTLET	DIFFUSER OUTLET	gpm	lpm	psi	bar	psi	bar	psi	bar	lb	kg
53440	Pump	1/2" NPT Female	3/4" NPT Female	35	130	15,000	1034	70	4.8	125	8.6	6.5	2.9
55120	Base											16.1	7.3
53845	Pump	3/4" NPT Female	1" NPT Female	75	284							7.7	3.5
54995	Base											17.3	7.9
53935	Pump	1" NPT Female	1-1/4" NPT Female	125	473							12.7	5.8
J55705	Base											22.3	10.1

REPLACEMENT CARTRIDGE

Diverter valve utilizes a cartridge, to completely rebuild the dump valve in about 30 seconds.

Part No. 50902
(for 53440)

Part No. 53915
(for 53935)

Part No. 52750
(for 53845)

15,000 PSI (1,034 BAR)

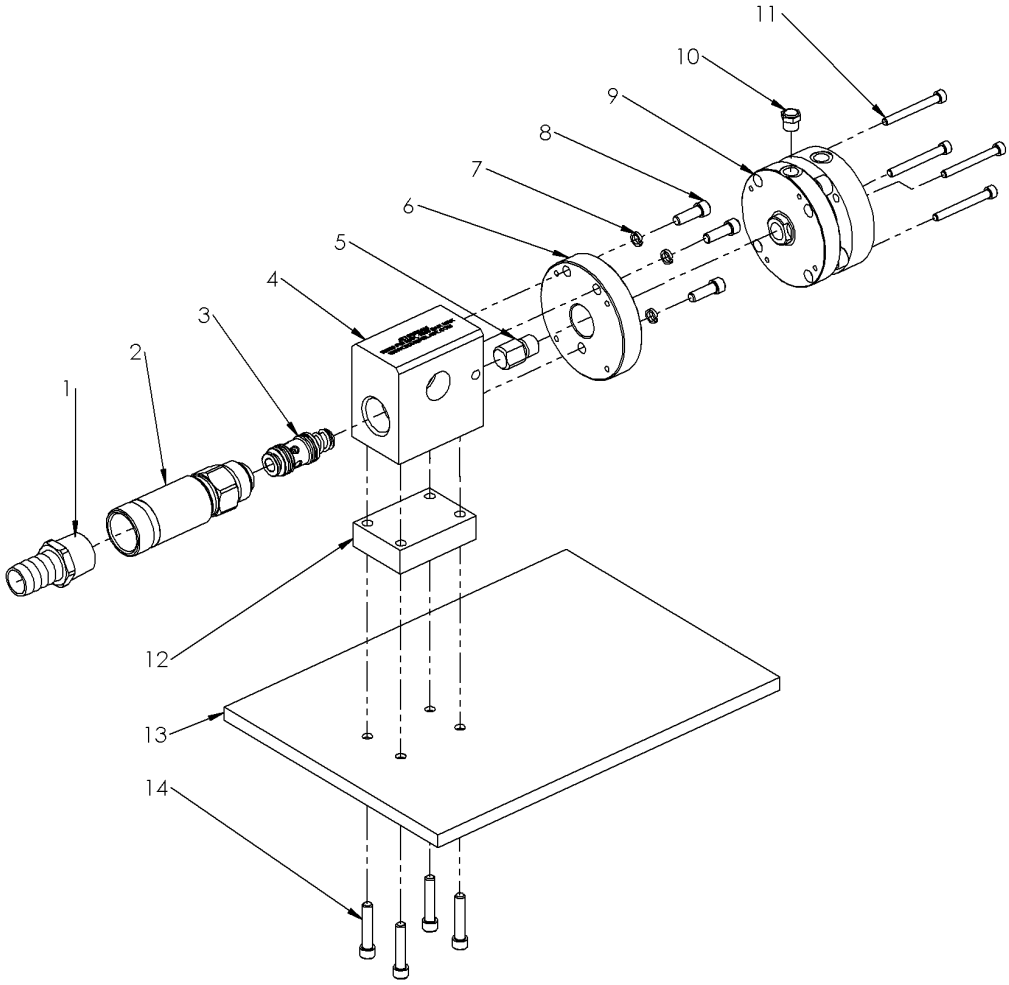

PART BREAKDOWN

ITEM	PART NO.	DESCRIPTION	ITEM	PART NO.	DESCRIPTION
1	25796	Hose Barb, 3/4" (for 53440)	7	J70633	Washer (53440 & 53845)
	27757	Hose Barb, 1" (for 53845)	8	25206	Capscrew (53440 & 53845)
2	50460	Diffuser, C-15 Series (53440)		J70816	Capscrew (53935)
	51638	Diffuser, CF 3/4" Mag (53845)	9	27251	Air Cylinder (53440 & 53845)
	53959	Diffuser, DCF-15 1" Mag (53935)		54342	Air Cylinder, 2.5" (53935)
3	50902	Cartridge, C-15 (53440)	10	58848	Muffler (53440 & 53845)
	52750	Cartridge, CF Mag (53845)		28364	Muffler (53935)
	53915	Cartridge, C-15 Ultra Mag (53935)	11	27107	Capscrew (53440 & 53845)
4	53368	Body, Durasafe DCF-15 (53440)		65656	Capscrew (53935)
	53549	Body, Durasafe DCF-15 Mag (53845)	12*	53788	Spacer
	53954	Body, DCF-15 1" Ultra Mag (53935)	13*	53384	Base Plate
5	56999	Pusher, Air Cylinder (53440 & 53845)	14*	26126	Capscrew
	53424	Pusher, Air Cylinder (53935)			
6	J56366	Adapter Plate (53440 & 53845)			
	54321	Mounting Plate (53935)			

* For Base-Mounted Valves.

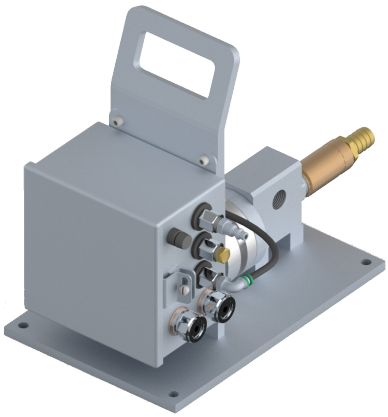

DUMP STYLE DIVERTER VALVES
ELECTRIC/AIR-OPERATED

The Electric/Air-Operated Diverter Valve allows an operator to remotely control pressure in cleaning applications up to 15,000 psi, specifically in automated cleaning processes. Reduces operator fatigue by actuating the system electronically rather than mechanically.

When electric voltage is present, the air cylinder closes the valve and allows the system to build pressure. The valve opens when the voltage is removed, reducing system pressure to near atmospheric.

- Quick cartridge overhaul for easy field maintenance
- Remote operation for added operator convenience and safety
- Electric operation for reduced operator fatigue
- Valve operates at air pressures between 70-125 psi (4.8-8.6 bar) using a 1/8" NPT Female air connection

ASSEMBLY PART NO.	VOLTAGE	INLET & OUTLET CONNECTIONS	MAXIMUM FLOW RATE		MAX. OPERATING PRESSURE		DIMENSIONS (H x W x D)		WEIGHT	
			gpm	lpm	psi	bar	in	mm	lb	kg
53165	12 VDC	1/2" NPT Female	35	130	15,000	1034	12 X 8 X 17	305 x 203 x 432	36	16
53695	120 VAC	1/2" NPT Female	35	130	15,000	1034				
54724	12 VDC	1" NPT Female	125	473	15,000	1034				
59459	110 VAC	1" NPT Female	125	473	15,000	1034				
54777	24 VDC	1" NPT Female	125	473	15,000	1034				

PUMP ACCESSORIES

15,000 PSI (1,034 BAR)

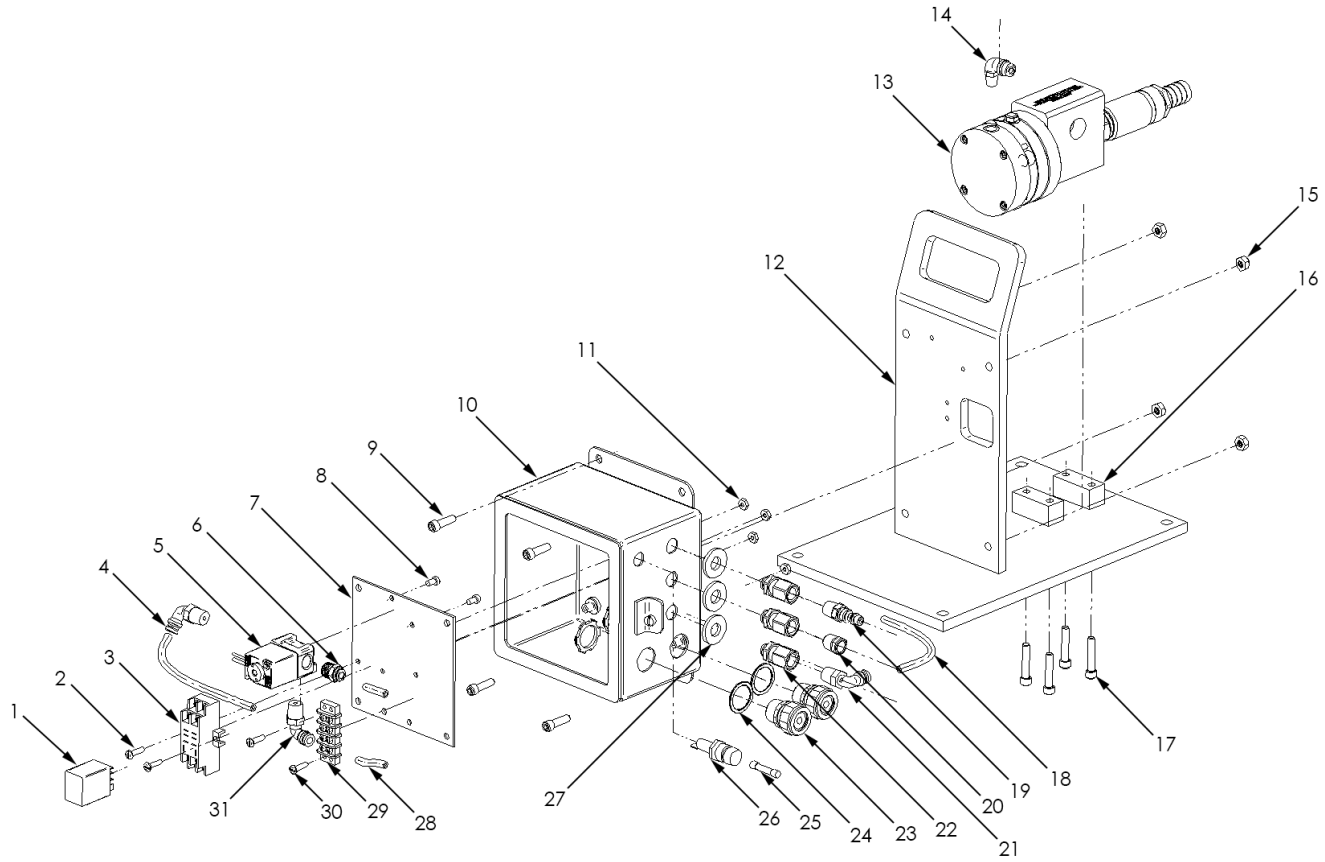

PART BREAKDOWN

ITEM	PART NO.	DESCRIPTION	ITEM	PART NO.	DESCRIPTION
1	27349	Relay, 12VDC	15	26711	Nut
	27631	Relay, 120 VAC	16	53203	Mounting Base
	29155	Relay, 24 VDC	17	26126	Capscrew
2	58864	Capscrew	18	27740	Plastic Tubing
3	29158	Relay Socket	19	28223	Nipple, Q.D.
4	27740	Plastic Tubing	20	28364	Muffler
5	65002	Valve, 3 Way, 12VDC	21	28367	Elbow
	65001	Valve, 3 Way, 120VAC	22	65011	Bulkhead Fitting
	27783	Valve, 3 Way, 24VDC	23	64998	Gland
6	52756	Adapter	24	64999	Washer
7	58868	Mounting Panel	25	27348	Fuse
8	27380	Capscrew	26	25644	Fuse Holder
9	58865	Capscrew	27	65012	Washer
10	58867	Electrical Box	28	27740	Plastic Tubing
11	29799	Nut	29	27347	Block, Terminal
12	53203	Mounting Base	30	58864	Capscrew
13	53440	Air-Operated Valve, 1/2"	31	28367	Elbow
	53935	Air-Operated Valve, 1"	30	58864	Capscrew
14	28367	Elbow	31	28367	Elbow

3/4″ VALVES
Part No. 62003

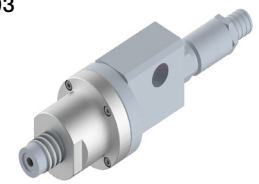

1″ VALVES
Part No. 65368

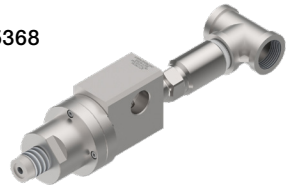

DUMP STYLE DIVERTER VALVES
HYDRAULIC-OPERATED

The Hydraulic-Operated Diverter Valve allows an operator to remotely control pressure in cleaning applications up to 15,000 psi, specifically in automated cleaning processes. Reduces operator fatigue by actuating the system hydraulically rather than mechanically.

When hydraulic pressure is sent to the cylinder, the valve closes and allows the system to build pressure. The valve opens when the hydraulic pressure is exhausted, reducing system pressure to near atmospheric.

- Quick cartridge overhaul for easy field maintenance
- Remote operation for added operator convenience and safety
- Electric operation for reduced operator fatigue

ASSEMBLY PART NO.*	MOUNTING STYLE	CONNECTION TYPE		MAXIMUM FLOW RATE		MAX. OPERATING PRESSURE		AIR PRESSURE REQD.				WEIGHT	
								MIN.		MAX.			
		INLET & OUTLET	DIFFUSER OUTLET	gpm	lpm	psi	bar	psi	bar	psi	bar	lb	kg
62003	Base	3/4" NPT Female	1" NPT Female	75	284	15,000	1034	70	4.8	125	8.6	7.7	3.5
65368	Base	1" NPT Female	1-1/4" NPT Female	125	473							12.7	5.8

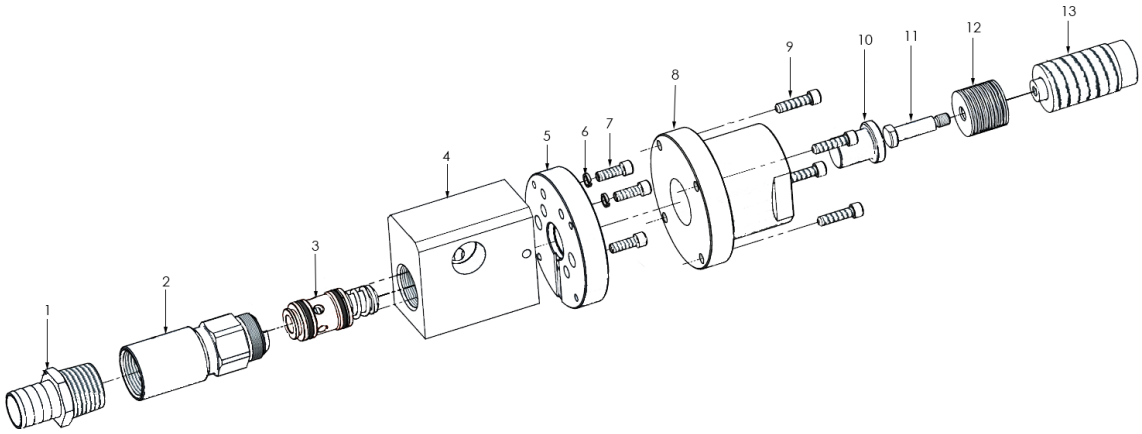

PART BREAKDOWN (PART NO. 62003)

ITEM	PART NO.	DESCRIPTION	ITEM	PART NO.	DESCRIPTION
1	27757	Hose Barb	8	60075	Adapter, Hydraulic Cylinder
2	51638	Diffuser	9	26689	Capscrew
3	52750	Cartridge	10	60025	Pusher, Hydraulic Cylinder
4	53549	Body	11	60027	Guide, Spring
5	54321	Mounting Plate	12	60026	Spring, Disc
6	J70633	Washer	13	60079	Hydraulic Cylinder
7	25206	Capscrew			

15,000 PSI (1,034 BAR)

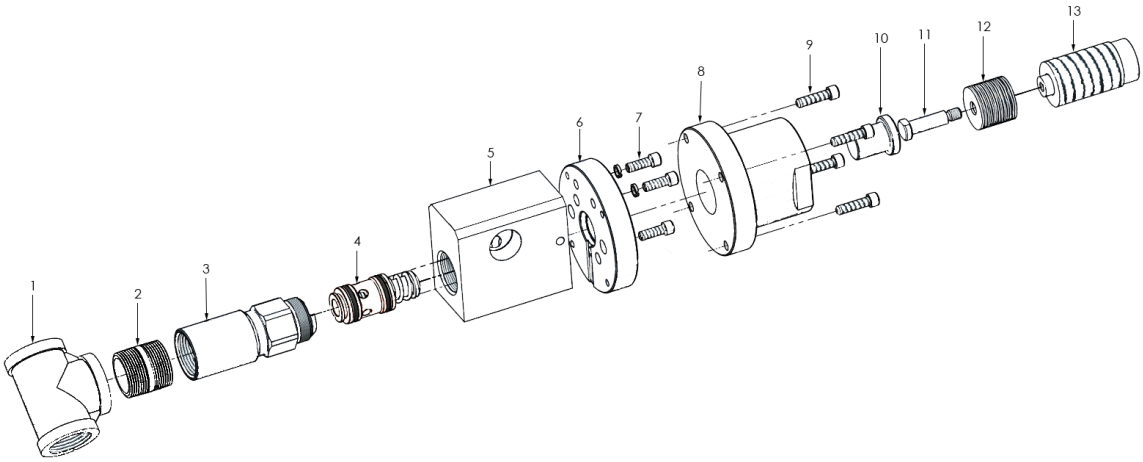

PART BREAKDOWN (PART NO. 65368)

ITEM	PART NO.	DESCRIPTION	ITEM	PART NO.	DESCRIPTION
1	62259	Tee, 1-1/4" NPT	8	60075	Adapter, Hydraulic Cylinder
2	57432	Nipple	9	26689	Capscrew
3	53959	Diffuser	10	60025	Pusher, Hydraulic Cylinder
4	53915	Cartridge	11	60027	Guide, Spring
5	53954	Body	12	60026	Spring, Disc
6	54321	Mounting Plate	13	60079	Hydraulic Cylinder
7	J70816	Capscrew			

SHUT-IN STYLE DIVERTER VALVES
AIR-OPERATED

Shut-In, Air-Operated Diverter Valves allow an operator to remotely control pressure in cleaning applications up to 15,000 psi. When air is sent to the cylinder, the valve opens to allow water to the nozzle. The valve closes when the air is exhausted, preventing water reaching the nozzle while maintaining system pressure.

- Use with plunger style pumps such as the UNx® requires the installation of a Shut-In Regulator Valve (see page C-28)
- 30-second field replaceable cartridge design for minimal downtime
- Remote pneumatic operation for reduced operator fatigue and added convenience and safety
- Pipe threaded (NPT) inlet and outlet
- Heavy-duty air cylinder
- All pressure-bearing components precision machined stainless steel
- Available with or without plated steel base
- Valve operates at air pressures between 70-125 psi (4.8-8.6 bar) using a 1/8" NPT Female air connection

PART NO.	MOUNTING	INLET & OUTLET CONNECTIONS*	MAXIMUM FLOW		DIMENSIONS (H X W X D)		WEIGHT		MAX. OPERATING PRESSURE	
			gpm	lpm	in	mm	lb	kg	psi	bar
53680	No Base	1/2″ NPT Female	35	132	3.3 x 3.1 x 6.1	85 x 79 x 154	6.4	2.9	15,000	1034
J55710	Base-Mount	1/2″ NPT Female	35	132	4.0 x 8.0 x 11.3	101 x 203 x 286	16.0	7.3	15,000	1034

*See details on all connection types in Section I.

REPLACEMENT CARTRIDGE

15,000 psi Shut-in Style Diverter Valves utilize the CPSi-15 cartridge, shown above, to completely rebuild the gun in about 30 seconds! **Part No. 60419**

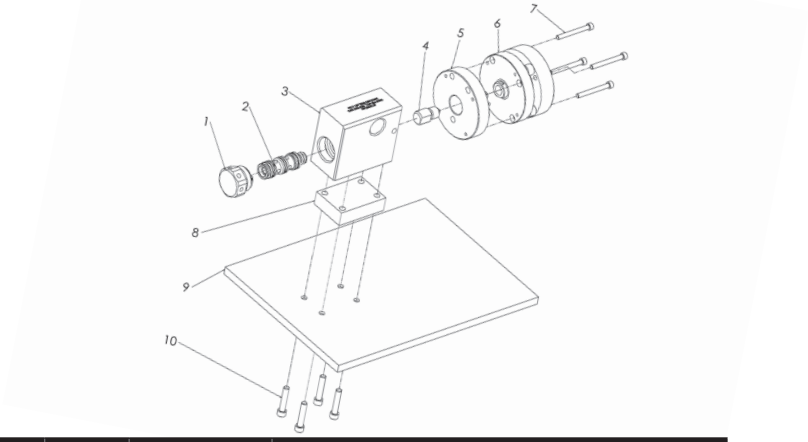

PART BREAKDOWN

ITEM	PART NO.	DESCRIPTION	ITEM	PART NO.	DESCRIPTION
1	52543	Cartridge Plug	7	27107	Capscrew
2	60419	Cartridge	8	53788	Mounting Block (Base Mounted Model)
3	53374	Body	9	53384	Base (Base Mounted Model)
4	56999	Pusher, Air Cylinder	10	26126	Capscrew (Base Mounted Model)
5	J56366	Adapter Plate	11*	25206	Adapter, Capscrew
6	27251	Air Cylinder	12*	J70633	Washer

* Not Shown

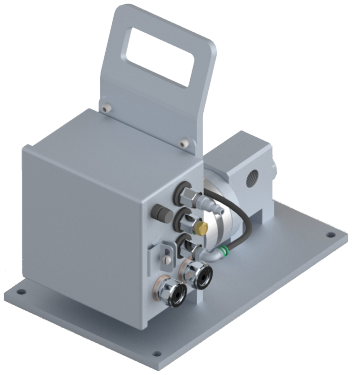

SHUT-IN STYLE DIVERTER VALVES
ELECTRIC/AIR-OPERATED

The Electric/Air-Operated Diverter Valve allows an operator to remotely control pressure in cleaning applications up to 15,000 psi, specifically in automated cleaning processes. Reduces operator fatigue by actuating the system electronically rather than mechanically.

When electric voltage is present, the valve opens to allow water to the nozzle. The valve closes when the voltage is removed, preventing the water from reaching the nozzle while maintaining system pressure.

- Use with plunger style pumps such as the UNx® requires the installation of a Shut-In Regulator Valve (see page C-18)
- Quick cartridge overhaul for easy field maintenance
- Remote operation for added operator convenience and safety
- Electric operation for reduced operator fatigue
- Valve operates at air pressures between 70-125 psi (4.8-8.6 bar) using a 1/8" NPT Female air connection

PART NO.	VOLTAGE	INLET & OUTLET CONNECTIONS*	MAXIMUM FLOW RATE		MAX. OPERATING PRESSURE		DIMENSIONS (H X W X D)		WEIGHT	
			gpm	lpm	psi	bar	in	mm	lb	kg
60650	110 VAC	1/2" NPT Female	35	132	15,000	1034	12 X 8 X 17	305 x 203 x 432	36	13

*See details on all connection types in Section I.

PUMP ACCESSORIES

15,000 PSI (1,034 BAR)

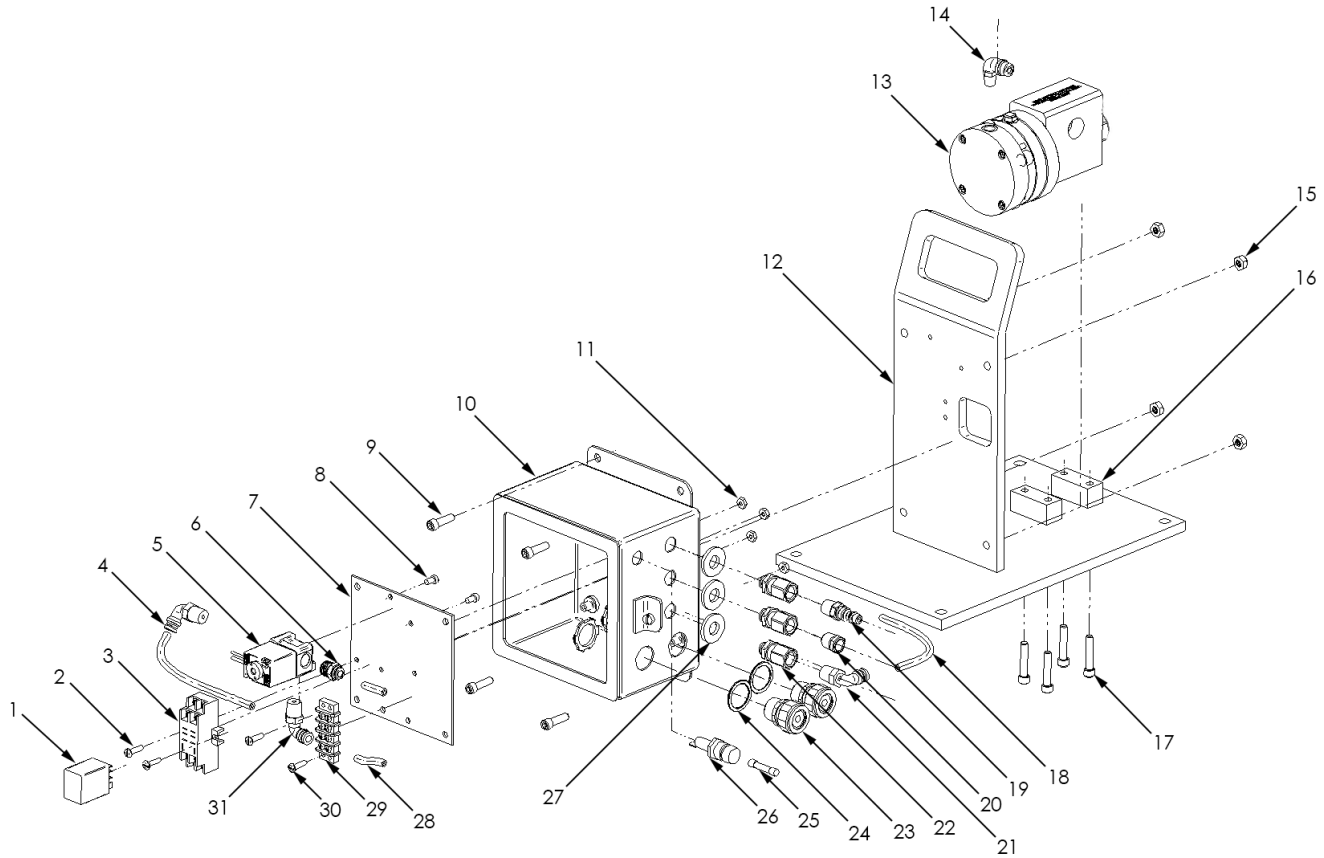

PART BREAKDOWN

ITEM	PART NO.	DESCRIPTION	ITEM	PART NO.	DESCRIPTION
1	27631	Relay	17	26126	Capscrew
2	58864	Capscrew	18	27740	Plastic Tubing
3	29158	Relay Socket	19	28223	Nipple, Q.D.
4	27740	Plastic Tubing	20	28364	Muffler
5	65002	Valve, 3 Way	21	28367	Elbow
6	52756	Adapter	22	65011	Bulkhead Fitting
7	58868	Mounting Panel	23	64998	Gland
8	27380	Capscrew	24	64999	Washer
9	58865	Capscrew	25	27348	Fuse
10	58867	Electrical Box	26	25644	Fuse Holder
11	29799	Nut	27	65012	Washer
12	53203	Mounting Base	28	27740	Plastic Tubing
13	53680	Air-Operated Valve	29	27347	Block, Terminal
14	28367	Elbow	30	58864	Capscrew
15	26711	Nut	31	28367	Elbow
16	53203	Mounting Base			

BASE-MOUNTED
Part No. 52680

BYPASS VALVES
HAND ADJUSTABLE

A bypass valve diverts a portion of pump flow to a low-pressure outlet and is used on diesel and electric units. For diesel engines, it is used to prevent bogging the engine when using flows at the low end of the pump's capability. A bypass valve is required on non-VFD electric units due to the non-adjustability of motor speed.

- Two minute field-replaceable cartridge design for minimal downtime
- Hand adjustment—no wrench needed
- Pump-mount model connects to fluid end manifold
- Base-mount model connects in-line downstream and includes a protective cage and a pressure gauge for remote adjustment
- All pressure-bearing components precision machined stainless steel
- Pipe threaded (NPT) inlet and outlet connections

PUMP-MOUNTED
Part No. 53920
Part No. 57197

REPLACEMENT CARTRIDGE

Part No. 50234

PART NO.	MOUNTING STYLE	PRESSURE GAUGE INCLUDED	INLET & OUTLET CONNECTIONS*	LOW PRESSURE OUTLET CONNECTION	DIMENSIONS (H X W X D)		WEIGHT		MAX. OPERATING PRESSURE	
					in	mm	lb	kg	psi	bar
53920	Pump	No	1/2″ NPT Female	1/2″ NPT Female	3.2 x 3.3 x 7.9	80 x 84 x 200	11	5	15,000	1034
52680	Base	Yes	1/2″ NPT Female	1/2″ NPT Female	12.8 x 8.0 x 11.3	325 x 203 x 287	28	12	15,000	1034
57197**	Pump	No	1/2" NPT Female	1/2" NPT Female	3.2 x 3.3 x 7.9	80 x 84 x 200	11	5	15,000	1034

*See details on all connection types in Section I.
** Corrosion Resistant Style.

PART BREAKDOWN

ITEM	PART NO.	DESCRIPTION	ITEM	PART NO.	DESCRIPTION
1	52144	Adjuster	11	26782	O-Ring
2	25603	O-Ring	12	52201	Diffuser
3	26115	Plug	13	51771	Outlet Adapter
4	53859	Body	14	63888	Nipple
5	50795	Locking Arm	15	71496	Elbow Fitting
6	25593	Capscrew	16	70173	QD Nipple
7	51126	Gauge (Base-Mounted Model)	17	70174	QD Coupler
8	50234	Cartridge	18	27350	Hose Barb
9	26522	O-Ring	19	25700	Capscrew (Base-Mounted Model)
10	53912	Backup Ring	20	52486	Base/Cage (Base-Mounted Model)

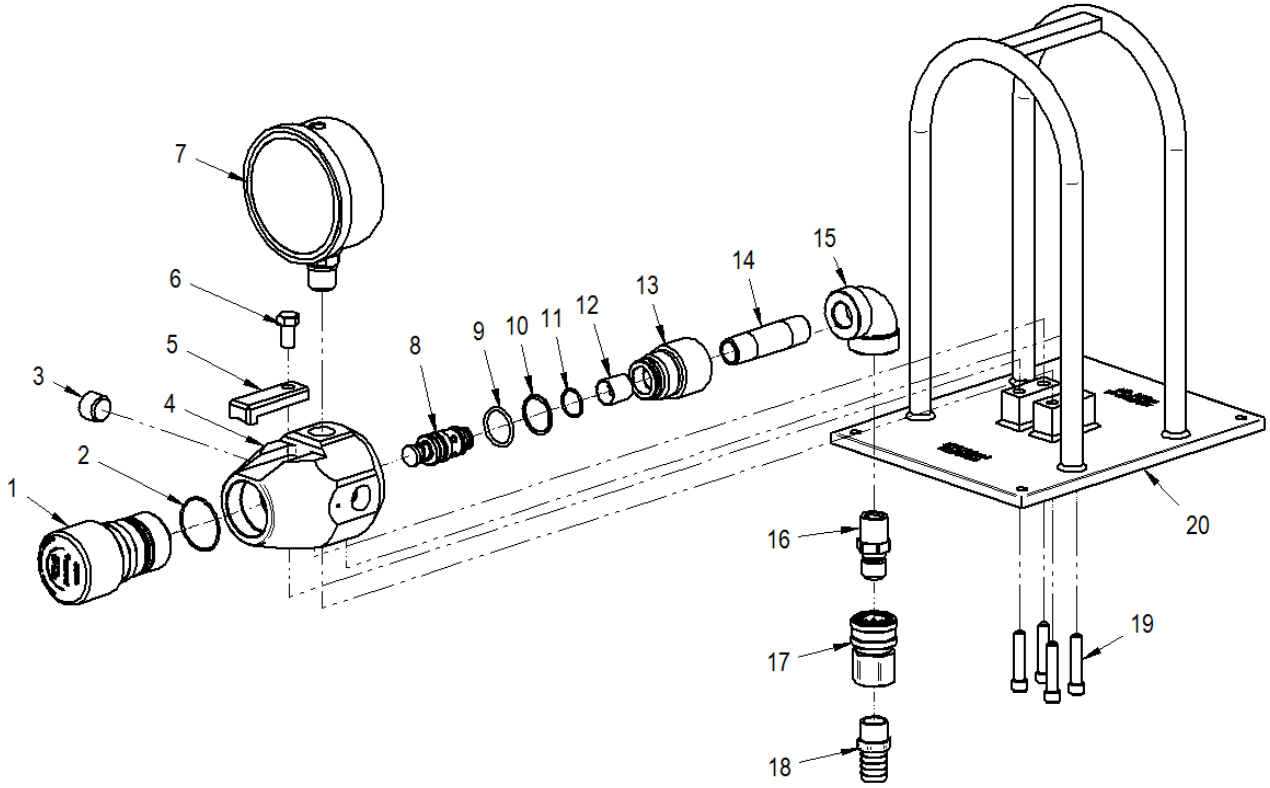

SHUT-IN REGULATOR VALVES
HAND ADJUSTABLE

Required for use with shut-in systems on plunger pumps, the regulator valve maintains constant system pressure when operating one or more shut-in guns with a single pump. When a gun is disengaged, the regulator automatically adjusts to shift the excess flow to a low pressure outlet while maintaining system pressure.

- Two-minute field-replaceable cartridge design for minimal downtime
- Hand adjustment—no wrench needed
- Pump-mount model connects to fluid end manifold
- Base-mount model connects in-line downstream and includes a protective cage and a pressure gauge for remote adjustment
- All pressure-bearing components precision machined stainless steel
- Three operating pressure ranges available. Switching between ranges requires only a cartridge changeout.
- Pipe threaded (NPT) inlet and outlet connections

BASE-MOUNTED
Part No. 52690 & 53605, J55874

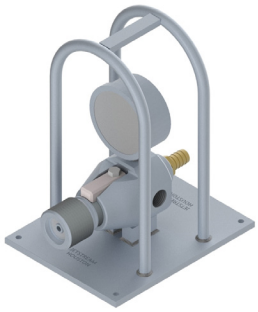

PUMP-MOUNTED
Part No. 54238, 54432, 57962

REPLACEMENT CARTRIDGE

Part No. 52695, J55878, 53135

PART NO.	MOUNTING STYLE	INLET & OUTLET CONNECTIONS*	LOW PRESSURE OUTLET CONNECTION	DIMENSIONS (H X W X D)		WEIGHT		MAX. OPERATING PRESSURE	
				in	mm	lb	kg	psi	bar
54238	Pump-Mount	3/4″ NPT Female	3/4″ NPT Female	3.2 x 3.3 x 7.9	80 x 84 x 200	11	5	10,000-15,000	550-1034
52690	Base-Mount	3/4″ NPT Female	3/4″ NPT Female	12.8 x 8.0 x 11.3	325 x 203 x 287	28	12	10,000-15,000	550-1034
54432	Pump-Mount	3/4″ NPT Female	3/4″ NPT Female	3.2 x 3.3 x 7.9	80 x 84 x 200	11	5	6,000-11,000	344-758
53605	Base-Mount	3/4″ NPT Female	3/4″ NPT Female	12.8 x 8.0 x 11.3	325 x 203 x 287	28	12	6,000-11,000	344-758
57962	Pump-Mount	3/4″ NPT Female	3/4″ NPT Female	3.2 x 3.3 x 7.9	80 x 84 x 200	11	5	2,000-6,000	137-413
J55874	Base-Mount	3/4″ NPT Female	3/4″ NPT Female	12.8 x 8.0 x 11.3	325 x 203 x 287	28	12	2,000-6,000	137-413

*See details on all connection types in Section I.

PART BREAKDOWN (BASE MOUNTED MODELS)

ITEM	PART NO.	DESCRIPTION
1	52700	Adjustment Knob
2	26919	O-Ring
3	52572	Body
4	50795	Locking Arm
5	25593	Capscrew
6	50562	Gauge (0-10,000 psi scale)
	25771	Gauge (0-20,000 psi scale)
	51126	Gauge (0-30,000 psi scale)
7	J55878	Cartridge, 2,000-6,000 psi
	53135	Cartridge, 6,000-11,000 psi
	52695	Cartridge, 10,000-15,000 psi
8	25657	O-Ring
9	52583	Outlet Adapter
10	25796	Hose Barb
11	25700	Capscrew
12	52486	Base

USE FOR MODELS: 52690, 53605, J55874

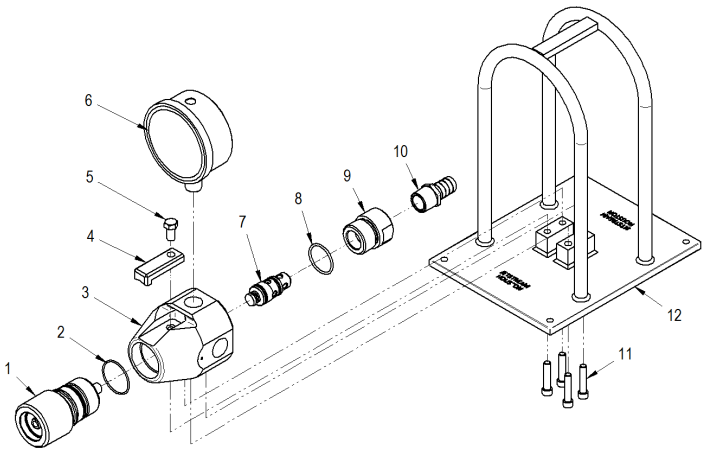

PART BREAKDOWN (PUMP MOUNTED MODELS)

ITEM	PART NO.	DESCRIPTION
1	52700	Adjuster
2	52572	Body
3	26065	Bushing
4	50795	Locking Arm
5	25593	Capscrew
6	26115	Plug
7	51702	Straight Fitting
8	J55878	Cartridge, 2,000-6,000 psi
	53135	Cartridge, 6,000-11,000 psi
	52695	Cartridge, 10,000-15,00 psi
9	25657	O-Ring
10	52583	Outlet Adapter
11	27989	Elbow Fitting
12	25796	Hose Barb
13	25807	Hose Clamp
14	25932	Hose
15	25807	Hose Clamp
16	25796	Hose Barb
17	27947	Tee

USE FOR MODELS: 54238, 54432, 57962

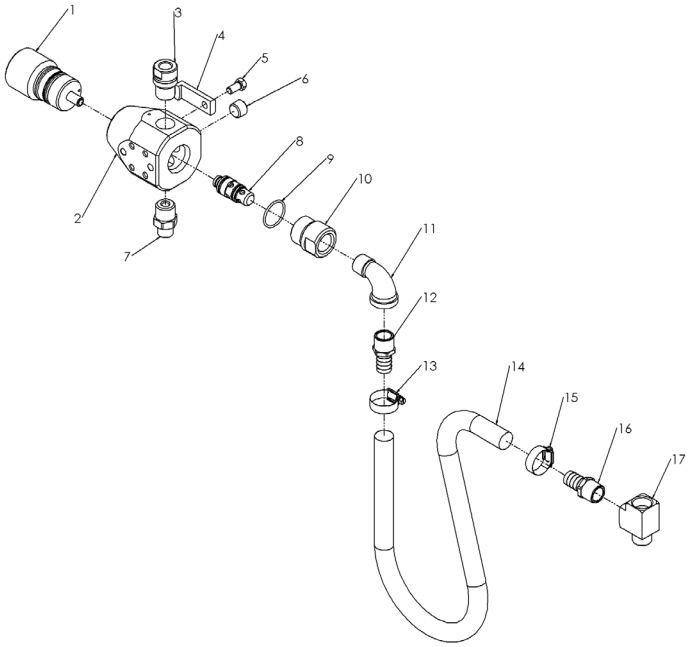

SHUT-IN REGULATOR VALVES
AIR-OPERATED

Regulator valves maintain a constant pressure when operating one or more shut-in style tools from a single bareshaft pump. The regulator automatically adjusts the excess flow to a lower pressure outlet to maintain the overall system constant pressure.

- Remote manifold mounting
- Pressure-bearing components stainless steel
- Six inlet ports available with various types of inlet and outlet connections. See page E-16 for HF adapter inlet options.
- Air compressor (**Part No. 63285**), shown on page C-21, available for air supply

PART NO.	MOUNTING STYLE	INLET & OUTLET CONNECTIONS*	LOW PRESSURE OUTLET CONNECTION	DIMENSIONS (H X W X D)		WEIGHT		MAX. OPERATING PRESSURE	
				in	mm	lb	kg	psi	bar
63064	Pump-Mount	HF	1″ NPT Female	3.2 x 3.3 x 7.9	80 x 84 x 200	11	5	8,000-15,000	550-1034

*See details on all connection types in Section I.

PART BREAKDOWN

ITEM	PART NO.	DESCRIPTION	ITEM	PART NO.	DESCRIPTION
1	26147	Plug	16	63081	Washer, Seal
2	63089	Adapter Assembly, 15K	17	63087	Adapter
3	62838	Manifold, Regulator, 15K	18	26147	Plug
4	60952	Adapter Assembly	19	63079	Adapter
5	60955	Adapter Assembly, Clockable	20	08282	Tee, 1-1/2"
6	51126	30K Pressure Gauge	21	71321	Plug
7	59149	Washer	22	63070	QD Coupler
8	26435	Capscrew	23	63069	QD Nipple
9	26558	Washer, Lock	24	28611	Reducing Bushing
10	26361	Capscrew	25	29904	Nylok Nut
11	63076-008	Bracket, Remote Manifold	26	26556	Washer
12	62966	Regulator Valve, Pneumatic	27	29904	Nylok Nut
13	62835	Plug	28	59149	Washer
14	62903	Washer	29	26147	Plug
15	62838	Manifold, Regulator, 15K	30	63089	Adapter Assembly, 15K

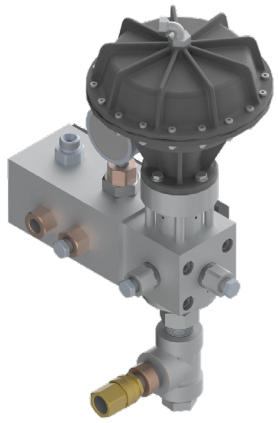

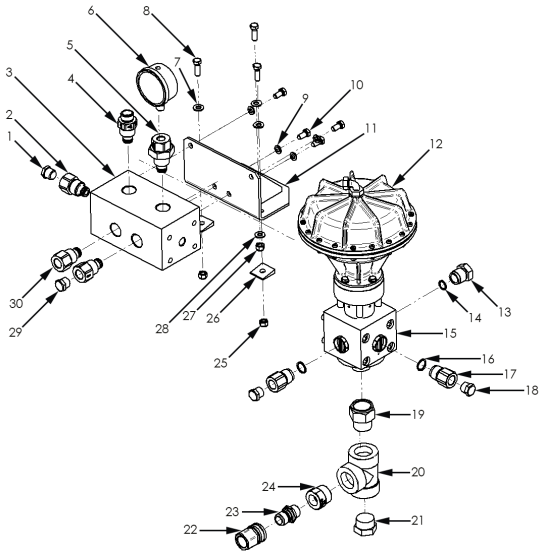

AIR COMPRESSOR

The compact, DC electric air compressor provides a low volume of compressed air at up to 110 PSI. This compressor was designed for use on diverter valves, pneumatic clutches, or high pressure regulators. The weatherproof, industrial grade compressor is mounted in a sturdy powder-coated steel enclosure to survive in any environment. An optional control panel with a regulator (**Part No. 63284**) is available to provide filtration and control of the air pressure.

Part Nos: 63285 (12 VDC)
66317 (24 VDC)

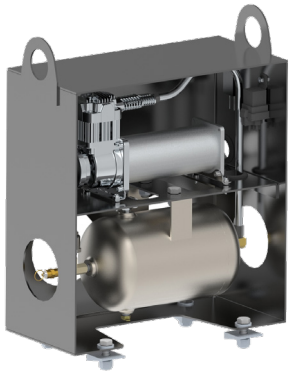

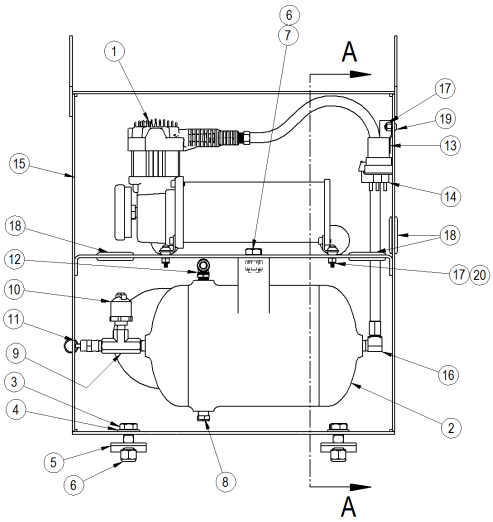

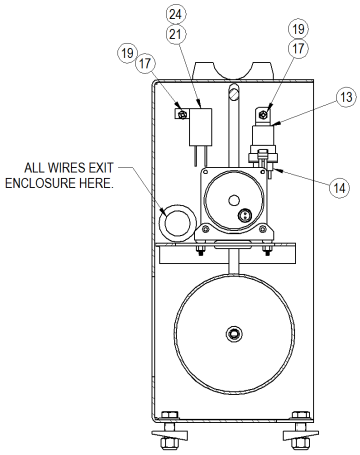

SECTION A-A

REGULATOR WITH CONTROL PANEL PART NO. 63284*

*Wiring harness for 600 HP units (Part No. 63316) not shown.

PART BREAKDOWN (PART NOS. 63285 & 66317)

ITEM	PART NO.	DESCRIPTION	ITEM	PART NO.	DESCRIPTION
1	63128	Air Compressor, 12V	13	61075	Relay, 12 VDC
	65904	Air Compressor, 24V		66329	Relay, 24 VDC
2	63292	Air Compressor Tank, 1 gallon	14	63310	Socket, Relay
3	26435	Capscrew	15	66315-008	Mounting Box
4	59149	Washer	16	26571	Elbow
5	26556	Washer	17	63282	Loc Nut
6	29904	Nylok Nut	18	J70832	Grommet
7	26361	Capscrew	19	71066	Capscrew
8	63295	Drain Valve	20	27495	Capscrew
9	63294	Tee, 1/4" NPT	21	66322	Fuseholder, Inline
10	63293	Pressure Switch	22	28056	Butt Connector
11	63296	Relief Valve	23	66328	Fuse, 15 amp
12	63299	90° Adapter, 1/4" NPT	24*	63316	Wiring Harness (600 HP units only)
			25*	29369	Adapter, 1/4" NPT

*Not shown.

ELECTRONIC HYDRO-THROTTLE
THROTTLE CONTROLS (FOR DUMP SYSTEMS)

The Jetstream hydro-throttle enables the operator to reduce the engine to idle speed and relieve the system of high pressure when the dump gun trigger (or foot pedal) is released—saving water and fuel, while reducing wear on the engine and pump.

- Electronic hydro-throttle assembly is standard on current models and includes the actuator assembly, cartridge, and electrical plug to connect to the engine control panel
- Replaceable cartridge for fast field service or conversion to another pressure range

TYPE	PART NO.	LENGTH (LESS CORD)		MANIFOLD CONNECTION	DIAMETER		WEIGHT		MAX. OPERATING PRESSURE	
		in	mm		in	mm	lbs	kg	psi	bar
4200	J56371	7.2	182	3/4" NPT	1.75	44.4	1.6	.72	15,000	1034
3000	57902			1/2" NPT						

REPLACEMENT CARTRIDGE

Hydro-Throttle valve utilizes a cartridge, shown above, to completely rebuild the dump valve in about 30 seconds.
Part No. 51899

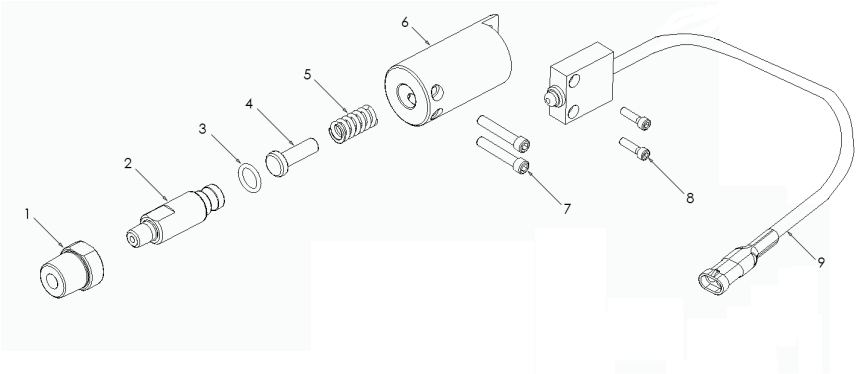

PART BREAKDOWN

ITEM	PART NO.	DESCRIPTION	ITEM	PART NO.	DESCRIPTION
1	26069	Reducer Bushing, 4200	6	53443	Body
	25904	Reducer Bushing, 3000	7	27680	Capscrew
2	51899	Cartridge	8	27716	Capscrew
3	26426	O-Ring	9	57970	Switch Assy (after 9/2008)
4	53444	Plunger		56551	Switch Assy (2007 - 9/2008)
5	25279	Spring		53446	Switch Assy (before 2007)

MECHANICAL HYDRO-THROTTLE
THROTTLE CONTROLS (FOR DUMP SYSTEMS)

The Jetstream hydro-throttle enables the operator to reduce the engine to idle speed and relieve the system of high pressure when the dump gun trigger (or foot pedal) is released—saving water and fuel, while reducing wear on the engine and pump.

- Mechanical hydro-throttle parts can be purchased and include the control unit, cartridge and control cable
- Replaceable cartridge for fast field service or conversion to another pressure range
- For use on Tier I Mechanical engines only
- Requires high pressure hose connected to fluid end

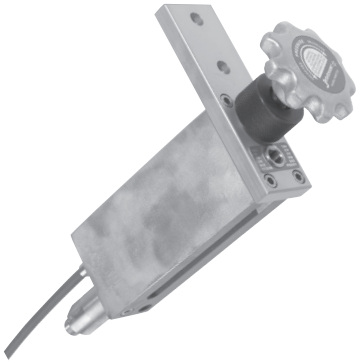

MECHANICAL

TYPE	PART NO.	CONTROL CABLE LENGTH		HOSE CONNECTION THREAD	CONTROL UNIT SIZE (L x W x H)		WEIGHT		MAX. OPERATING PRESSURE	
		ft	m		in	mm	lbs	kg	psi	bar
MECHANICAL	51900	2	0.6	1/4" NPT Male	11.7 x 1.75 x 5.6	297 x 44.5 x 142	4	1.8	15,000	1034
	51900A	5	1.5							

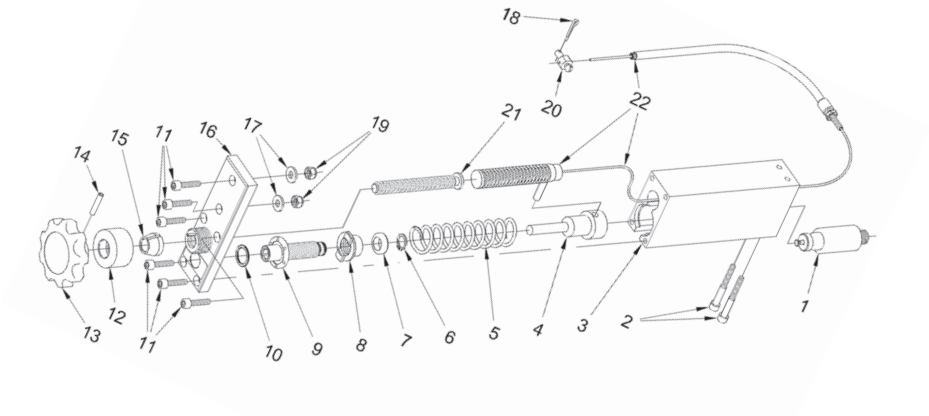

REPLACEMENT CARTRIDGE

Hydro-Throttle valve utilizes a cartridge, shown above, to completely rebuild the dump valve in about 30 seconds.
Part No. 51899

PART BREAKDOWN

ITEM	PART NO.	DESCRIPTION	ITEM	PART NO.	DESCRIPTION
1	51899	Cartridge	12	51887	Friction Adjust. Nut
2-21	52894	Throttle Control Unit	13	51879	Hand Knob
2	26690	Capscrew	14	26688	Pin
3	51877	Body	15	51888	Friction Ring
4	54293	Spring Retainer	16	51908	Face Plate
5	26682	Return Spring	17	25247	Washer
6	28274	Retaining Spring	18	26468	Cotter Pin
7	54272	Adjuster Stop Ring	19	25314	Nut
8	54269	Pressure Adjust. Nut	20	26728	Pivot Terminal
9	51885	Pressure Adjust. Screw	21	54268	Adjustment Screw
10	54271	Thrust Washer	22	51903	2' (0.6m) Ctrl Cable
11	26689	Capscrew		51903A	5' (1.5m) Ctrl Cable

REPLACEMENT PARTS

51903 Control Cable, 2 ft. solid wire
51903A Control Cable, 5 ft. braided wire

53371 6' (1.8m) Hydro-Throttle Hose, 1/2" NPT Male x 1/4" NPT Female

MULTI-GUN VALVE (MGV)

The MGV (Multi-Gun Valve) allows two dump style waterblast guns to be operated independently when connected to one waterblast pump. The MGV will divide the pump's total flow between the guns and will maintain system pressure when either or both guns are dumping.

- Setup using two hand adjustment dials is fast and simple
- Utilizes two valve cartridges that can be easily replaced to completely repair the valve in the field in only three minutes
- All pressure-bearing components are stainless steel
- Zinc-plated base for corrosion resistance
- Pipe threaded (NPT) inlet and outlet connections
- Additional Multi-Gun Valves can be added to a system to further increase the number of tools in operation by a single waterblast unit

PART NO.	INLET & THROUGH CONNECTIONS*	GUN CONNECTION*	MAXIMUM FLOW		DIMENSIONS (H X W X D)		WEIGHT		MAX. OPERATING PRESSURE	
			gpm	lpm	in	mm	lb	kg	psi	bar
51785	3/4" NPT Female	1/2˝ NPT Female	35	132	4.3 x 8.0 x 10.8	109 x 203 x 275	29	13	15,000	1034

*See details on all connection types in Section I. Inlet and Outlet (Gauge) connections can be reversed.

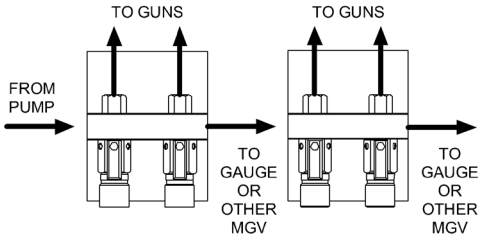

MULTIPLE MGV CONFIGURATIONS

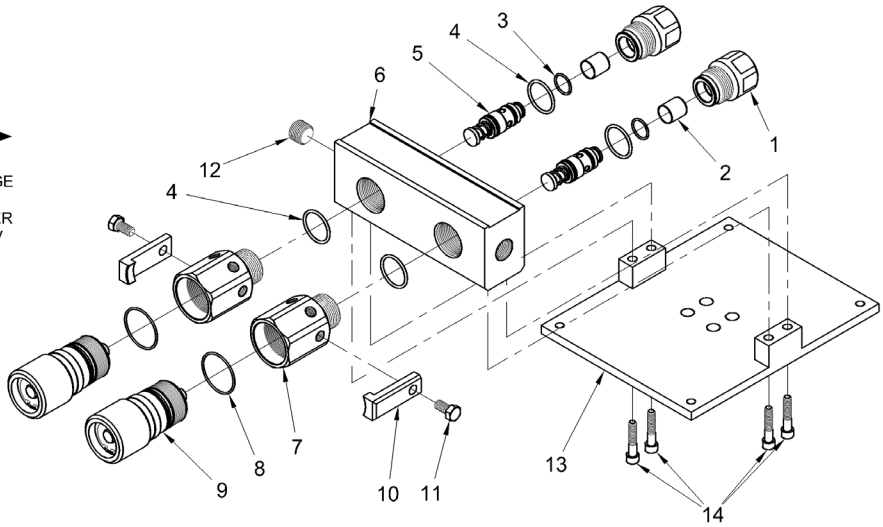

PART BREAKDOWN

ITEM	PART NO.	DESCRIPTION	ITEM	PART NO.	DESCRIPTION
1	59047	Outlet Adapter	8	25603	O-Ring
2	52201	Diffuser	9	50900	Adjuster
3	26782	O-Ring	10	50795	Locking Arm
4	26509	O-Ring	11	25593	Capscrew
5	50234	Cartridge	12	26164	3/4˝ NPT Plug
6	51767	Manifold	13	50811	Base
7	51769	Adjuster Adapter	14	25700	Capscrew

REPLACEMENT CARTRIDGE

Part No. 50234

15,000 PSI HIGH FLOW MODEL
Part No. 55330

15,000 PSI MODEL
Part No. 52840

MULTI-UNIT MANIFOLDS (MUM)

- Combine flow of two waterblast units
- Two sizes available
- Built-in bypass valve and pressure gauge for centralized, remote pressure control
- All pressure-bearing components are stainless steel
- Zinc-plated base for corrosion resistance
- Pipe threaded (NPT) inlet and outlet connections

PART NO.	INLET CONNECTIONS*	OUTLET CONNECTIONS*	MAXIMUM FLOW		DIMENSIONS (H X W X D)		WEIGHT		MAX. OPERATING PRESSURE	
			gpm	lpm	in	mm	lb	kg	psi	bar
55330	1" NPT Female	1" NPT Female	200	757	14 x 8 x 10	355 x 203.2 x 254	30	13.6	15,000	1034
52840	1/2" NPT Female	3/4" NPT Female	100	378	4.3 x 8 x 10.8	109 x 203.2 x 274.3	27	12.2	15,000	1034

* See details on all connection types in Section I.

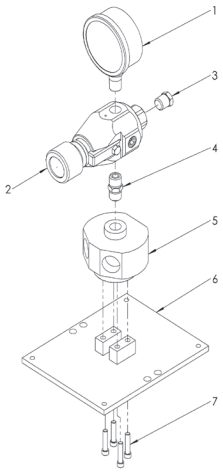

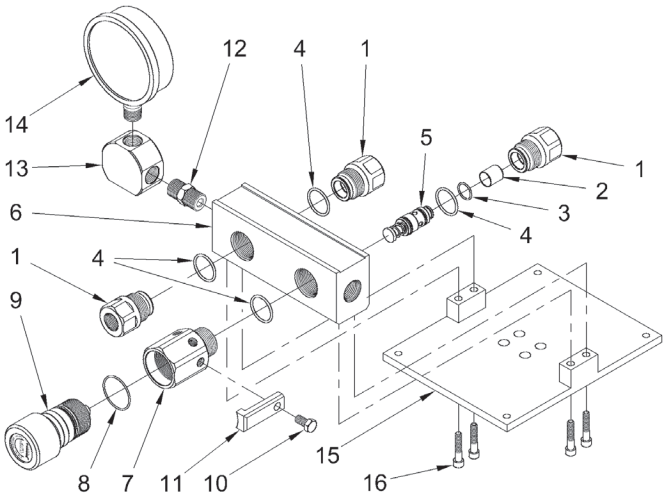

15,000 PSI HIGH FLOW MODEL PART BREAKDOWN (55330)

ITEM	PART NO.	DESCRIPTION
1	51126	Pressure Gage
2	53920	Bypass Valve
3	25174	Plug
4	50488	Hex Nipple
5	55297	Y-Fitting, 1"
6	55304	Base
7	25700	Capscrew

15,000 PSI MODEL PART BREAKDOWN (52840)

ITEM	PART NO.	DESCRIPTION	ITEM	PART NO.	DESCRIPTION
1	54077	Outlet Adapter	9	52144	Adjuster
2	52201	Diffuser	10	25593	Capscrew
3	26782	O-Ring	11	50795	Locking Arm
4	26509	O-Ring	12	50496	Nipple
5	50234	Cartridge	13	50300	Elbow
6	51767	Manifold	14	51126	Gauge (0-30,000 psi)
7	51769	Adjuster Adapter	15	50811	Base
8	25603	O-Ring	16	25700	Capscrew

NOZZLE SHUT-OFF VALVE
(NSOV)

The Nozzle Shut-Off Valve (NSOV) is designed for use with dump style foot guns. The Nozzle Shut Off Valve completely stops all water flow to the cleaning nozzle in a waterblast operation while the foot valve is in its dump mode.

- Allows the operator to freely move the nozzle without impairment of vision caused by sprayback (shown below)
- Opens fully for unimpeded flow to the nozzle when blasting
- Mounts between lance and foot gun
- All pressure-bearing components precision machined stainless steel

PART NO.	INLET CONNECTIONS*	OUTLET CONNECTIONS*	DIMENSIONS (H X W X D)		WEIGHT		MAX. OPERATING PRESSURE	
			in	mm	lb	kg	psi	bar
63144	1/2" NPT Male	1/2" NPT Female	5.15 x 2.25	130.81 x 57.15	3	1.4	15,000	1034

*See details on all connection types in Section I.

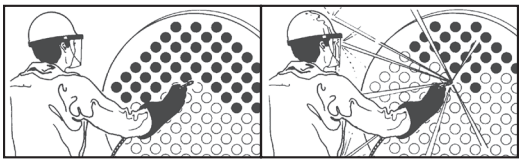

With NSOV installed Without NSOV installed

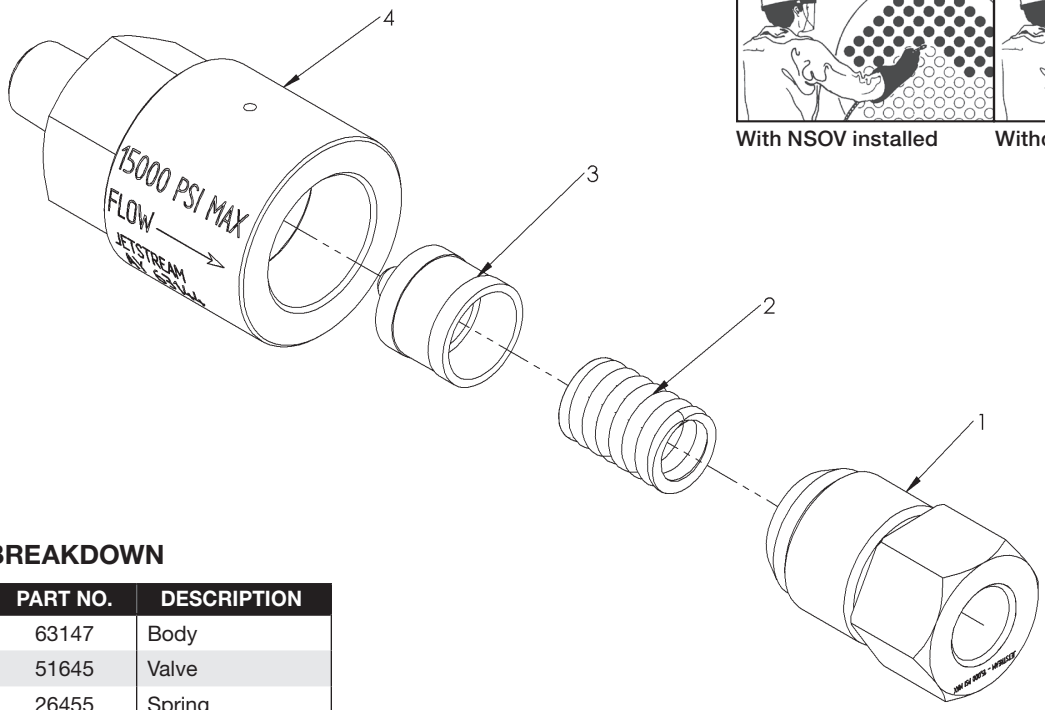

PART BREAKDOWN

ITEM	PART NO.	DESCRIPTION
1	63147	Body
2	51645	Valve
3	26455	Spring
4	63148	Connector

STANDARD FILTERS

Available for a range of flows to meet all needs, Jetstream filters provide the necessary protection to any waterblast system.

GUARDIAN SYSTEM
Part No. 58368

Part No. 70968

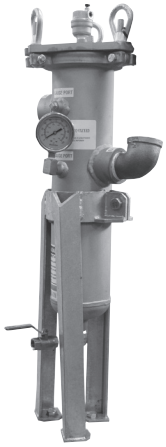

Part No. 61607

Part No. 60740

PART NO.	INLET/OUTLET DRAIN CONNECTIONS	MAX. FLOW RATE		DIMENSIONS				WEIGHT		MAX. OPERATING PRESSURE	
				DIAMETER		HEIGHT					
		gpm	lpm	in	mm	in	mm	lb	kg	psi	bar
58368	1-1/2" / 3" / 2" NPT	-	-	18 5/16″ deep x 47 5/8″ wide x 50″ tall				185	83.9	100	6.8
61607	2″ / 2-3/4" NPT	200	750	8.63	219	41.19	1046.23	40	18	150	10
70968	3/4" / 1-1/2" NPT	40	150	4.0	102	20	510	7.5	3.4	150	10
60740*	2" NPT	200	750	8.63	219	47.18	1198.63	65	29.4	150	10

*For use with the 6000 Series Units

FILTER BAGS

FILTER STYLE	BAG DIAMETER		BAG LENGTH		NOMINAL FILTRATION BAGS (MICRON)			
	in	mm	in	mm	5 micron	10 micron**	25 micron	50 micron
58368	7	180	42	1070	71254	J56204**	J70917	-
70968	7	180	32	810	27688	26765**	26766	27497
61607	4	100	14	360	28806	26916**	25117	25866
60740*	7	180	32	810	-	62652	-	-

*For Use with the 6000 Series Units **RECOMMENDED MICRON SIZE

RELATED ITEMS

58414 Retrofit Float Assembly for non-Guardian Water Tanks

28519 Low Water Level Switch

28480MOD Float Valve Modified (plastic floats)

57888 Float Assembly - Guardian Tank

PRESSURE GAUGES

- Bottom mount
- 4″ high visibility face with laminated safety glass dial cover
- Accurate within +/-0.5% of full scale range
- Stainless steel case, fitting and internals
- Heavy-duty movement
- Glycerin-filled for protection against vibration and pulsation
- Restrictor screw provides maximum protection against pulsation
- Blow-out pressure relief plug for maximum safety
- Pointer zero adjustment

Part No. 51126

Part No. 25771

Part No. 29818

PART NO.	DIAL SIZE		MOUNTING STYLE	CONNECTION TYPE*	UNITS	SCALE	GRADUATIONS	MAX. OPERATING PRESSURE	
	in	mm						psi	bar
25771	4	100	Bottom	1/2″ NPT Male	psi	0 — 20,000 psi	200 psi	10,000	689
51126**	4	100	Bottom	1/2″ NPT Male	psi	0 — 30,000 psi	200 psi	15,000	1034
55416***	4	100	Bottom	1/2″ NPT Male	psi/bar	0 — 30,000 psi 0 — 2000 bar	500 psi 20 psi	15,000	1034
29818	4	100	Bottom	9/16″ HP Male	psi/bar	0 — 30,000 psi 0 — 2000 bar	500 psi 20 psi	15,000	1034

*See details on all connection types in Section I.
**Identical part number 61626 is certified and comes with a certificate of compliance.
***Includes adapter, gland nut and collar to adapt 9/16″ HP tube nipple.

GAUGE EXTENSION

- Raises height of gauge for unobstructed reading
- 1/2″ NPT Male x 1/2″ NPT Female
- 4-1/2″ (114 mm) lg.
- Stainless steel
- Copper-plated for galling resistance

Part No. 55176

GAUGE ADAPTER

- Connects gauge (part no. 29818) to 1/2″ NPT Female port
- 1/2″ NPT Male x 9/16″ MP female
- Small I.D. for proper seating of 9/16″ HP tube nipple
- 9/16″ MP gland nut and collar sold separately
- Stainless steel
- Copper-plated for galling resistance

Part No. 55402

RUPTURE DISC HOLDERS

For protection from dangerous over-pressurization, rupture discs function in a waterblast system analagous to the function of fuses in an electrical circuit. When the system pressure exceeds that of the burst disc, the disc bursts and allows water to flow out of the holder's cap, relieving the system of high pressure.

- May be used as primary and/or secondary relief devices
- Tamper-resistant design
- Discs are quickly and easily replaceable
- Assembly components machined from high quality stainless steel

NOTE: Burst Disc not included with assembly.

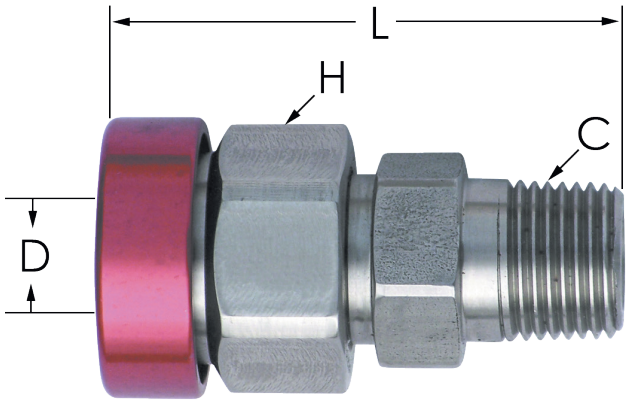

PART NO.	CONNECTION TYPE* (C)	OVERALL LENGTH (L)		DISC BLOW OUT DIAMETER (D)		FLATS (H)		MAXIMUM WORKING PRESSURE	
		in	mm	in	mm	in	mm	psi	bar
51035	1/2" NPT Male	2.7	69	.50	12.7	1.25	31.8	15,000	1034

* See details on all connection types in Section I.

BURST DISCS

DISC SELECTION

For **primary** relief devices, select disc with burst pressure of approximately **1.2 times** desired operation pressure.

Example

Operating pressure: 10,000 psi (700 bar)
Desired burst pressure: 10,000 psi x 1.2 = 12,000 psi
700 bar x 1.2 = 840 bar

Select 12,000 psi (827 bar) Burst Disc, part no. 51049

For **secondary** relief devices, select disc with burst pressure of approximately 1.4 times desired operating pressure.

Example

Operating pressure: 10,000 psi (700 bar)
Desired burst pressure: 10,000 psi x 1.4 = 14,000 psi
700 bar x 1.4 = 980 bar

Select 14,000 psi (965 bar) Burst Disc, part no. 51050

PART NO.	BURST DISC PRESSURE	
	psi	bar
53738	6,000	400
51047	8,000	550
51048	10,000	700
51049	12,000	850
51050	14,000	950
51051	16,000	1100
55316	18,000	1250
51052	20,000	1400

REPLACEMENT PARTS

ITEM	PART NO.	DESCRIPTION
1	51033	Base
2	**	Burst Disc
3	51040	Hold-Down Ring
4	51037	Cap

* See Burst Discs chart above

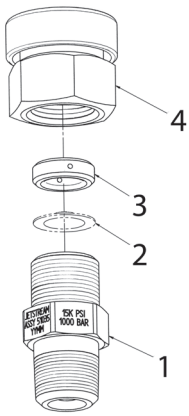

SEVERE SERVICE RELIEF VALVE

For use as a primary relief device to protect waterblast systems and operators from dangerous overpressurization, the Severe Service Relief Valve opens to safely bypass some of the system flow in circumstances where the operating pressure exceeds the factory set opening pressure of the valve.

- Designed for rigorous service and low maintenance.
- Valve constructed with carbide ball and hardened stainless steel seat for long service life.
- Precise machining and cartridge design of ball-seat valve assembly and spring assembly allows quick and simple field repair without disturbing the valve pressure setting.
- Shipped from the factory preset and tested at customer specified opening pressure.
- Factory set opening pressure is stamped into anti-tamper ring which is installed to prevent set pressure from being changed without evidence

PART NO.	CONNECTION TYPE* (C)	OVERALL LENGTH (L)		DIAMETER		MAX. OPENING PRESSURE (FACTORY SET)		MAX. WORKING PRESSURE	
		in	mm	in	mm	psi	bar	psi	bar
51470A	1/2" NPT Male	6.5	165	1.94	49.3	6,000	415	5,000	345
51470B	1/2" NPT Male	6.5	165	1.94	49.3	12,000	825	10,000	689
51470C	1/2" NPT Male	6.5	165	1.94	49.3	**18,000**	**1240**	**15,000**	**1034**
51945A	3/4" NPT Male	6.7	170	1.94	49.3	6,000	415	5,000	345
51945B	3/4" NPT Male	6.7	170	1.94	49.3	12,000	825	10,000	689
51945C	3/4" NPT Male	6.7	170	1.94	49.3	**18,000**	**1240**	**15,000**	**1034**
51460A	1" NPT Male	7.9	200	2.20	55.9	6,000	415	5,000	345
51460B	1" NPT Male	7.9	200	2.20	55.9	12,000	825	10,000	689

*See details on all connection types beginning on page I-2.

PART BREAKDOWN

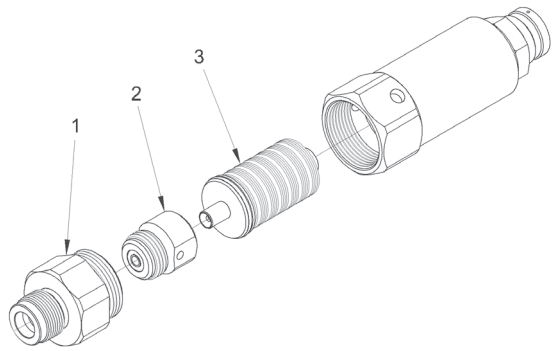

ITEM	PART NO.	DESCRIPTION
1	51452	Base, 1/2" NPT Male (51470)
	51822	Base, 3/4" NPT Male (51945)
	51441	Base, 1" NPT Male (51460)
2	51500	Ball-Seat Cartridge Assy (51470, 51945)
	51486	Ball-Seat Cartridge Assy (51460)
3	51477	Spring Cartridge Assy (51470, 51945)
	51468	Spring Cartridge Assy (51460)

HOSES & LANCES

Jetstream provides a full arrangement of hoses and flex lances for high pressure waterblasting. The hoses and lances are designed to be durable and reliable for any 15,000 psi application. A large selection of 25', 35' and 50' hoses and lances are kept in inventory, while a wide variety of lengths can be custom ordered.

All hoses and flex lances are constructed of a plastic core reinforced with high tensile steel wire and enclosed in a durable, flexible thermoplastic jacket. The smooth plastic core minimizes pressure loss and offers maximum resistance to damage caused by aging, moisture absorption and changing environmental factors. All flex lances supplied will be green for 15K rated hose, or yellow for 10K rated, from end to end. Hoses with the abrasion cover are also color-coded accordingly.

A key element of the thermoplastic supply hose is the heavy-duty abrasion cover. This cover prevents excess damage caused by vibration and movement of the hose on rough or uneven surfaces when connecting from the pump to an intermediary high pressure tool, such as a foot gun.

The flex lances are uncovered lances used for the cleaning of small diameter tubes found in heat exchangers, condensers and boilers. The use of smaller flex lances allows for easy passage through bends due to great flexibility and small minimum bend radius.

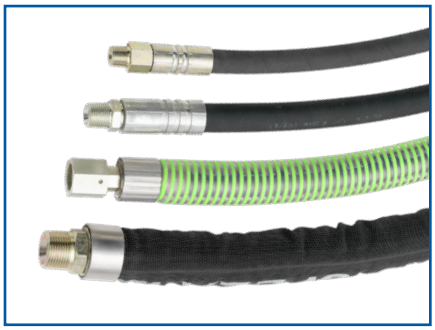
Rubber Hoses

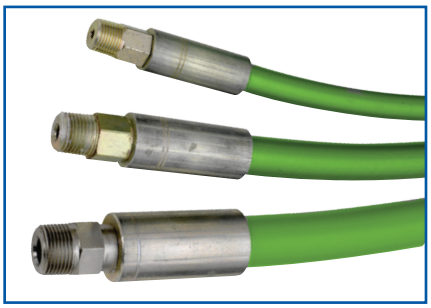
Thermoplastic Hoses & Flex Lances

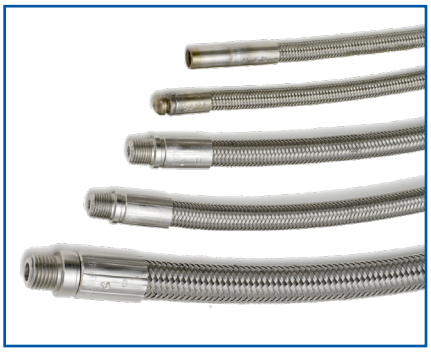
SS Braided Flex Lances

Rigid Lances

HOW TO ORDER JETSTREAM HOSES & FLEX LANCES
26108-AAABBCCX

1. **Specify Series Number**
   Insert dash after Series Number.
   Specify desired Length in Feet (000 – 999)
   Example: 050 for a 50 ft. long hose.
   26108

2. **Specify End Fitting Codes (BB & CC)**
   AAA

3. For a hose or lance requiring two different end fittings, list the codes in numerical order when creating the part number.
   BB CC

4. **Specify Cover Options Code (X)**
   Leave blank if no cover is desired.
   Cover Option Codes:
   - **1** Abrasion Cover Guard
   - **2** Burst Shield Guard
   - **4** Cordura Cover Guard
   X

RUBBER WATERBLAST HOSES

These high pressure hose assemblies combine rugged construction, dependability and safe performance.

- Designed specifically for waterblast applications
- Lightweight and flexible
- Available in sizes from 1/4" to 1" (6 mm to 25 mm)
- Standard hoses are uncovered with plated steel male pipe thread end fittings in lengths of 25 or 50 ft
- For other lengths, fittings or cover options, use the custom order instructions on page D-3
- See pages D-16–D-18 for pressure drop charts

NOMINAL HOSE I.D.		PART NO.	END FITTINGS CONNECTIONS*	LENGTH		WORKING PRESSURE**		MIN. BURST PRESSURE**		BEND RADIUS	
in	mm			ft	m	psi	bar	psi	bar	in	mm
1	25	53235-0500707	1" NPT Male	50	15.2	10,000	689	25,000	1723	13.4	340
		53235-0250707	1" NPT Male	25	7.6	10,000	689	25,000	1723	13.4	340
3/4	20	51118-0500606	3/4" NPT Male	50	15.2	14,500	1000	25,000	1723	10.0	254
		51118-0250606	3/4" NPT Male	25	7.6	14,500	1000	25,000	1723	10.0	254
1/2"	13	52241-0500505	1/2" NPT Male	50	15.2	15,000	1034	37,500	2585	9.0	228
		52241-0250505	1/2" NPT Male	25	7.6	15,000	1034	37,500	2585	9.0	228
		25513-0500505	1/2" NPT Male	50	15.2	10,000	689	25,000	1723	8.7	220
		25513-0250505	1/2" NPT Male	25	7.6	10,000	689	25,000	1723	8.7	220
3/8	8	52178-0500404	3/8" NPT Male	50	15.2	15,000	1034	37,500	2585	9.0	228
		52178-0250404	3/8" NPT Male	25	7.6	15,000	1034	37,500	2585	9.0	228
		25576-0500404	3/8" NPT Male	50	15.2	10,000	689	25,000	1723	7.0	177
		25576-0250404	3/8" NPT Male	25	7.6	10,000	689	25,000	1723	7.0	177
1/4"	6	25914-0500303	1/4" NPT Male	50	15.2	10,000	689	25,000	1723	5.9	149
		25914-0250303	1/4" NPT Male	25	7.6	10,000	689	25,000	1723	5.9	149

* See details on all connection types in Section I.
** Maximum working pressure and minimum burst pressure may be greater than specified.

RUBBER WATERBLAST HOSES
CUSTOM ORDER

Use the information on this page to build part numbers for custom rubber hoses using the part numbering system described on the previous page.

Abrasion Cover Guard (Code: 1)
Constructed of clear PVC and reinforced with a rigid spiral coil, the Abrasion Cover protects the hose from external damage caused by vibration or movement along rough or uneven surfaces.

Burst Shield Guard (Code: 2)
Constructed of steel wire reinforced heavy-duty synthetic rubber. Helps to protect the user and/or surrounding areas from hose failures.

Cordura Cover Guard (Code: 4)
Heavy-duty, braided nylon cover protects hose from abrasion damage caused by vibration or movement along a rough surface.

HOSE COVER OPTIONS

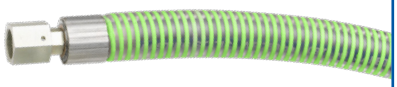

Abrasion Cover Guard

Burst Shield Guard

Cordura Cover Guard

HOSE SERIES

NOMINAL HOSE I.D.		SERIES	MAX. WORKING PRESSURE*		MIN. BURST PRESSURE*		BEND RADIUS		WEIGHT	
in	mm		psi	bar	psi	bar	in	mm	lb/ft	kg/m
1"	25	53235	10,000	689	25,000	1723	13.4	340	1.94	2.88
3/4"	20	51118	14,500	1000	25,000	1723	10.0	254	1.16	1.72
1/2"	13	52241	15,000	1034	37,500	2585	9.0	228	.76	1.13
1/2"	13	25513	10,000	689	25,000	1723	8.7	220	.61	0.90
3/8"	8	25576	10,000	689	25,000	1723	7.0	177	.50	0.74
3/8"	8	52178	15,000	1034	37,500	2585	9.0	228	.55	0.81
1/4"	6	25914	10,000	689	25,000	1723	5.9	149	.40	0.59

* Maximum working pressure and minimum burst pressure may be greater than specified.

END FITTINGS MALE PIPE THREADS (NPT MALE)

NOMINAL HOSE I.D.		END FITTING CONNECTION*	FITTING CODE**	
in	mm		SS	PS
1"	25	1" NPT Male	14	07
3/4"	20	3/4" NPT Male	13	06
1/2"	12	1/2" NPT Male	12	05
3/8"	9	3/8" NPT Male	11	04
1/4"	6	1/4" NPT Male	10	03

*See details on all connection types in Section I. **SS: Stainless steel; PS: Plated carbon steel

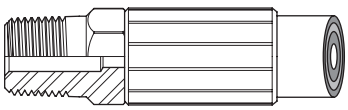

Male Pipe Threads

END FITTINGS METRIC FEMALE

NOMINAL HOSE I.D.		END FITTING CONNECTION*	FITTING CODE**	
in	mm		SS	PS
1"	25	M42 x 2.0 Female	-	48
3/4"	20	M36 x 2.0 Female	-	47
1/2"	12	M24 x 1.5 Female	-	46
3/8"	9	M22 x 1.5 Female	-	45

*See details on all connection types in Section I. **SS: Stainless steel; PS: Plated carbon steel

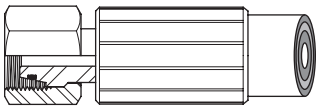

Metric Female

THERMOPLASTIC HOSES

These premium hoses provide the most durable and reliable means of connecting system components.

- Constructed of plastic core reinforced with high tensile steel wire and enclosed in a tough, flexible thermoplastic jacket
- Smooth core minimizes pressure loss and offers the maximum resistance to damage caused by aging, moisture absorption and changing environmental factors
- Available with plated or stainless steel end fittings
- Heavy-duty vinyl abrasion cover prevents damage caused by vibration and movement of hose on rough or uneven surfaces
- See pages D-18–D-20 for pressure drop graphs
- For special lengths, end fittings, or cover options, see custom order instructions on pages D-6–D-8

STANDARD ASSEMBLIES

NOMINAL HOSE I.D.		PART NO.	END FITTINGS		LENGTH		INSIDE DIAMETER		WORKING PRESSURE**		MINIMUM BURST PRESSURE**		BEND RADIUS	
in	mm		CONNECTION*	MATERIAL	ft	mm	in	mm	psi	bar	psi	bar	in	mm
3/4"	20	29313-0500606	3/4" NPT Male	Plated Steel	50	15.2	.74	18.7	10,000	689	37,500	2585	9.8	248
		29313-0250606	3/4" NPT Male	Plated Steel	25	7.6	.74	18.7	10,000	689	37,500	2585	9.8	248
		29313-0501313	3/4" NPT Male	Stainless Steel	50	15.2	.74	18.7	10,000	689	37,500	2585	9.8	248
		29313-0251313	3/4" NPT Male	Stainless Steel	25	7.6	.74	18.7	10,000	689	37,500	2585	9.8	248
1/2"	13	28524-0500505	1/2" NPT Male	Plated Steel	50	15.2	.50	12.7	15,000	1034	37,500	2585	5.6	142
		28524-0250505	1/2" NPT Male	Plated Steel	25	7.6	.50	12.7	15,000	1034	37,500	2585	5.6	142
		28524-0501212	1/2" NPT Male	Stainless Steel	50	15.2	.50	12.7	15,000	1034	37,500	2585	5.6	142
		28524-0251212	1/2" NPT Male	Stainless Steel	25	7.6	.50	12.7	15,000	1034	37,500	2585	5.6	142
5/16"	8	28673-0500404	3/8" NPT Male	Plated Steel	50	15.2	.32	8.1	15,000	1034	37,500	2585	4.3	109
		28673-0250404	3/8" NPT Male	Plated Steel	25	7.6	.32	8.1	15,000	1034	37,500	2585	4.3	109
1/4"	6	28490-0500303	1/4" NPT Male	Plated Steel	50	15.2	.25	6.3	15,000	1034	37,500	2585	4.3	109
		28490-0250303	1/4" NPT Male	Plated Steel	25	7.6	.25	6.3	15,000	1034	37,500	2585	4.3	109

* See details on all connection types in Section I.
** Maximum working pressure and minimum burst pressure may be greater than specified.

THERMOPLASTIC FLEX LANCES

Flex lances are uncovered hoses used for the cleaning of small diameter tubes such as those found in heat exchangers, condensers and boilers.

- Small minimum bend radius allows easy passage through bends
- Constructed of plastic core reinforced with high tensile steel wire and enclosed in a tough, flexible thermoplastic jacket
- Smooth plastic core minimizes pressure loss and offers the maximum resistance to damage caused by aging, moisture absorption and changing environmental factors
- Standard flex lances include plated steel end fittings. Stainless steel fittings available upon request. See pages D-7–D-8.
- See pages D-18–D-20 for pressure drop graphs
- Standard lengths are 25, 35 and 50 feet. Other lengths or end fitting combinations can be ordered using the instructions on pages D-6–D-8.

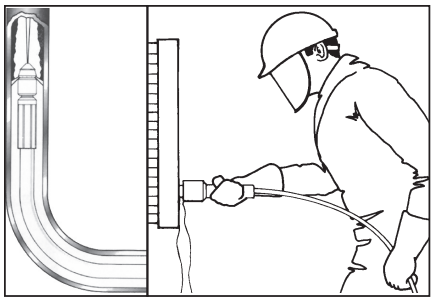

STANDARD ASSEMBLIES

NOMINAL HOSE I.D.		PART NO.	END FITTINGS*		INSIDE DIAMETER		LENGTH		END FITTING DIAMETER**		MAX. OPERATING PRESSURE***		BEND RADIUS	
in	mm		CONNECTION	MATERIAL	in	mm	ft	mm	in	mm	psi	bar	in	mm
5/16"	8	27560-0500404	3/8" NPT Male	Plated Steel	.32	8.1	50	15.2	.86	21.8	10,000	689	5.1	129
		27560-0350404	3/8" NPT Male	Plated Steel	.32	8.1	35	10.7	.86	21.8	10,000	689	5.1	129
		27560-0250404	3/8" NPT Male	Plated Steel	.32	8.1	25	7.6	.86	21.8	10,000	689	5.1	129
		28673-0500404	3/8" NPT Male	Plated Steel	.32	8.1	50	15.2	.86	21.8	15,000	1034	4.3	109
		28673-0350404	3/8" NPT Male	Plated Steel	.32	8.1	35	10.7	.86	21.8	15,000	1034	4.3	109
		28673-0250404	3/8" NPT Male	Plated Steel	.32	8.1	25	7.6	.86	21.8	15,000	1034	4.3	109
1/4"	6	26108-0500303	1/4" NPT Male	Plated Steel	.25	6.3	50	15.2	.53	13.4	15,000	1034	4.3	109
		26108-0350303	1/4" NPT Male	Plated Steel	.25	6.3	35	10.7	.53	13.4	15,000	1034	4.3	109
		26108-0250303	1/4" NPT Male	Plated Steel	.25	6.3	25	7.6	.53	13.4	15,000	1034	4.3	109
3/16"	5	26106-0500202	1/8" NPT Male	Plated Steel	.20	5.0	50	15.2	.47	11.9	15,000	1034	3.8	96
		26106-0350202	1/8" NPT Male	Plated Steel	.20	5.0	35	10.7	.47	11.9	15,000	1034	3.8	96
		26106-0250202	1/8" NPT Male	Plated Steel	.20	5.0	25	7.6	.47	11.9	15,000	1034	3.8	96
5/32"	4	26104-0500101	1/16" NPT Male	Plated Steel	.16	4.0	50	15.2	.39	9.9	15,000	1034	3.0	76
		26104-0350101	1/16" NPT Male	Plated Steel	.16	4.0	35	10.7	.39	9.9	15,000	1034	3.0	76
		26104-0250101	1/16" NPT Male	Plated Steel	.16	4.0	25	7.6	.39	9.9	15,000	1034	3.0	76

*See details on end fittings for these assemblies on page D-9 and specifications for all connection types in Section I.
**Outside diameter of end fitting sleeve.
***Maximum working pressure may be greater than specified.

THERMOPLASTIC HOSES & FLEX LANCES
CUSTOM ORDER

Thermoplastic hoses and flex lances are available in custom lengths or with special end fitting combinations or covers. Common lengths and configurations are available on the two preceding pages.

- Constructed of plastic core reinforced with high tensile steel wire and enclosed in a tough, flexible thermoplastic jacket
- Smooth plastic core minimizes pressure loss and offers the maximum resistance to damage caused by aging, moisture absorption, and changing environmental factors
- See pages D-18–D-20 for pressure drop graphs

HOSE SERIES

NOMINAL HOSE I.D.		SERIES	INSIDE DIAMETER		OUTSIDE DIAMETER*		MAX. WORKING PRESSURE**		MIN. BURST PRESSURE**		BEND RADIUS		WEIGHT	
in	mm		in	mm	in	mm	psi	bar	psi	bar	in	mm	lb/ft	kg/m
3/4	20	29313	.74	18.7	1.17	29.7	10,000	689	37,500	2585	9.8	248	.91	1.35
1/2	13	28524	.50	12.7	.87	22.0	15,000	1034	37,500	2585	5.6	142	.40	0.59
1/2	13	28481	.50	12.7	.76	19.3	10,000	689	25,000	1723	7.9	200	.29	0.43
5/16	8	28673	.32	8.1	.63	16.0	15,000	1034	37,500	2585	4.3	109	.26	0.38
5/16	8	27560	.32	8.1	.53	13.4	10,000	689	29,000	1999	5.1	129	.13	0.19
1/4	6	28490	.25	6.3	.49	12.4	15,000	1034	37,500	2585	4.3	109	.19	0.28
1/4	6	26108	.25	6.3	.46	11.6	15,000	1034	31,250	2154	4.3	109	.12	0.17
3/16	5	26106	.20	5.0	.37	9.3	15,000	1034	37,500	2585	3.8	96	.08	0.11
5/32	4	26104	.16	4.0	.32	8.1	15,000	1034	37,500	2585	3.0	76	.07	0.10
1/8	3	28596	.13	3.3	.27	6.8	15,000	1034	36,200	2495	2.4	60	.05	0.07

* Outside diameter of hose material (end fitting diameter will be greater).
** Maximum working pressure and minimum burst pressure may be greater than specified.

HOSE COVER OPTIONS

Abrasion Cover Guard

Burst Shield Guard

Cordura Cover Guard

Abrasion Cover Guard (Code: 1)

Constructed of clear PVC and reinforced with a rigid spiral coil, the Abrasion Cover protects the hose from external damage caused by vibration or movement along rough or uneven surfaces. VSS color-coded.

Burst Shield Guard (Code: 2)

Constructed of steel wire reinforced heavy-duty synthetic rubber. The Burst Shield Guard helps to protect the user and/or surrounding areas from hose failures.

Cordura Cover Guard (Code: 4)

Heavy-duty, braided nylon cover protects hose from abrasion damage caused by vibration or movement along a rough surface.

THERMOPLASTIC HOSES & FLEX LANCES
END FITTINGS

Use the information on this page to select the connections desired for custom thermoplastic hoses and flex lances.

MALE PIPE THREADS (NPT MALE)

NOMINAL HOSE I.D.		SERIES	END FITTING CONNECTION*	FITTING LENGTH (L)		FITTING O.D. (D)		FITTING CODE**	
in	mm			in	mm	in	mm	SS	PS
3/4	20	29313	1" NPT Male	4.70	119.3	1.45	36.8	-	07
			3/4" NPT Male	4.50	114.3	1.45	36.8	13	06
1/2	13	28524	1/2" NPT Male	3.60	91.4	1.14	28.9	12	05
1/2	13	28481	1/2" NPT Male	3.35	85.0	1.02	25.9	-	05
5/16	8	28673	3/8" NPT Male	2.90	73.6	.86	21.8	-	04
			1/4" NPT Male	2.90	73.6	.86	21.8	-	03
5/16	8	27560	3/8" NPT Male	1.60	40.6	.69	17.5	-	04
			1/4" NPT Male	1.57	39.8	.69	17.5	-	03
1/4	6	28490	1/4" NPT Male	1.39	35.3	.57	14.5	-	03
			1/8" NPT Male	2.21	56.1	.57	14.4	-	02
1/4	6	26108	1/4" NPT Male	1.40	35.5	.53	13.4	-	03
			1/8" NPT Male	2.25	57.1	.55	13.9	-	02
3/16	5	26106	1/4" NPT Male	2.43	61.7	.51	12.9	-	03
			1/8" NPT Male	1.30	33.0	.47	11.9	09	02
5/32	4	26104	1/8" NPT Male	1.20	30.4	.39	9.9	-	02
			1/16" NPT Male	1.20	30.4	.39	9.9	-	01
1/8	3	28596	1/8" NPT Male	1.96	49.7	.55	13.9	-	02
			1/16" NPT Male	1.17	29.7	.36	9.1	-	01

* See details on all connection types in Section I.
** SS: Stainless steel; PS: Plated carbon steel

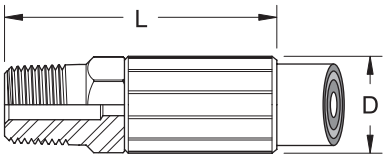

Male Pipe Threads

FEMALE PIPE THREADS (NPT FEMALE)

NOMINAL HOSE I.D.		SERIES	END FITTING CONNECTION*	FITTING LENGTH (L)		FITTING O.D. (D)		FITTING CODE**	
in	mm			in	mm	in	mm	SS	PS
1/4	6	28490	1/4" NPT Female	2.70	68.5	.85	21.5	20	17
1/4	6	26108	1/4" NPT Female	2.70	68.5	.55	13.9	20	17
3/16	5	26106	1/8" NPT Female	1.70	43.1	.47	11.9	-	16
5/32	4	26104	1/16" NPT Female	1.58	40.1	.39	9.9	-	15

* See details on all connection types in Section I.
** SS: Stainless steel; PS: Plated carbon steel

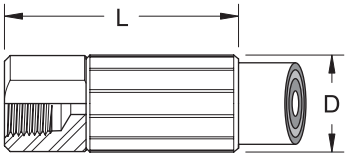

Female Pipe Threads

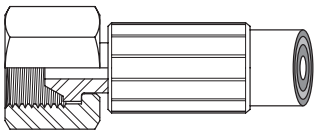

Type M Female

TYPE M FEMALE

NOMINAL HOSE I.D.		SERIES	END FITTING CONNECTION*	FITTING CODE**	
in	mm			SS	PS
3/4	20	29313	1-5/16" Type M Female	44	-
1/2	13	28524	1" Type M Female	42	-
1/2	13	28481	1" Type M Female	42	-
5/16	8	28673	3/4" Type M Female	40	-
5/16	8	27560	3/4" Type M Female	40	-
1/4	6	26108	9/16" Type M Female	39	-
1/4	6	28490	9/16" Type M Female	39	-
3/16	5	26106	9/16" Type M Female	39	-
5/32	4	26104	9/16" Type M Female	39	-
1/8	3	28596	9/16" Type M Female	39	-

*See details on all connection types in Section I.
**SS: Stainless steel; PS: Plated carbon steel

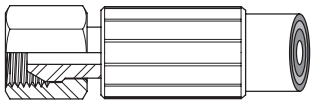

BSP Female

BSP FEMALE

NOMINAL HOSE I.D.		SERIES	END FITTING CONNECTION*	FITTING CODE**	
in	mm			SS	PS
1/2	13	28524	1/2" BSP Female	-	61
1/2	13	28481	1/2" BSP Female	-	61
5/16	8	28673	3/8" BSP Female	-	60
5/16	8	27560	3/8" BSP Female	-	60
1/4	6	28490	1/4" BSP Female	-	59
1/4	6	26108	1/4" BSP Female	-	59
3/16	5	26106	1/4" BSP Female	-	59
5/32	4	26104	9/16" Type M Female	39	-

*See details on all connection types in Section I.
**SS: Stainless steel; PS: Plated carbon steel

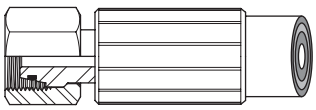

Metric Female

METRIC FEMALE

NOMINAL HOSE I.D.		SERIES	END FITTING CONNECTION*	FITTING CODE**	
in	mm			SS	PS
3/4	20	29313	M36 x 2.0 Female	-	47
1/2	13	28524	M24 x 1.5 Female	50	46
1/2	13	28481	M24 x 1.5 Female	-	46
5/16	8	28673	M24 x 1.5 Female	-	46

*See details on all connection types in Section I.
** SS: Stainless steel; PS: Plated carbon steel

STAINLESS STEEL BRAIDED FLEX LANCES

- Abrasion resistant, braided stainless steel cover
- Teflon® core ensures minimal pressure loss
- Small minimum bend radius allows easy passage through elbows, U-tubes and other sharp bends
- Stainless steel braid-anchored end fittings
- See page D-20 for pressure drop graphs
- Available in 25' and 50' lengths (7.6 m and 15.2 m)
- See dimensions for all end fittings and nozzle flow information for Mini-Mole nozzles on the following pages
- 350 degree F rated lances

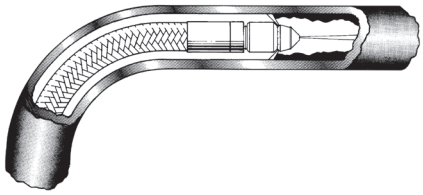

NOMINAL HOSE I.D.		PART NO.	END FITTINGS*		INSIDE DIAMETER		LENGTH		END FITTING DIAMETER**		MAX. OPERATING PRESSURE		MIN. BEND RADIUS	
in	mm		INLET END	NOZZLE END	in	mm	ft	mm	in	mm	psi	bar	in	mm
5/16"	8	25571-50	1/4" NPT Male	1/4" NPT Male	.300	7.6	50	15.2	.721	18.3	8,000	551	5.0	127
		25571-25	1/4" NPT Male	1/4" NPT Male	.300	7.6	25	7.6	.721	18.3	8,000	551	5.0	127
1/4"	6	25570-50	1/8" NPT Male	1/8" NPT Male	.229	5.8	50	15.2	.575	14.6	10,000	689	3.0	76
		25570-25	1/8" NPT Male	1/8" NPT Male	.229	5.8	25	7.6	.575	14.6	10,000	689	3.0	76
		50752-50	1/8" NPT Male	5/16" UNEF Male	.229	5.8	50	15.2	.565	14.3	10,000	689	3.0	76
		50752-25	1/8" NPT Male	5/16" UNEF Male	.229	5.8	25	7.6	.565	14.3	10,000	689	3.0	76
1/4"	6	25568-50	1/8" NPT Male	1/8" NPT Male	.229	5.8	50	15.2	.500	12.7	8,000	551	3.0	76
		25568-25	1/8" NPT Male	1/8" NPT Male	.229	5.8	25	7.6	.500	12.7	8,000	551	3.0	76
		50673-50	1/8" NPT Male	5/16" UNEF Male	.229	5.8	50	15.2	.500	12.7	8,000	551	3.0	76
		50673-25	1/8" NPT Male	5/16" UNEF Male	.229	5.8	25	7.6	.500	12.7	8,000	551	3.0	76
1/8"	3	50559-50	1/16" NPT Male	1/16" NPT Male	.125	3.1	50	15.2	.340	8.6	8,000	551	2.0	50
		50559-25	1/16" NPT Male	1/16" NPT Male	.125	3.1	25	7.6	.340	8.6	8,000	551	2.0	50
		51162-50	1/16" NPT Male	1/4" UNEF Female	.125	3.1	50	15.2	.325	8.2	8,000	551	2.0	50
		51162-25	1/16" NPT Male	1/4" UNEF Female	.125	3.1	25	7.6	.325	8.2	8,000	551	2.0	50
		51498-50	1/16" NPT Male	Mini-Mole	.125	3.1	50	15.2	.335	8.5	8,000	551	2.0	50
		51498-25	1/16" NPT Male	Mini-Mole	.125	3.1	25	7.6	.335	8.5	8,000	551	2.0	50

*See end fitting dimensions on page D-8 and specifications for all connection types in Section I.
**Outside diameter of end fitting sleeve.

STAINLESS STEEL BRAIDED FLEX LANCES
END FITTINGS

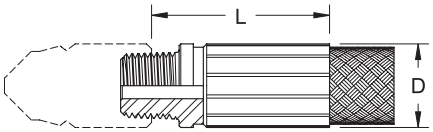

NPT MALE

For use with female pipe threaded tube cleaning nozzles (see pages G-50 to G-54).

NOMINAL HOSE I.D.	SERIES	END FITTING CONNECTION*	FITTING LENGTH** (L)		FITTING O.D. (D)	
			in	mm	in	mm
5/16"	25571	1/4" NPT Male	1.48	37.5	.721	18.3
1/4"	25570	1/8" NPT Male	1.25	31.7	.575	14.6
1/4"	25568	1/8" NPT Male	1.10	27.9	.500	12.7
1/8"	50559	1/16" NPT Male	.97	24.6	.340	8.6

*See details on all connection types in Section I.
**Add length of nozzle to "L" dimension to determine total rigid length.

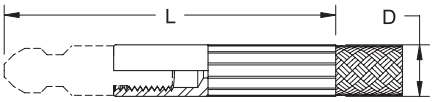

MACHINE SCREW THREAD FEMALE

For use with MS2 nozzles (see page G-53).

NOMINAL HOSE I.D.	SERIES	END FITTING CONNECTION*	RIGID LENGTH** (L)		FITTING O.D.		NOZZLE TYPE/SIZE
			in	mm	in	mm	
1/8"	51162	1/4" UNF Female	2.09	53.0	.325	8.2	MS2

*See details on all connection types in Section I.
**Combined length of nozzle and end fitting.

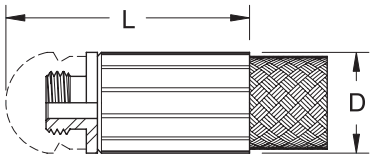

MACHINE SCREW THREAD MALE

For use with Series C nozzles (see page G-51).

NOMINAL HOSE I.D.	SERIES	END FITTING CONNECTION*	RIGID LENGTH** (L)		FITTING O.D.		NOZZLE TYPE/SIZE
			in	mm	in	mm	
1/4"	50752	5/16" UNEF Male	1.34	34.0	.565	14.3	C2
1/4"	50673	1/4" UNEF Male	1.38	35.0	.500	12.7	C1

*See details on all connection types in Section I.
**Combined length of nozzle and end fitting.

15,000 PSI (1,034 BAR)

MINI-MOLE

- Special end fitting with permanently attached nozzle
- Provides the shortest possible rigid length at the end of the lance to allow navigation through very sharp bends
- One standard nozzle pattern available
- Two standard flow ratings available, one for each flex lance length. See nozzle flow chart below.
- Contact a Jetstream sales representative for custom lengths, patterns or flow rates

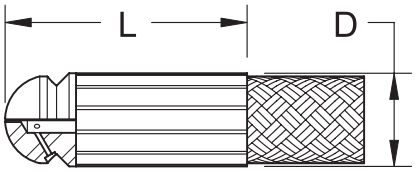

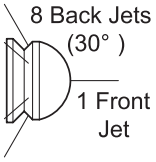

NOMINAL HOSE I.D.	SERIES	FITTING LENGTH** (L)		FITTING O.D.	
		in	mm	in	mm
1/8"	51498	.87	22.0	.335	8.5

MINI-MOLE NOZZLE FLOW

LANCE LENGTH		FLOW AT SPECIFIED PRESSURES (PSI/BAR)											
		3000	206	4000	275	5000	344	6000	413	7000	482	8000	551
ft	m	gpm	lpm	gpm	lpm	gpm	lpm	gpm	lpm	gpm	lpm	gpm	lpm
25	7.6	2.2	8.3	2.5	9.4	2.8	10.6	3.1	11.7	3.3	12.4	3.5	13.2
50	15.2	1.6	6.0	1.9	7.1	2.1	7.9	2.3	8.7	2.5	9.4	2.7	10.2

STEELFLEX™ LANCES

- Smallest outside diameters of any commercially available lances
- Special spring temper stainless steel can be used as either flex or rigid lance in very small tubes
- Integral nozzle and inlet fitting
- High strength material permits large inside to outside diameter
- Unlike normal rigid lances, the flexibility of SteelFlex permits use in confined space applications
- Two sizes available in lengths up to 50 ft (15 m)
- Coiled for transport and storage
- See page D-21 for pressure drop graphs

PART NO. XX = LENGTH (FT)	STANDARD LENGTHS	OUTSIDE DIAMETER		INSIDE DIAMETER		INLET CONNECTION*	MAX. OPERATING PRESSURE		BEND RADIUS A**		BEND RADIUS B***	
	ft	in	mm	in	mm		psi	bar	in	mm	in	mm
51015-XX	5, 10, 15, 20, 25, 35, 50	.170	4.3	.140	3.5	1/8" NPT Male	10,000	689	19	482	10	254
51020-XX	5, 10, 15, 20, 25, 35, 50	.140	3.5	.110	2.7	1/8" NPT Male	10,000	689	16	406	7	177

*See details on all connection types in Section I.
**Bend Radius A: Radius beyond which permanent set condition may occur.
***Bend Radius B: Radius beyond which kinking may occur.

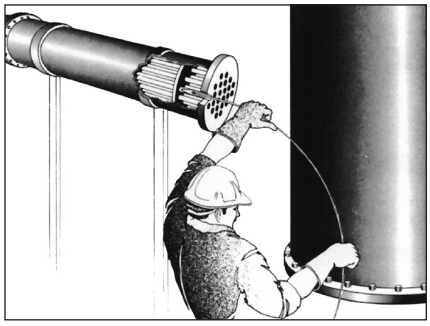

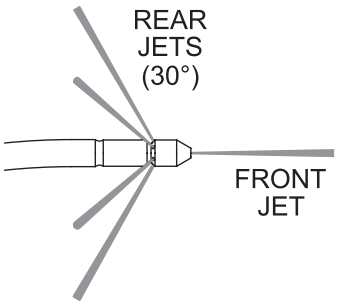

STANDARD PATTERNS

LENGTH (FT)	SERIES 51015 .170" O.D.	SERIES 51020 .140" O.D.
5'	1 Front 6 Back 30° **7 Jets Total**	1 Front 6 Back 30° **7 Jets Total**
10'	1 Front 5 Back 30° **6 Jets Total**	1 Front 6 Back 30° **7 Jets Total**
15'	1 Front 5 Back 30° **6 Jets Total**	1 Front 5 Back 30° 6 Jets Total
20'	1 Front 5 Back 30° **6 Jets Total**	1 Front 6 Back 30° **7 Jets Total**
25'	1 Front 5 Back 30° **6 Jets Total**	1 Front 5 Back 30° **6 Jets Total**
35'	1 Front 5 Back 30° **6 Jets Total**	1 Front 4 Back 30° **5 Jets Total**
50'	1 Front 5 Back 30° **6 Jets Total**	Not Available

RIGID LANCES

- For use in manual or automatic tube cleaning applications
- To order, use five digit part number followed by a dash (-) and length in feet (up to 35 ft)
- Available in a range of sizes and connections
- See pages D-21–D-23 for pressure drop graphs

NPT MALE X NPT MALE

For use with female pipe threaded tube cleaning nozzles (see Nozzle Section G).

PART NO. XX = LENGTH (FT)	CONNECTION TYPE*		OUTSIDE DIAMETER		INSIDE DIAMETER		MATERIAL	MAX. OPERATING PRESSURE	
	INLET END	NOZZLE END	in	mm	in	mm		psi	bar
54299-XX	1" NPT Male	1" NPT Male	1.315	33.40	.599	15.21	Stainless Steel	15,000	1034
56692-XX	3/4" NPT Male	3/4" NPT Male	1.050	26.67	.434	11.02	Stainless Steel	15,000	1034
53731-XX	3/4" NPT Male	3/4" NPT Male	1.050	26.67	.614	15.59	Stainless Steel	10,000	689
51082-XX	1/2" NPT Male	1/2" NPT Male	.840	21.33	.534	13.56	Stainless Steel	15,000	1034
50596-XX	3/8" NPT Male	3/8" NPT Male	.675	17.14	.415	10.54	Stainless Steel	15,000	1034
50594-XX	1/4" NPT Male	1/4" NPT Male	.540	13.71	.302	7.67	Stainless Steel	15,000	1034
50592-XX	1/8" NPT Male	1/8" NPT Male	.405	10.28	.215	5.46	Stainless Steel	15,000	1034
51081-XX	1/16" NPT Male	1/16" NPT Male	.312	7.92	.182	4.62	Stainless Steel	15,000	1034

*See details on all connection types in Section I.

NPT MALE X NPT FEMALE

For use with Series MP nozzles (see Nozzle Section G).

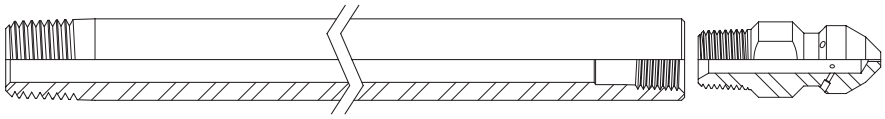

PART NO. XX = LENGTH (FT)	CONNECTION TYPE*		OUTSIDE DIAMETER		INSIDE DIAMETER		MATERIAL	MAX. OPERATING PRESSURE		NOZZLE TYPE/SIZE
	INLET END	NOZZLE END	in	mm	in	mm		psi	bar	
51069-XX	1/2" NPT Male	3/8" NPT Female	.840	21.33	.534	13.56	Stainless Steel	10,000	689	MP4
51068-XX	3/8" NPT Male	1/4" NPT Female	.675	17.14	.415	10.54	Stainless Steel	10,000	689	MP3
51067-XX	1/4" NPT Male	1/8" NPT Female	.540	13.71	.302	7.67	Stainless Steel	10,000	689	MP2
51066-XX	1/8" NPT Male	1/16" NPT Female	.405	10.28	.215	5.46	Stainless Steel	10,000	689	MP1

*See details on all connection types in Section I.

NPT MALE x .56MP MALE

For use with female pipe threaded tube cleaning nozzles (see Nozzle Section G).

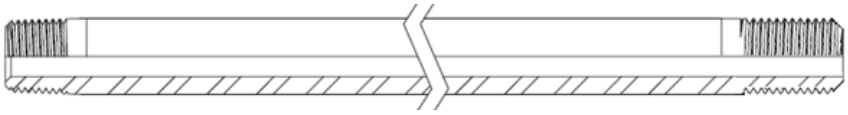

PART NO. XX = LENGTH (FT)	CONNECTION TYPE*		OUTSIDE DIAMETER		INSIDE DIAMETER		MATERIAL	MAX. OPERATING PRESSURE	
	INLET END	NOZZLE END	in	mm	in	mm		psi	bar
J55624-XX	1/4" NPT Male	.56 MP Male	.54	13.71	.312	7.92	Stainless Steel	15,000	1034

*See details on all connection types in Section I.

NPT MALE x .56JS LANCE MALE

For use with female pipe threaded tube cleaning nozzles (see Nozzle Section G).

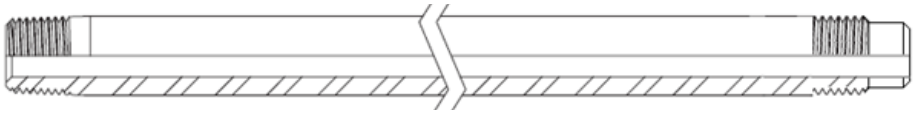

PART NO. XX = LENGTH (FT)	CONNECTION TYPE*		OUTSIDE DIAMETER		INSIDE DIAMETER		MATERIAL	MAX. OPERATING PRESSURE	
	INLET END	NOZZLE END	in	mm	in	mm		psi	bar
J55681-XX	1/4" NPT Male	.56 JS Lance Male	.54	13.71	.312	7.92	Stainless Steel	15,000	1034

*See details on all connection types in Section I.

NPT MALE x MACHINE SCREW THREAD FEMALE

For use with Series MS nozzles (see Nozzle Section G).

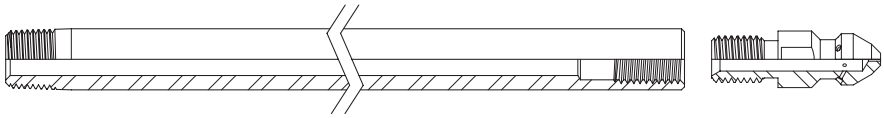

PART NO. XX = LENGTH (FT)	CONNECTION TYPE*		OUTSIDE DIAMETER		INSIDE DIAMETER		MATERIAL	MAX. OPERATING PRESSURE		NOZZLE TYPE/SIZE
	INLET END	NOZZLE END	in	mm	in	mm		psi	bar	
54411-XX	1/8" NPT Male	5/16" UNF Female	.405	10.28	.215	5.46	Stainless Steel	10,000	689	MS3

*See details on all connection types in Section I.

MACHINE SCREW THREAD MALE x MACHINE SCREW THREAD FEMALE

For use with Series MS nozzles (see Nozzle section G).

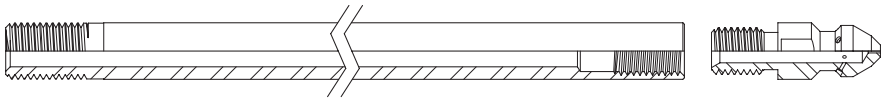

PART NO. XX = LENGTH (FT)	CONNECTION TYPE*		OUTSIDE DIAMETER		INSIDE DIAMETER		MATERIAL	MAX. OPERATING PRESSURE		NOZZLE TYPE/ SIZE
	INLET END	NOZZLE END	in	mm	in	mm		psi	bar	
51062-XX	3/8" UNF Male	5/16" UNF Female	.375	9.52	.209	5.30	Alloy Steel	10,000	689	MS3
51061-XX	5/16" UNF Male	1/4" UNF Female	.312	7.92	.182	4.62	Stainless Steel	10,000	689	MS2
51059-XX	1/4" UNF Male	#12 UNF Female	.250	6.35	.120	3.04	Alloy Steel	10,000	689	MS1
63222-XX	**M10 x .75 Male**	**5/16 - 24 Female**	**.415**	**10.5**	**.198**	**5.03**	**Alloy Steel**	**20,000**	**1379**	

*See details on all connection types in Section I.

PRESSURE DROP DATA

PRESSURE DROP DATA

The charts on this page and the next are used to approximate how much pressure will be lost through a particular hose or lance at a given flow rate. Because of frictional forces, the water exiting a hose or lance could be at a significantly lower pressure than at entry. In some cases, especially when using smaller hoses and lances, the flow rate that can be used is determined by pressure drop through a lance rather than the pump's maximum output.

PRESSURE DROP & NOZZLE SIZING

Pressure drop is especially important to understand when sizing nozzles. Use the following procedure for correct nozzle sizing:

1. Determine the pressure needed for a particular cleaning operation and subtract that amount from the desired pump operating pressure. The result is the permissible pressure drop.
2. Consult pressure drop chart for the hose to be used to determine what flow rate will result in the permissible pressure drop.

3a. If this flow rate exceeds the maximum flow of the pump, use the chart to find the pressure drop at the maximum pump flow and subtract that amount from the desired pump operating pressure to get the pressure at the nozzle. Then use the flow charts provided for the desired nozzle to select a nozzle, or nozzles, matching the desired flow and pressure.

3b. If this flow rate is within the capability of the pump, use the flow charts provided for the desired nozzle to select a nozzle, or nozzles, matching the desired flow and pressure.

NOTE: Doubling the length of a hose or lance will result in approximately twice the pressure drop at the same flow rate.

1" RUBBER WATERBLAST HOSE
Series 53235

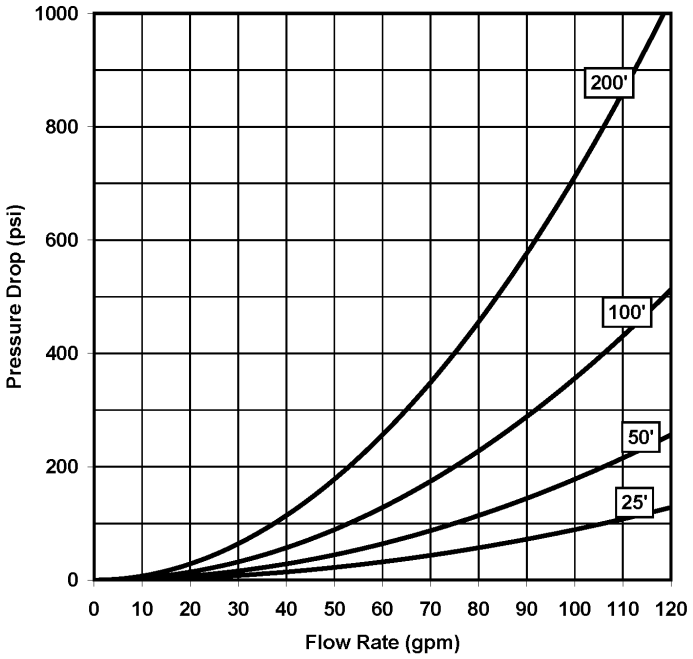

PRESSURE DROP DATA
HOSE

1/2" RUBBER WATERBLAST HOSE
Series 25513 & 52241

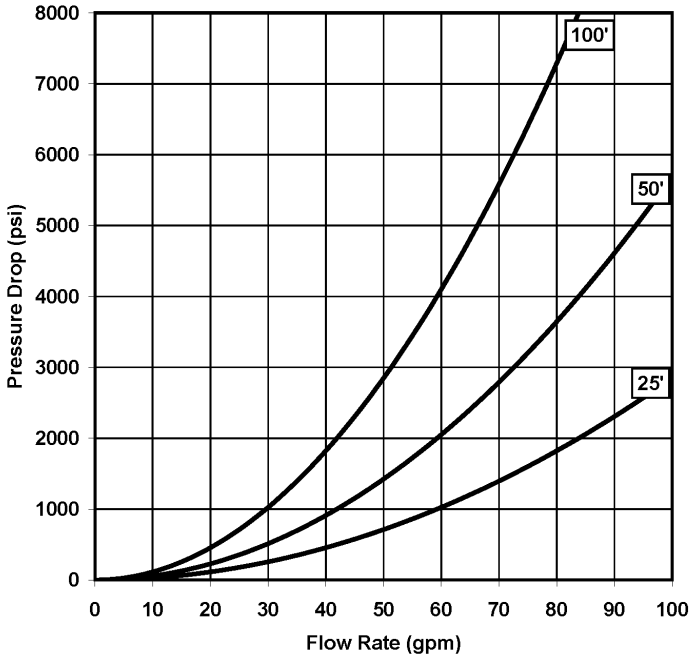

3/4" RUBBER WATERBLAST HOSE
Series 51118

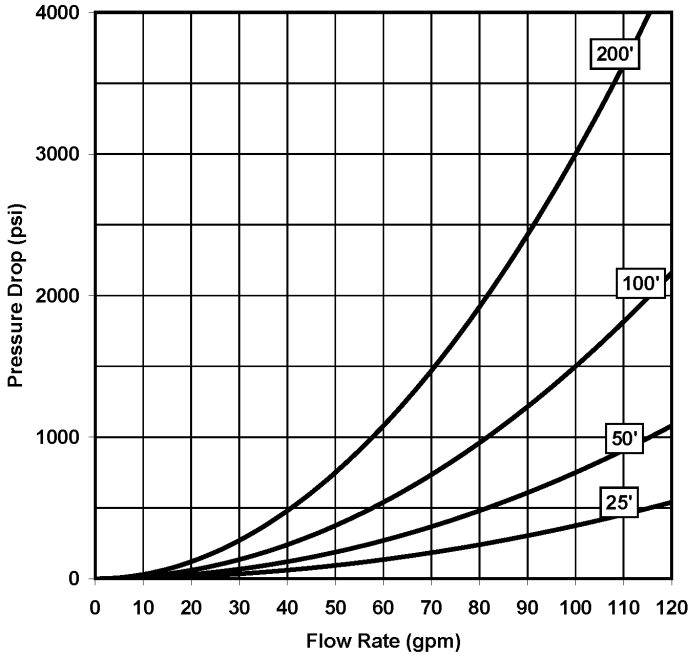

PRESSURE DROP DATA
HOSE & FLEX LANCE

3/8" RUBBER WATERBLAST HOSE SERIES 25576 & 52178

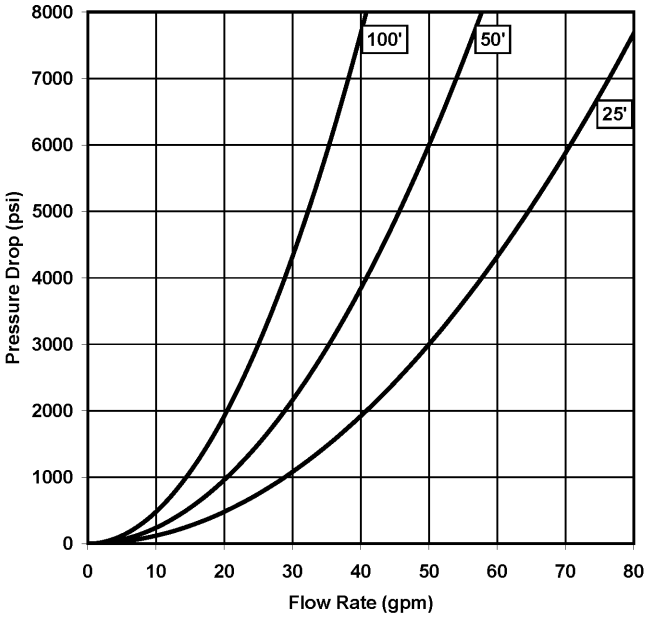

1/4" RUBBER WATERBLAST HOSE SERIES 25914

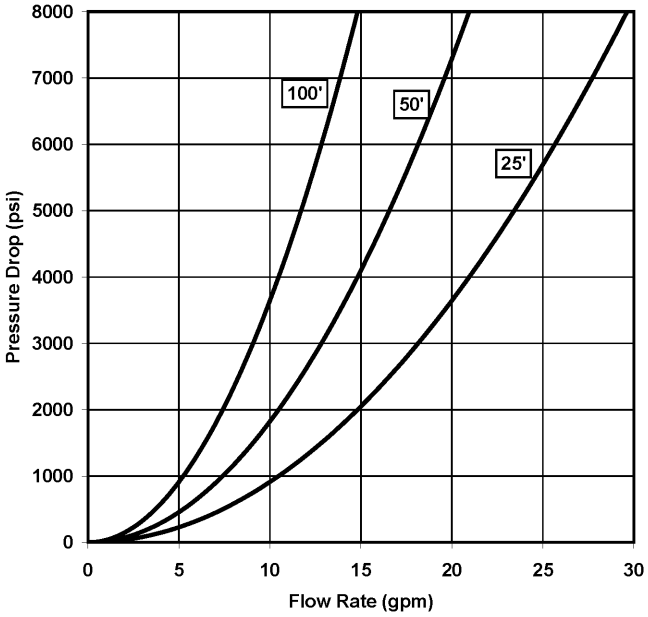

3/4" (20 MM) THERMOPLASTIC HOSE & FLEX LANCE – SERIES 29313

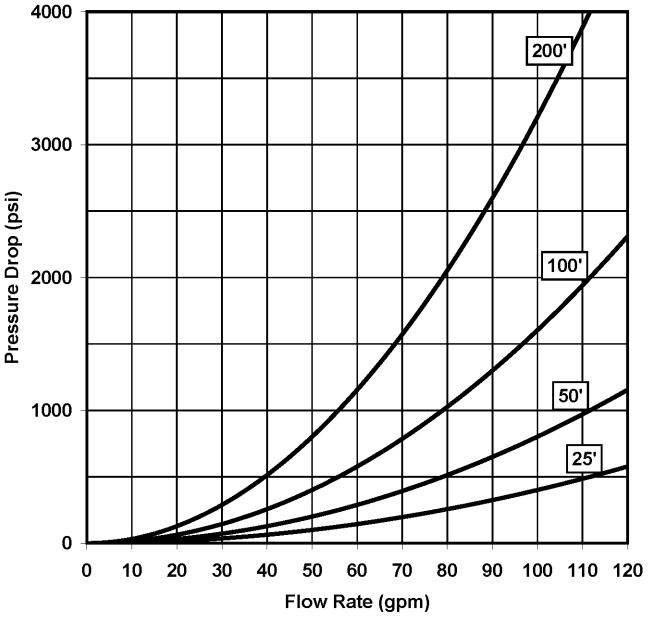

1/2" (13 MM) THERMOPLASTIC HOSE & FLEX LANCE – SERIES 28481 & 28524

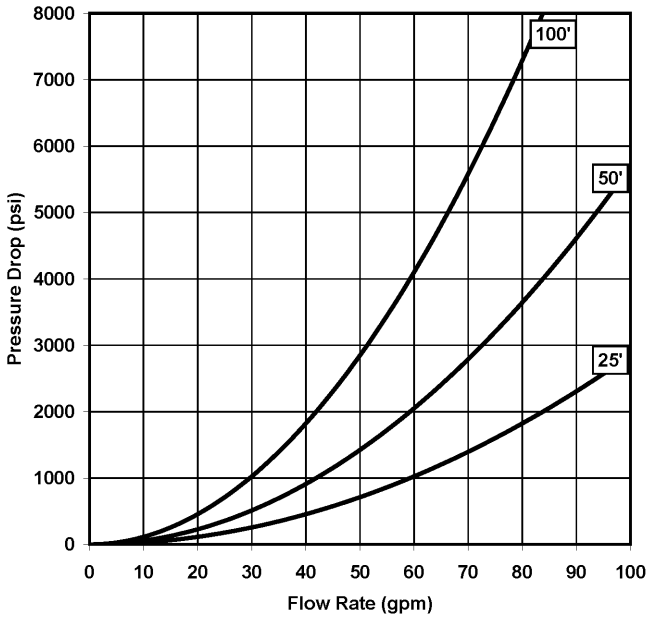

PRESSURE DROP DATA
HOSE & FLEX LANCE

5/16" (8 MM) THERMOPLASTIC HOSE & FLEX LANCE – SERIES 27560 & 28673

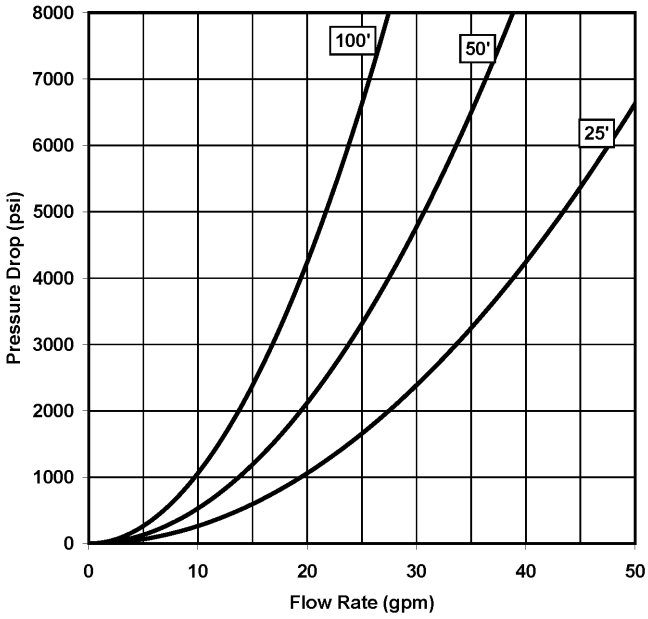

1/4" (6 MM) THERMOPLASTIC HOSE & FLEX LANCE – SERIES 26108 & 28490

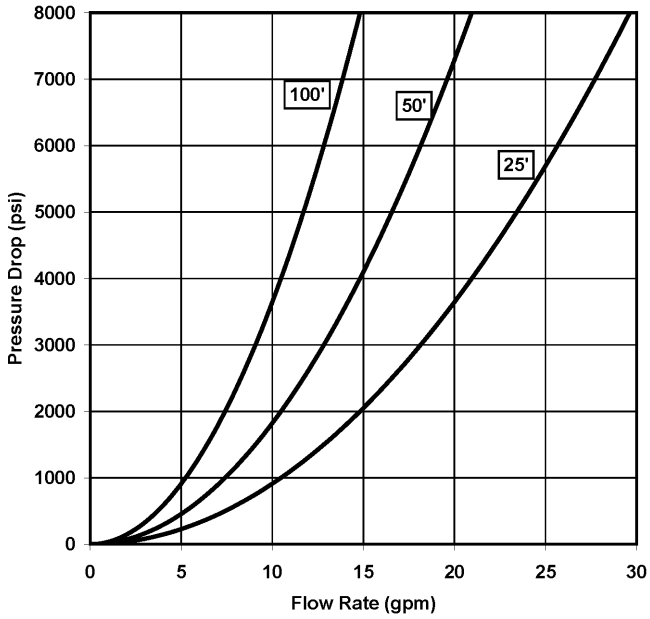

3/16" (5 MM) THERMOPLASTIC HOSE & FLEX LANCE – SERIES 26106

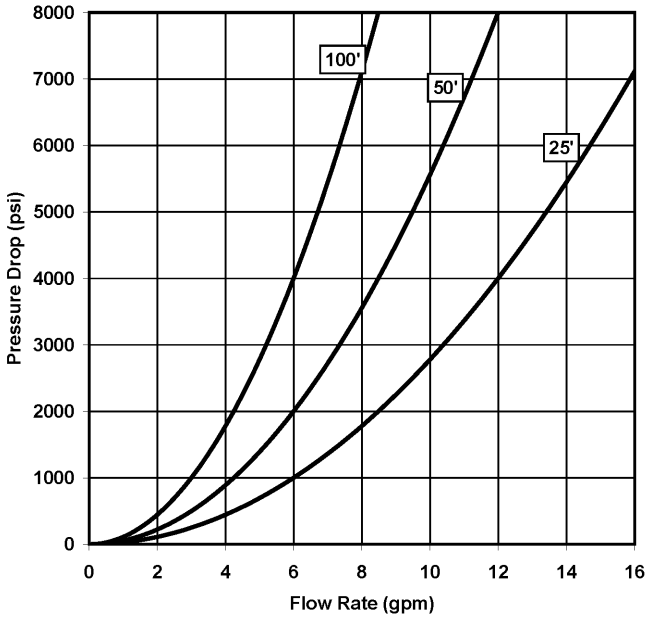

5/32" (4 MM) THERMOPLASTIC HOSE & FLEX LANCE – SERIES 26104

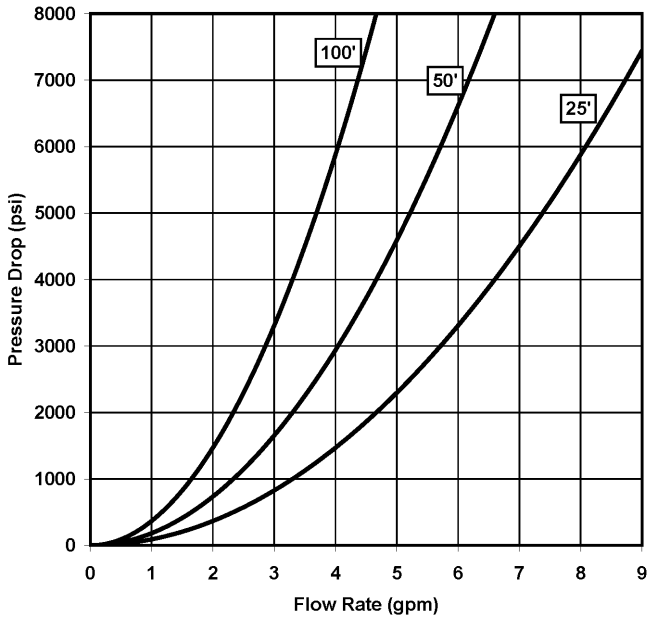

PRESSURE DROP DATA
FLEX LANCE

1/8" (3 MM) THERMOPLASTIC HOSE & FLEX LANCE – SERIES 28596

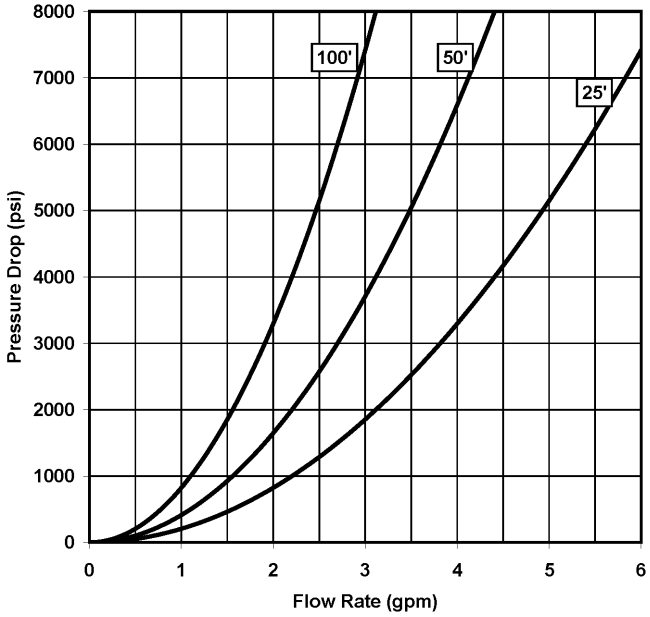

5/16" STAINLESS STEEL BRAIDED FLEX LANCE – SERIES 25571

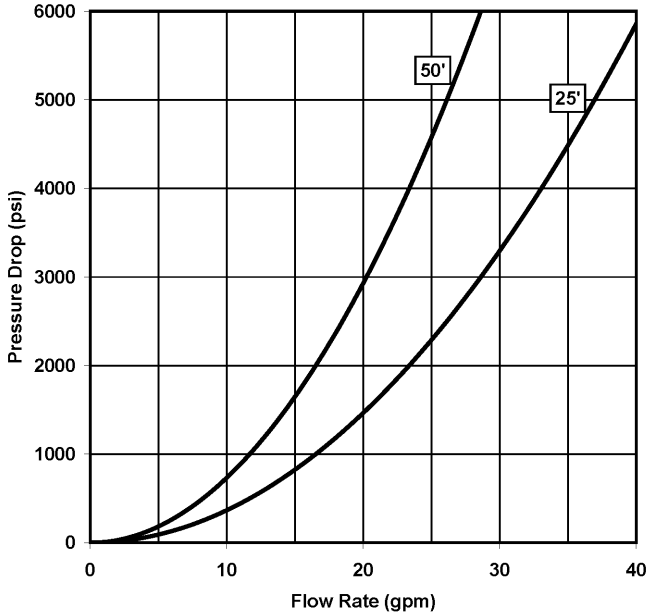

1/4" STAINLESS STEEL BRAIDED FLEX LANCE SERIES 25568, 25570, 50673 & 50752

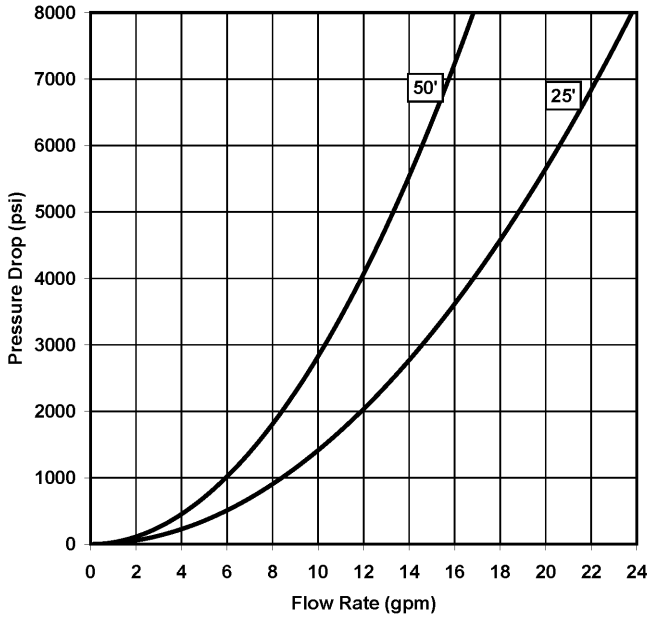

3/16" STAINLESS STEEL BRAIDED FLEX LANCE SERIES 50559, 51162 & 51498

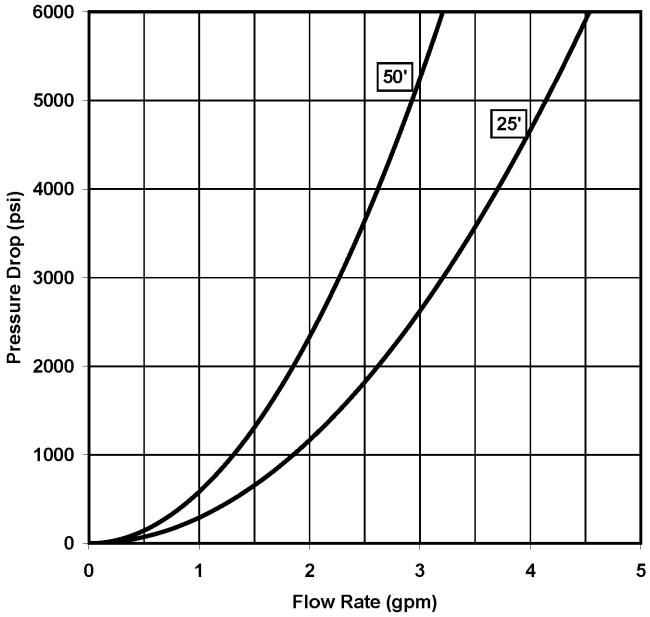

PRESSURE DROP DATA
FLEX LANCE

.170" O.D. STEELFLEX™ LANCE SERIES 51015

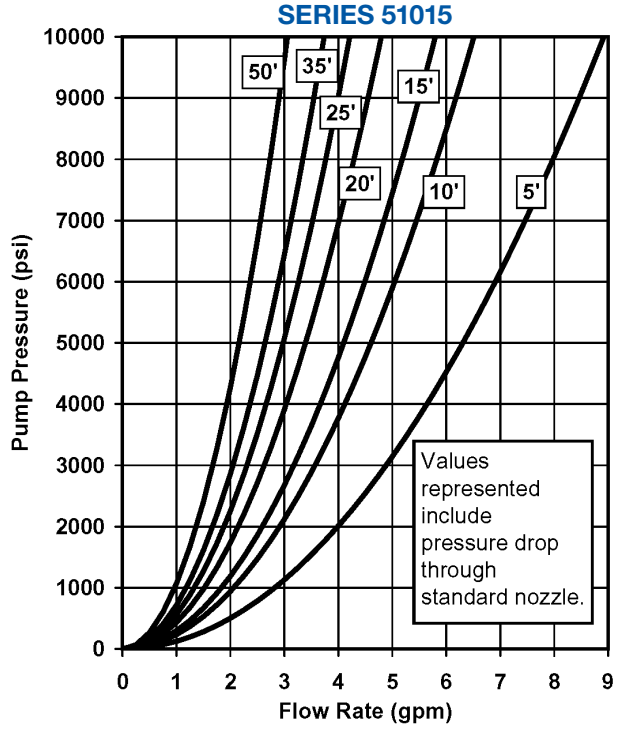

.140" O.D. STEELFLEX LANCE SERIES 51020

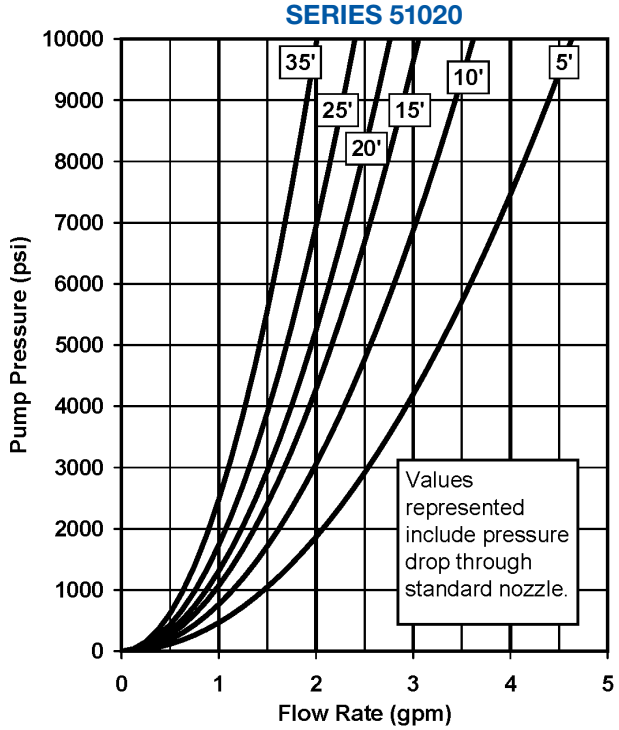

RIGID LANCES — 1" PIPE SERIES 54299

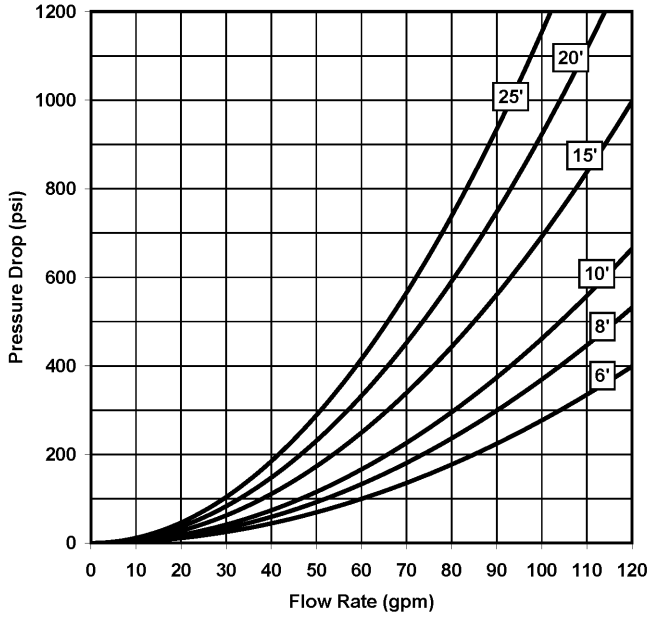

RIGID LANCES — 3/4" PIPE 15,000 PSI (1034 BAR) – SERIES 56692

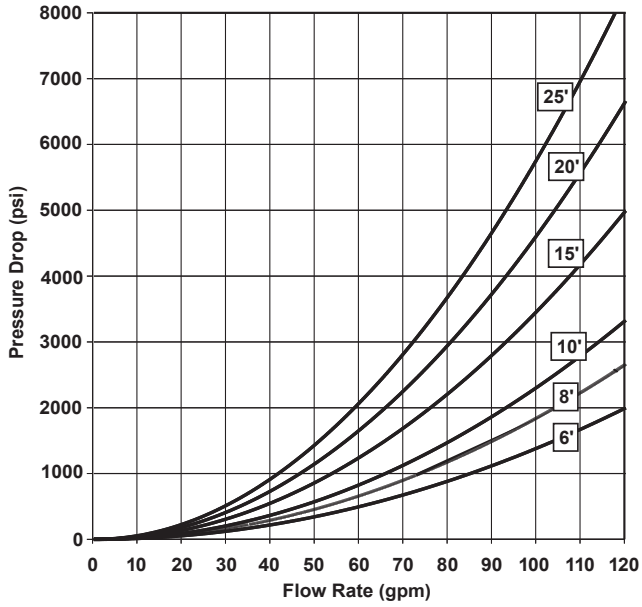

PRESSURE DROP DATA
RIGID LANCE

RIGID LANCES — 3/4" PIPE 10,000 PSI (689 BAR) – SERIES 53731

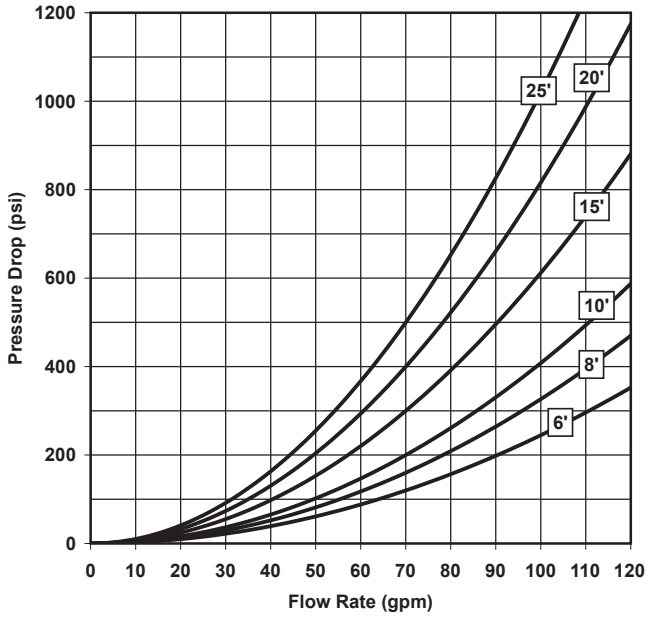

RIGID LANCES — 1/2" PIPE SERIES 51069 & 51082

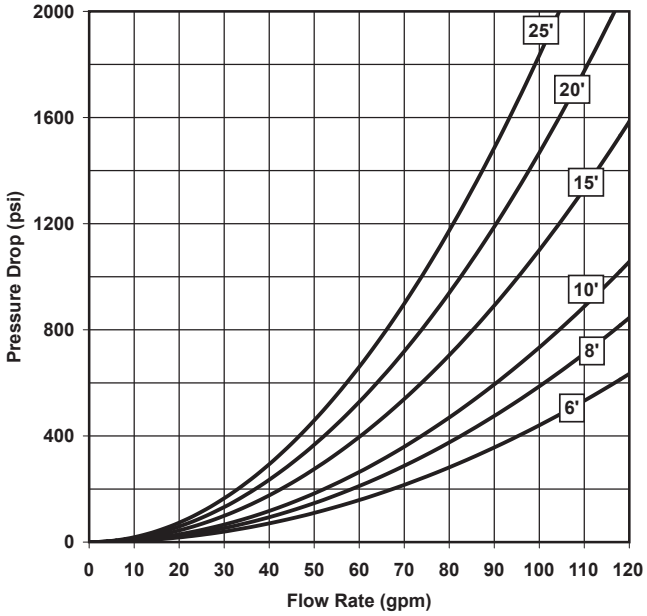

RIGID LANCES — 3/8" PIPE SERIES 50596 & 51068

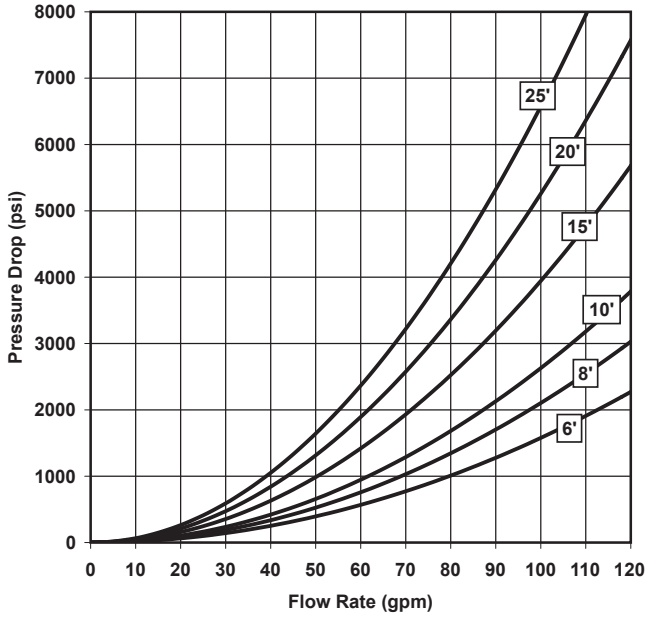

RIGID LANCES — 1/4" PIPE SERIES 50594 & 51067

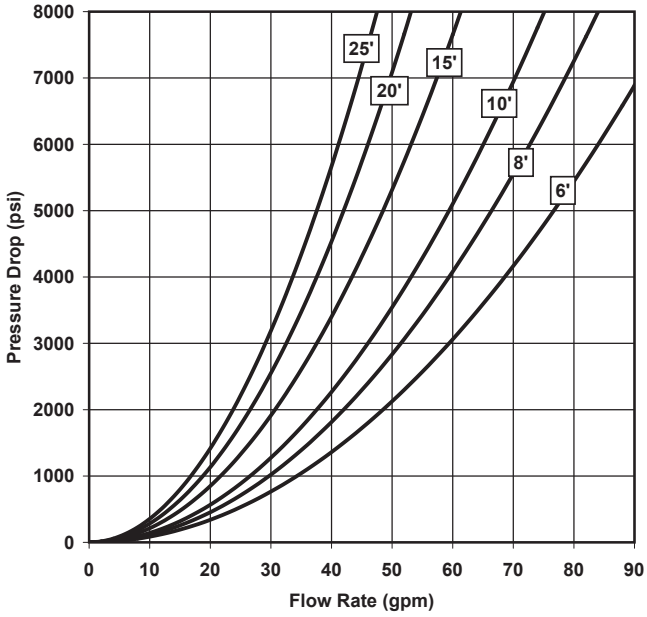

PRESSURE DROP DATA
RIGID LANCE

RIGID LANCES — 1/8" PIPE SERIES 50592, 51066 & 54411

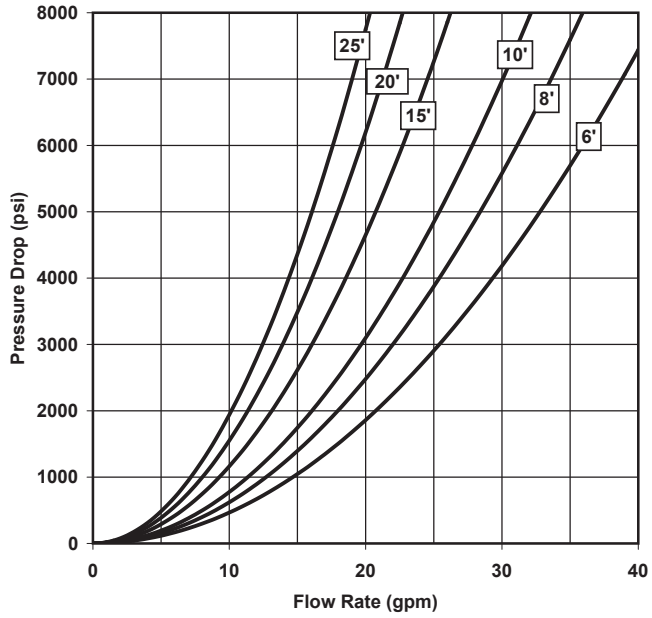

RIGID LANCES — 1/16" PIPE SERIES 51061 & 51081

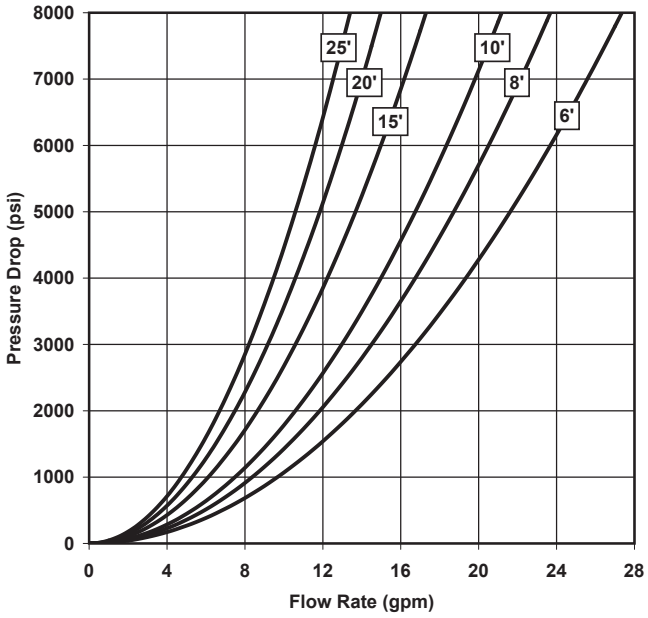

RIGID LANCES — 3/8" O.D. MECHANICAL TUBING – SERIES 51062

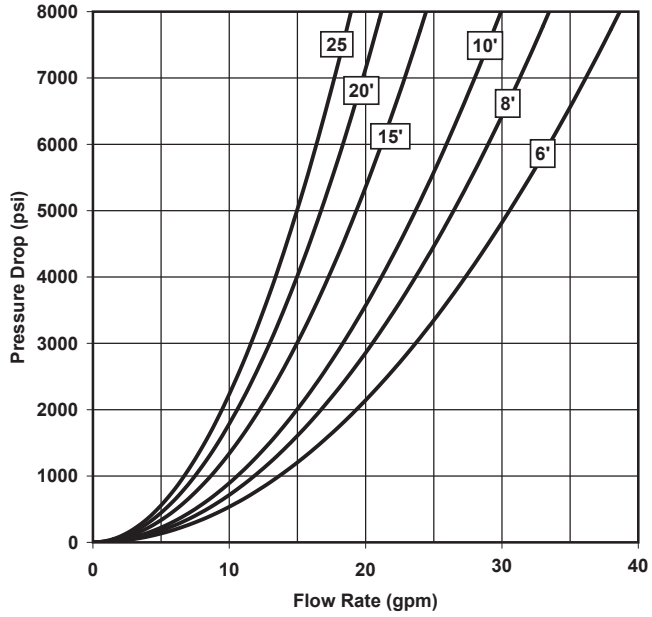

RIGID LANCES — 1/4" O.D. MECHANICAL TUBING – SERIES 51059

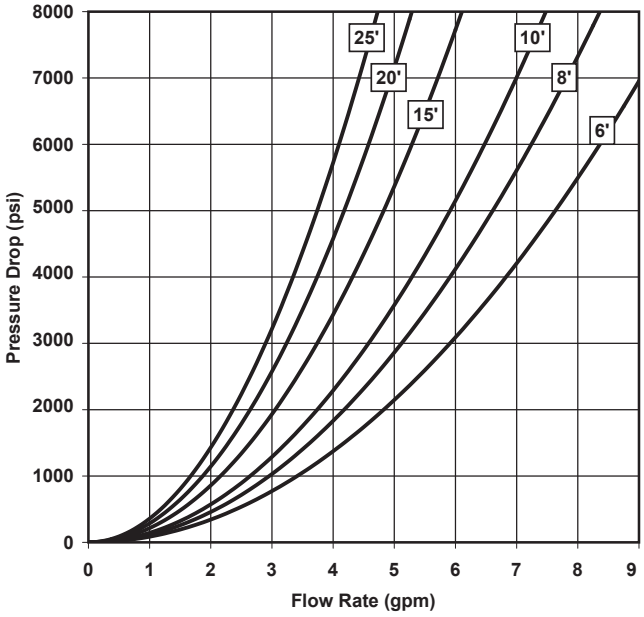

FITTINGS

Jetstream offers a wide variety of fittings with various connection types to fit your 15,000 psi application needs. The standard connection types, NPT, HF, HHP, Type M, MP and BSPP, are available in standard thread sizes. A benefit that Jetstream brings to the fittings realm is the ability to offer a wide variety of connections for any application.

*See details on all connection types in Section I.

THREAD LUBRICANTS & TEFLON TAPE

Thread Lubricants prevent threaded connections from galling together or seizing up.

Part No. 27721
Blue Goop Thread Lubricant
2 oz. Tube

Part No. 28197
Nickel-Based Anti-Seize
1 lb. Brush Top Can

Part No. 29057
Silver-Based Anti-Seize
7 oz. Stick

Part No. 40282
Teflon Tape
For use on Pipe Thread (NPT) connections, 1/2" x 520" Roll

GAUGE ACCESSORIES

(See page C-28 for available gauges.)

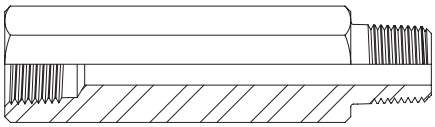

GAUGE EXTENSION

Part No. 55176

- Raises height of gauge for unobstructed reading
- 1/2" NPT Male x 1/2" NPT Female
- 4-1/2" (114 mm) long
- Stainless Steel
- Copper-plated for galling resistance

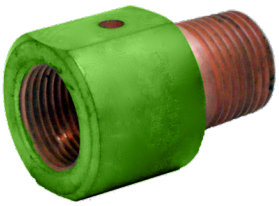

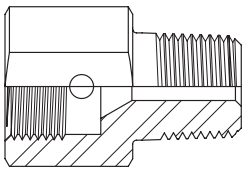

GAUGE ADAPTER

Part No. 55402

- Connects gauge (part no. 29818) to 1/2" NPT Female Port
- 1/2" NPT Male x 9/16" MP Female
- Small I.D. for proper seating of 9/16" HP tube nipple
- Stainless Steel
- Copper-plated for galling resistance
- 9/16" MP gland nut and collar sold separately

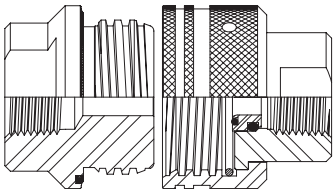

Male Female

QUICK CONNECT COUPLINGS

TWIS-LOK QUICK CONNECT COUPLINGS

Rugged Acme threads allow easy, hand-tight connection of hoses and other components. Stainless steel.

PART NO.	CONNECTION TYPE	COUPLING HALVES		SEAL ASSEMBLY	MAX. OPERATING PRESSURE	
		Male	Female		psi	bar
52663	1" NPT Female	52662	52667	52657	15,000	1034
51405	3/4" NPT Female	51334	51665	51624	15,000	1034
51402	1/2" NPT Female	51408	51670	51628	15,000	1034
51552	3/8" NPT Female	51550	51554	51628	15,000	1034

SCREW TYPE QUICK CONNECT COUPLINGS

Easy, hand-tight connection of hoses and other components.
Stainless steel. Also known as Partek Style.

PART NO.	CONNECTION TYPE	COUPLING HALVES		SEAL KIT	RETAINING RING	MAX. OPERATING PRESSURE	
		Male	Female			psi	bar
28921	1" NPT Female	28921M	28921F	28921S	J70380	15,000	1034
28844	3/4" NPT Female	28844M	28844F	28844S	J70381	15,000	1034
50989*	1/2" NPT Female	50990	52684	50989S	25690	15,000	1034
54180*	3/8" NPT Female	54178	54180F	50989S	25690	15,000	1034
54754*	1" Type M Male	54763	54762	54789	25690	20,000	1379
54767*	3/4" Type M Male	54764	54758	54789	25690	20,000	1379
54768*	9/16" MP Female	54766	54761	54789	25690	20,000	1379
56547	3/4" MP Female	56614	56616	N/A	J70381	20,000	1379

*Part has interchangeable halves.

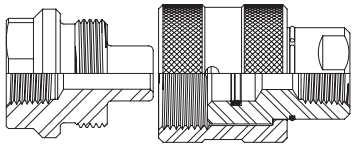

Male Female

LUG STYLE QUICK CONNECT COUPLINGS

Spring-loaded sleeve retracts for easy connection of hoses and other components. Plated steel.

PART NO.	CONNECTION TYPE	COUPLING HALVES		Back-Up Ring	O-Ring	MAX. OPERATING PRESSURE	
		Male	Female			psi	bar
50557	1/2" NPT Female	26175	26176	26657	25212	10,000	689
50906	3/8" NPT Female	26181	26182	26657	25212	10,000	689

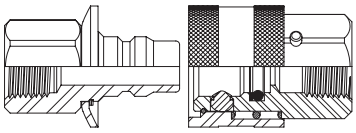

Male Female

CROSSES
PIPE THREAD (NPT)

Stainless steel.

PART NO.	CONNECTION TYPE	MAX. OPERATING PRESSURE	
		psi	bar
96048	1″ NPT Female	15,000	1034
54368	3/4″ NPT Female	15,000	1034
90262	1/2″ NPT Female	15,000	1034
29532	3/8″ NPT Female	15,000	1034
28577	1/4″ NPT Female	15,000	1034

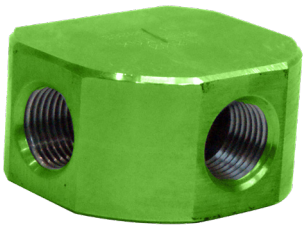

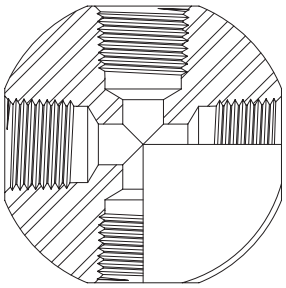

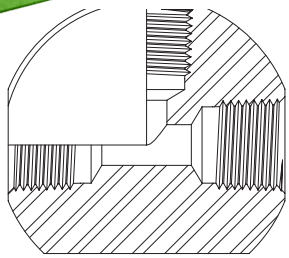

TEES
PIPE THREAD (NPT)

Stainless steel.

PART NO.	CONNECTION TYPE	MAX. OPERATING PRESSURE	
		psi	bar
52673	1″ NPT Female	15,000	1034
50385	3/4″ NPT Female	15,000	1034
51001	1/2″ NPT Female	15,000	1034
50354	3/8″ NPT Female	15,000	1034
26166	1/4″ NPT Female	15,000	1034
26171	1/8″ NPT Female	15,000	1034

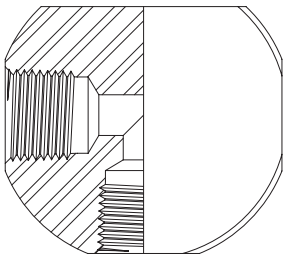

ELBOWS
90° PIPE THREAD (NPT)

Stainless steel.

PART NO.	CONNECTION TYPE	MAX. OPERATING PRESSURE	
		psi	bar
52672	1″ NPT Female	15,000	1034
50336	3/4″ NPT Female	15,000	1034
50300	1/2″ NPT Female	15,000	1034
50298	3/8″ NPT Female	15,000	1034
26162	1/4″ NPT Female	15,000	1034
26173	1/8″ NPT Female	15,000	1034

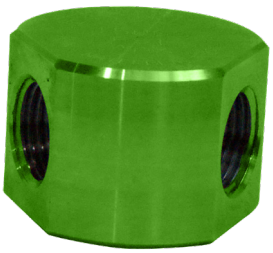

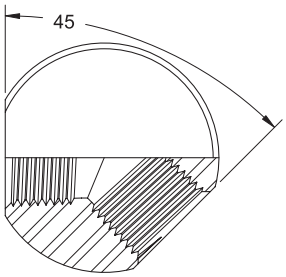

45° PIPE THREAD (NPT)

Stainless steel.

PART NO.	CONNECTION TYPE	MAX. OPERATING PRESSURE	
		psi	bar
56594	1″ NPT Female	15,000	1034
50302	3/4″ NPT Female	15,000	1034
50824	1/2″ NPT Female	15,000	1034
50296	3/8″ NPT Female	15,000	1034

HAMMER UNIONS
PIPE THREAD (NPT)

Stainless steel.

PART NO.	CONNECTION TYPE	SEAL	MAX. OPERATING PRESSURE	
			psi	bar
28319	1-1/4″ NPT Female	29319S	10,000	689
27181	1″ NPT Female	92011	15,000	1034
50392	3/4″ NPT Female	26314	15,000	1034
29485	1/2″ NPT Female	29485S	15,000	1034
29486	3/8″ NPT Female	29486S	15,000	1034

COUPLINGS
PIPE THREAD (NPT)

Machined heat-treated stainless steel to allow small outside diameters for tube cleaning.

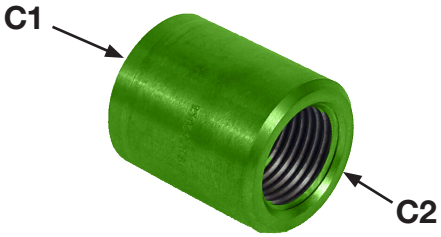

PART NO.	CONNECTION TYPES		OD		MAX. OPERATING PRESSURE	
	CONNECTION 1	CONNECTION 2	in	mm	psi	bar
52676	1″ NPT Female	1″ NPT Female	2.00	50.8	15,000	1034
28894	1″ NPT Female	3/4″ NPT Female	2.00	50.8	15,000	1034
J55701	1″ NPT Female	1/2″ NPT Female	2.00	50.8	15,000	1034
26055	3/4″ NPT Female	3/4″ NPT Female	1.50	38.1	15,000	1034
26067	3/4″ NPT Female	1/2″ NPT Female	1.50	38.1	15,000	1034
26059	3/4″ NPT Female	3/8″ NPT Female	1.50	38.1	15,000	1034
26056	1/2″ NPT Female	1/2″ NPT Female	1.19	30.2	15,000	1034
26072	1/2″ NPT Female	3/8″ NPT Female	1.19	30.2	15,000	1034
50342	1/2″ NPT Female	1/4″ NPT Female	1.25	31.8	15,000	1034
50059	1/2″ NPT Female	1/8″ NPT Female	1.19	30.2	15,000	1034
26057	3/8″ NPT Female	3/8″ NPT Female	.88	22.2	15,000	1034
26061	3/8″ NPT Female	1/4″ NPT Female	1.13	28.6	15,000	1034
26064	3/8″ NPT Female	1/8″ NPT Female	.94	23.8	15,000	1034
50816	1/4″ NPT Female	1/4″ NPT Female	.75	19.1	15,000	1034
50852	1/4″ NPT Female	1/8″ NPT Female	.75	19.1	15,000	1034
J55702	1/4″ NPT Female	1/16″ NPT Female	.75	19.1	15,000	1034
51191	1/8″ NPT Female	1/8″ NPT Female	.50	12.7	15,000	1034
50933	1/8″ NPT Female	1/16″ NPT Female	.50	12.7	15,000	1034
50638	1/16″ NPT Female	1/16″ NPT Female	.40	10.2	15,000	1034

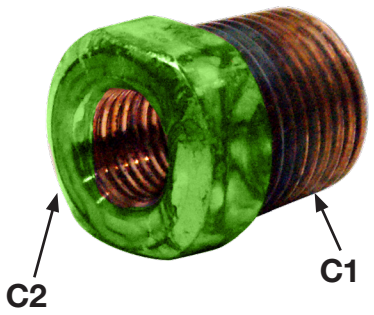

REDUCING BUSHINGS
PIPE THREAD (NPT)

Stainless steel. Copper-plated for galling resistance.

PART NO.	CONNECTION TYPES		MAX. OPERATING PRESSURE	
	CONNECTION 1	CONNECTION 2	psi	bar
29054	2″ NPT Male	1-1/2″ NPT Female	7,500	517
J70392	2″ NPT Male	1″ NPT Female	7,500	517
28611	1-1/2″ NPT Male	1″ NPT Female	7,500	517
29828	1-1/4″ NPT Male	1″ NPT Female	7,500	517
26157	1″ NPT Male	3/4″ NPT Female	15,000	1034
26124	1″ NPT Male	1/2″ NPT Female	15,000	1034
54721	1″ NPT Male	1/4″ NPT Female	15,000	1034
26065	3/4″ NPT Male	1/2″ NPT Female	15,000	1034
26063	3/4″ NPT Male	3/8″ NPT Female	15,000	1034
26069	3/4″ NPT Male	1/4″ NPT Female	15,000	1034
26074	3/4″ NPT Male	1/8″ NPT Female	15,000	1034
26062	1/2″ NPT Male	3/8″ NPT Female	15,000	1034
25904	1/2″ NPT Male	1/4″ NPT Female	15,000	1034
25902	1/2″ NPT Male	1/8″ NPT Female	15,000	1034
53623	1/2″ NPT Male	1/16″ NPT Female	15,000	1034
25903	3/8″ NPT Male	1/4″ NPT Female	15,000	1034
25901	3/8″ NPT Male	1/8″ NPT Female	15,000	1034
28822	3/8″ NPT Male	1/16″ NPT Female	15,000	1034
26073	1/4″ NPT Male	1/8″ NPT Female	15,000	1034
J55719	1/4″ NPT Male	1/16″ NPT Female	15,000	1034
26158	1/8″ NPT Male	1/16″ NPT Female	15,000	1034

HEX NIPPLES
PIPE THREAD (NPT)

Stainless steel nipples are copper plated for galling resistance.

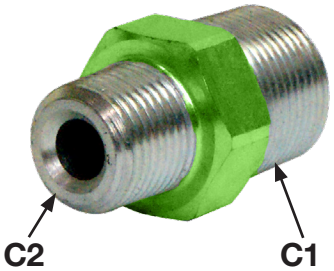

PART NO	CONNECTION TYPES		MATERIAL	MAXIMUM OPERATING PRESSURE	
	CONNECTION 1	CONNECTION 2		psi	bar
J70382	2″ NPT Male	2″ NPT Male	Stainless Steel	7,500	517
J70383	2″ NPT Male	1-1/2″ NPT Male	Stainless Steel	7,500	517
29055	1-1/2″ NPT Male	1-1/2″ NPT Male	Stainless Steel	7,500	517
J70384	1-1/2″ NPT Male	1-1/4″ NPT Male	Stainless Steel	7,500	517
J70385	1-1/4″ NPT Male	1-1/4″ NPT Male	Stainless Steel	7,500	517
J70386	1-1/4″ NPT Male	1″ NPT Male	Stainless Steel	7,500	517
52674	1″ NPT Male	1″ NPT Male	Stainless Steel	10,000	689
53054	1″ NPT Male	3/4″ NPT Male	Stainless Steel	10,000	689
J70387	1″ NPT Male	1/2″ NPT Male	Stainless Steel	10,000	689
26151	3/4″ NPT Male	3/4″ NPT Male	Stainless Steel	15,000	1034
51702	3/4″ NPT Male	1/2″ NPT Male	Plated Steel	15,000	1034
J70388	3/4″ NPT Male	3/8″ NPT Male	Stainless Steel	15,000	1034
J70389	3/4″ NPT Male	1/4″ NPT Male	Stainless Steel	15,000	1034
50488	1/2″ NPT Male	1/2″ NPT Male	Stainless Steel	15,000	1034
26153	1/2″ NPT Male	3/8″ NPT Male	Stainless Steel	15,000	1034
26084	1/2″ NPT Male	1/4″ NPT Male	Stainless Steel	15,000	1034
26154	1/2″ NPT Male	1/8″ NPT Male	Stainless Steel	15,000	1034
26152	3/8″ NPT Male	3/8″ NPT Male	Stainless Steel	15,000	1034
26155	3/8″ NPT Male	1/4″ NPT Male	Stainless Steel	15,000	1034
25454	3/8″ NPT Male	1/8″ NPT Male	Stainless Steel	15,000	1034
25455	1/4″ NPT Male	1/4″ NPT Male	Stainless Steel	15,000	1034
26075	1/4″ NPT Male	1/8″ NPT Male	Stainless Steel	15,000	1034
J70390	1/4″ NPT Male	1/16″ NPT Male	Stainless Steel	15,000	1034
25452	1/8″ NPT Male	1/8″ NPT Male	Stainless Steel	15,000	1034
26156	1/8″ NPT Male	1/16″ NPT Male	Stainless Steel	15,000	1034
J70391	1/16″ NPT Male	1/16″ NPT Male	Stainless Steel	15,000	1034

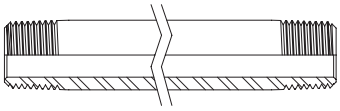

NIPPLES
PIPE THREAD (NPT)

Lengths from 3" to 24". Stainless steel.

PART NO. *Specify Length in inches in Place of XX*	CONNECTION TYPE	OD		ID		MAX. WORKING PRESSURE	
		in	mm	in	mm	psi	bar
J55703-XX	1″ NPT Male	1.315	33.4	.599	15.2	15,000	1034
26146-XX	3/4″ NPT Male	1.050	26.7	.434	11.0	15,000	1034
28875-XX	3/4″ NPT Male	1.050	26.7	.614	15.6	10,000	689
55450-XX	1/2″ NPT Male	.840	21.3	.534	13.6	15,000	1034
51098-XX	3/8″ NPT Male	.675	17.1	.415	10.5	15,000	1034
51106-XX	1/4″ NPT Male	.540	13.7	.302	7.7	15,000	1034
25215-XX*	1/8″ NPT Male	.405	10.3	.215	5.5	15,000	1034
51397-XX*	1/16″ NPT Male	.312	7.9	.182	4.6	15,000	1034

*A 2" length is available.

PLUGS
PIPE THREAD (NPT)

Stainless steel plugs are copper plated for galling resistance.

HEX HEAD

PART NO.	CONNECTION TYPE	MATERIAL	MAX. OPERATING PRESSURE	
			psi	bar
28602	1″ NPT Male	Stainless Steel	10,000	689
26147	3/4″ NPT Male	Stainless Steel	15,000	1034
25174	1/2″ NPT Male	Steel	15,000	1034
26148	3/8″ NPT Male	Steel	15,000	1034
26149	1/4″ NPT Male	Steel	15,000	1034
25120	1/8″ NPT Male	Steel	15,000	1034

SOCKET HEAD

PART NO.	CONNECTION TYPE	MATERIAL	MAX. OPERATING PRESSURE	
			psi	bar
26164	3/4″ NPT Male	Steel	15,000	1034
26115	1/2″ NPT Male	Steel	15,000	1034
26077	3/8″ NPT Male	Steel	15,000	1034
25392	1/4″ NPT Male	Stainless Steel	15,000	1034
26170	1/8″ NPT Male	Steel	15,000	1034
25395	1/16″ NPT Male	Steel	15,000	1034

Y-FITTINGS

Stainless steel.

PART NO.	CONNECTION TYPE	MAX. OPERATING PRESSURE	
		psi	bar
29678	1″ NPT Female	10,000	689
70040	3/4″ NPT Female	10,000	689
J70393	1/2″ NPT Female	15,000	1034

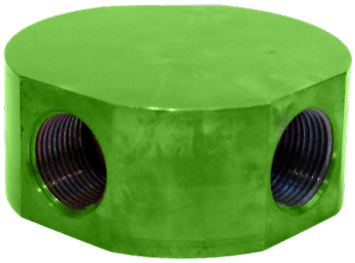

RIGID LANCE ADAPTERS

MACHINE SCREW FEMALE TO PIPE THREAD MALE (NPT MALE)

Used to connect small diameter rigid lances with machine screw threads to pipe threaded hoses and fittings. Stainless steel. Copper plated for galling resistance.

PART NO.	CONNECTION TYPE		MAX. OPERATING PRESSURE	
	CONNECTION 1	CONNECTION 2	psi	bar
51039	1/8″ NPT Male	1/4-28UNF Female	10,000	689
51041	1/8″ NPT Male	5/16-24UNF Female	10,000	689
51043	1/8″ NPT Male	3/8-24UNF Female	10,000	689

*See details on all connection types in Section I.

DUAL LANCE MANIFOLDS

PIPE THREAD (NPT)

Allows simultaneous operation of two lances. Stainless steel.

PART NO.	CONNECTION TYPE		MAX. OPERATING PRESSURE	
	CONNECTION 1	CONNECTION 2	psi	bar
50999	1/2″ NPT Female	1/4″ NPT Female	15,000	1034
50585	1/2″ NPT Female	1/8″ NPT Female	15,000	1034
51401	1/2″ NPT Female	1/16″ NPT Female	15,000	1034

STRAIGHT BOSS PLUGS

Stainless steel.

PART NO.	CONNECTION TYPE	REPLACEMENT TYPE	MAXIMUM OPERATING SYSTEM	
			psi	bar
25702	#12 Straight Boss Male	25670	10,000	689
25703	#8 Straight Boss Male	25824	10,000	689

PRESSURE CONVERSION FITTINGS

PIPE THREAD MALE (NPT MALE) TO TYPE M MALE ADAPTERS

Stainless steel. Copper plated for galling resistance.

PART NO.	CONNECTION TYPE		MAX. OPERATING PRESSURE	
	CONNECTION 1	CONNECTION 2	psi	bar
54719	1″ NPT Male	1-5/16″ Type M Male	10,000	689
J55704	1″ NPT Male	1″ Type M Male	10,000	689
28852	3/4″ NPT Male	1-5/16″ Type M Male	10,000	689
29178	3/4″ NPT Male	1″ Type M Male	10,000	689
J55706	3/4″ NPT Male	3/4″ Type M Male	10,000	689
J55707	3/4″ NPT Male	9/16″ Type M Male	10,000	689
29342	1/2″ NPT Male	1″ Type M Male	15,000	1034
29185	1/2″ NPT Male	3/4″ Type M Male	15,000	1034
28702	1/2″ NPT Male	9/16″ Type M Male	15,000	1034
01437	3/8″ NPT Male	9/16″ Type M Male	15,000	1034

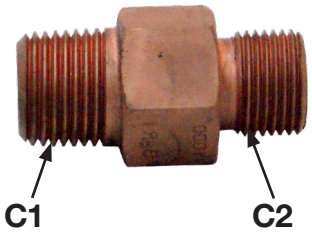

PIPE THREAD FEMALE (NPT FEMALE) TO TYPE M MALE ADAPTERS

Stainless steel.

PART NO.	CONNECTION TYPE		MAX. OPERATING PRESSURE	
	CONNECTION 1	CONNECTION 2	psi	bar
70167	1/2″ NPT Female	1″ Type M Male	15,000	1034
29327	1/2″ NPT Female	3/4″ Type M Male	15,000	1034
70168	3/8″ NPT Female	3/4″ Type M Male	15,000	1034

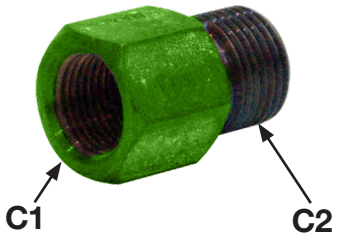

PIPE THREAD MALE (NPT MALE) TO MEDIUM PRESSURE MALE ADAPTERS

Stainless steel. Copper plated for galling resistance.

PART NO.	CONNECTION TYPE		MAX. OPERATING PRESSURE	
	CONNECTION 1	CONNECTION 2	psi	bar
55033	1″ NPT Male	1″ MP Male	15,000	1034
29669	1″ NPT Male	3/4″ MP Male	15,000	1034
29316	1″ NPT Male	9/16″ MP Male	15,000	1034
J55708	3/4″ NPT Male	1″ MP Male	10,000	689
29253	3/4″ NPT Male	3/4″ MP Male	10,000	689
28335	1/2″ NPT Male	1″ MP Male	15,000	1034
28261	1/2″ NPT Male	3/4″ MP Male	15,000	1034
27971	1/2″ NPT Male	9/16″ MP Male	15,000	1034
29000	1/2″ NPT Male	3/8″ MP Male	15,000	1034
J55709	3/8″ NPT Male	9/16″ MP Male	15,000	1034
J55711	3/8″ NPT Male	3/8″ MP Male	15,000	1034
29183	1/4″ NPT Male	9/16″ MP Male	15,000	1034
28610	1/4″ NPT Male	3/8″ MP Male	15,000	1034

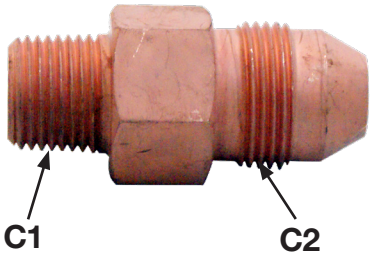

PIPE THREAD FEMALE (NPT FEMALE) TO MEDIUM PRESSURE MALE ADAPTERS

Stainless steel.

PART NO.	CONNECTION TYPE		MAX. OPERATING PRESSURE	
	CONNECTION 1	CONNECTION 2	psi	bar
29534	3/4″ NPT Female	3/4″ MP Male	10,000	689
29673	1/2″ NPT Female	1″ MP Male	15,000	1034
28903	1/2″ NPT Female	3/4″ MP Male	15,000	1034
28334	1/2″ NPT Female	9/16″ MP Male	15,000	1034
28003	1/2″ NPT Female	3/8″ MP Male	15,000	1034
28386	3/8″ NPT Female	9/16″ MP Male	15,000	1034
54958	3/8″ NPT Female	3/8″ MP Male	15,000	1034
29184	1/8″ NPT Female	9/16″ MP Male	15,000	1034
29182	1/4″ NPT Female	9/16″ MP Male	15,000	1034

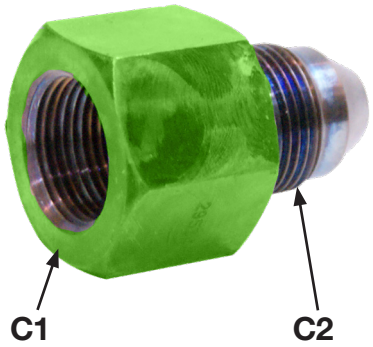

PIPE THREAD MALE (NPT MALE) TO MEDIUM PRESSURE FEMALE ADAPTERS

Stainless steel. Copper plated for galling resistance.

PART NO.	CONNECTION TYPE		MAX. OPERATING PRESSURE	
	CONNECTION 1	CONNECTION 2	psi	bar
29392	3/4″ NPT Male	1″ MP Female	10,000	689
00111	3/4″ NPT Male	3/4″ MP Female	10,000	689
28092	1/2″ NPT Male	9/16″ MP Female	15,000	1034
J55712	1/2″ NPT Male	3/8″ MP Female	15,000	1034
J55713	3/8″ NPT Male	9/16″ MP Female	15,000	1034
J55714	3/8″ NPT Male	3/8″ MP Female	15,000	1034
J55716	1/4″ NPT Male	9/16″ MP Female	15,000	1034
J55717	1/4″ NPT Male	3/8″ MP Female	15,000	1034

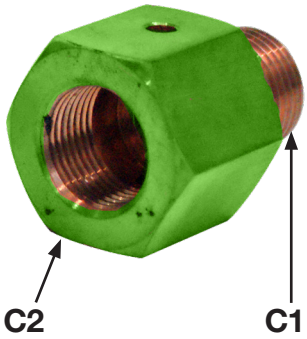

PIPE THREAD FEMALE (NPT FEMALE) TO MEDIUM PRESSURE FEMALE ADAPTERS

Stainless steel.

PART NO.	CONNECTION TYPE		MAX. OPERATING PRESSURE	
	CONNECTION 1	CONNECTION 2	psi	bar
29186	3/4″ NPT Female	9/16″ MP Female	10,000	689
29279	1/2″ NPT Female	3/4″ MP Female	15,000	1034
29010	1/2″ NPT Female	9/16″ MP Female	15,000	1034
28523	1/4″ NPT Female	9/16″ MP Female	15,000	1034

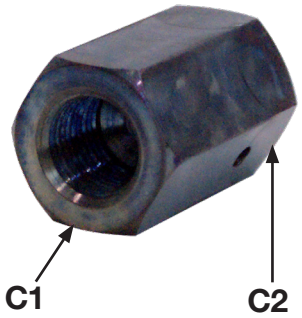

PIPE THREAD FEMALE (NPT FEMALE) TO HIGH PRESSURE MALE ADAPTER

Stainless steel.

PART NO.	CONNECTION TYPE		MAX. OPERATING PRESSURE	
	CONNECTION 1	CONNECTION 2	psi	bar
59189	1/2″ NPT Female	1/4" HP Male	15,000	1034

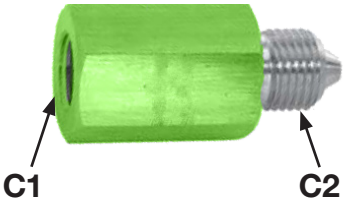

PIPE THREAD MALE (NPT MALE) TO BRITISH STANDARD PIPE (BSPP) MALE ADAPTERS

Stainless steel. Copper plated for galling resistance.

PART NO.	CONNECTION TYPE		MAX. OPERATING PRESSURE	
	CONNECTION 1	CONNECTION 2	psi	bar
J55789	1″ NPT Male	G3/4″ BSPP Male	15,000	1034
55099	3/4″ NPT Male	G3/4″ BSPP Male	15,000	1034
55098	1/2″ NPT Male	G1/2″ BSPP Male	15,000	1034
55097	1/2″ NPT Male	G3/8″ BSPP Male	15,000	1034
55096	1/2″ NPT Male	G1/4″ BSPP Male	15,000	1034
67173	3/4″ NPT Male	G1/4″ BSPP Male	15,000	1034

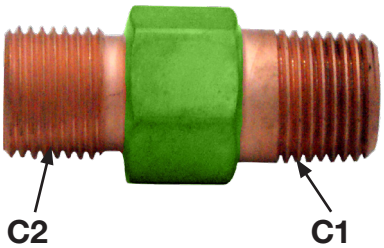

PIPE THREAD FEMALE (NPT FEMALE) TO BRITISH STANDARD PIPE (BSPP) MALE ADAPTERS

Stainless steel.

PART NO.	CONNECTION TYPE		MAX. OPERATING PRESSURE	
	CONNECTION 1	CONNECTION 2	psi	bar
55224	1/2″ NPT Female	G1/2″ BSPP Male	15,000	1034
62253	1/2″ NPT Female	G1″ BSPP Male	15,000	1034

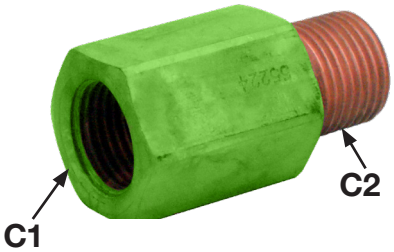

PIPE THREAD MALE (NPT MALE) TO METRIC MALE ADAPTERS

Stainless steel. Copper plated for galling resistance.

PART NO.	CONNECTION TYPE		MAX. OPERATING PRESSURE	
	CONNECTION 1	CONNECTION 2	psi	bar
55094	3/4″ NPT Male	M36 x 2.0 Male	15,000	1034
55093	3/4″ NPT Male	M24 x 1.5 Male	15,000	1034
55092	1/2″ NPT Male	M24 x 1.5 Male	15,000	1034
55091	1/2″ NPT Male	M22 x 1.5 Male	15,000	1034

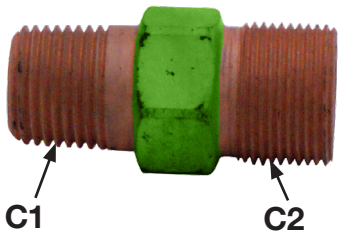

PIPE THREAD FEMALE (NPT FEMALE) TO METRIC MALE ADAPTERS

Stainless steel.

PART NO.	CONNECTION TYPE		MAX. OPERATING PRESSURE	
	CONNECTION 1	CONNECTION 2	psi	bar
55223	1/2″ NPT Female	M24 x 1.5 Male	15,000	1034
55222	1/2″ NPT Female	M22 x 1.5 Male	15,000	1034

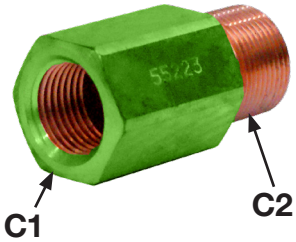

TYPE M MALE CONNECTORS

Stainless steel.

PART NO.	CONNECTION TYPE		MAX. OPERATING PRESSURE	
	CONNECTION 1	CONNECTION 2	psi	bar
29058	1-5/16″ Type M Male	1-5/16″ Type M Male	20,000	1379
29059	1-5/16″ Type M Male	1″ Type M Male	20,000	1379
29060	1-5/16″ Type M Male	3/4″ Type M Male	20,000	1379
29061	1″ Type M Male	1″ Type M Male	20,000	1379
28487	1″ Type M Male	3/4″ Type M Male	20,000	1379
29019	1″ Type M Male	9/16″ Type M Male	20,000	1379
28196	3/4″ Type M Male	3/4″ Type M Male	20,000	1379
29062	3/4″ Type M Male	9/16″ Type M Male	20,000	1379
27527	9/16″ Type M Male	9/16″ Type M Male	40,000	2750

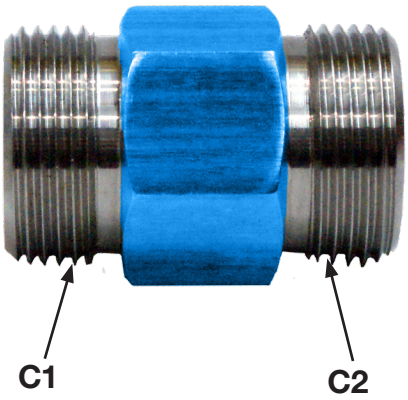

TYPE M MALE TO METRIC MALE ADAPTERS

Stainless steel. Copper plated for galling resistance.

PART NO.	CONNECTION TYPE		MAX. OPERATING PRESSURE	
	CONNECTION 1	CONNECTION 2	psi	bar
66560	1-5/16″ Type M Male	M36 x 2.0 Male	15,000	1034

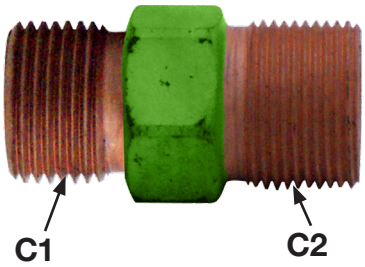

TYPE M MALE TO MEDIUM PRESSURE MALE CONNECTORS

Stainless steel.

PART NO.	CONNECTION TYPE		MAX. OPERATING PRESSURE	
	CONNECTION 1	CONNECTION 2	psi	bar
28330	1-5/16″ Type M Male	1″ MP Male	20,000	1379
28786	1-5/16″ Type M Male	3/4″ MP Male	20,000	1379
28299	1-5/16″ Type M Male	9/16″ MP Male	20,000	1379
28433	1″ Type M Male	1″ MP Male	20,000	1379
28629	1″ Type M Male	3/4″ MP Male	20,000	1379
28631	1″ Type M Male	9/16″ MP Male	20,000	1379
29063	3/4″ Type M Male	1″ MP Male	20,000	1379
29064	3/4″ Type M Male	3/4″ MP Male	20,000	1379
28350	3/4″ Type M Male	9/16″ MP Male	20,000	1379
29065	3/4″ Type M Male	3/8″ MP Male	20,000	1379
29066	9/16″ Type M Male	1″ MP Male	20,000	1379
28804	9/16″ Type M Male	3/4″ MP Male	20,000	1379
28193	9/16″ Type M Male	9/16″ MP Male	20,000	1379
28192	9/16″ Type M Male	3/8″ MP Male	20,000	1379
28328	9/16″ Type M Male	1/4″ MP Male	20,000	1379

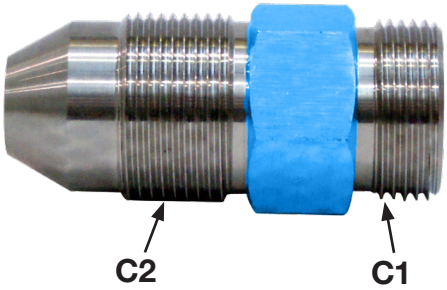

JETSTREAM HF MALE ADAPTERS

The Jetstream HF connection features an easily replaceable seal to prevent wear or damage to the manifold and a large bore to minimize pressure drop through fittings. Stainless steel. Copper plated for galling resistance.

JETSTREAM HF MALE TO PIPE THREAD MALE (NPT) ADAPTERS

PART NO.	CONNECTION TYPE		MAX. OPERATING PRESSURE	
	CONNECTION 1	CONNECTION 2	psi	bar
60953	Jetstream HF Male	3/4″ NPT Male	15,000	1034

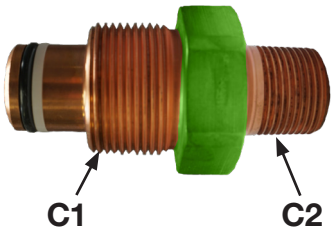

JETSTREAM HF MALE TO TYPE M MALE ADAPTERS

PART NO.	CONNECTION TYPE		MAX. OPERATING PRESSURE	
	CONNECTION 1	CONNECTION 2	psi	bar
60952	Jetstream HF Male	1-5/16″ Type M Male	15,000	1034

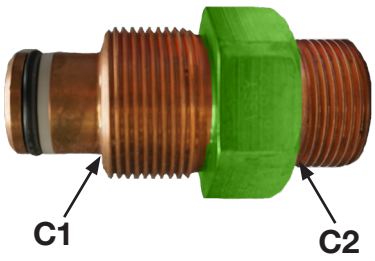

JETSTREAM HF MALE TO FEMALE NPT ADAPTERS

PART NO.	CONNECTION TYPE		MAX. OPERATING PRESSURE	
	CONNECTION 1	CONNECTION 2	psi	bar
60954	Jetstream HF Male	1/2" NPT Female	15,000	1034
63089	Jetstream HF Male	3/4" NPT Female	15,000	1034

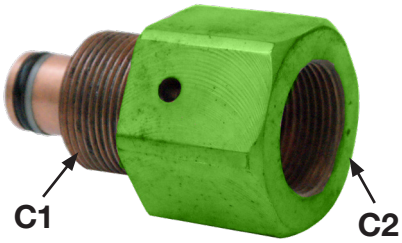

JETSTREAM HF MALE PLUG

PART NO.	CONNECTION TYPE	MAX. OPERATING PRESSURE	
		psi	bar
60951	Jetstream HF Male	15,000	1034

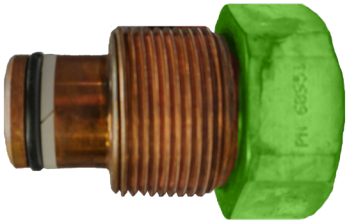

JETSTREAM HF MALE TO METRIC MALE ADAPTER

PART NO.	CONNECTION TYPE		MAX. OPERATING PRESSURE	
	CONNECTION 1	CONNECTION 2	psi	bar
62284	Jetstream HF Male	M36 x 2.0 Male	15,000	1034
63576	Jetstream HF Male	M24 x 1.5 Male	15,000	1034

JETSTREAM HF CLOCKABLE ADAPTER FITTINGS

PART NO.	CONNECTION TYPE		MAX. OPERATING PRESSURE	
	CONNECTION 1	CONNECTION 2	psi	bar
60955	Jetstream HF Male	1/2" NPT Female straight	15,000	1034
61823	Jetstream HF Male	3/4" NPT Female angle	15,000	1034

REPLACEMENT PARTS
Part No. 25238 O-Ring
Part No. 60897 Backup Ring

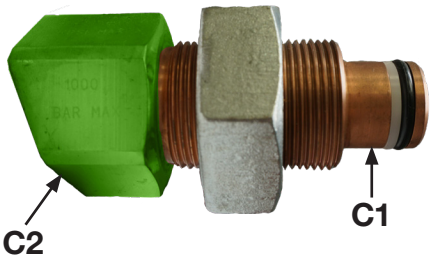

JETSTREAM HHP MALE ADAPTERS

The Jetstream HHP connection features an easily replaceable seal to prevent wear or damage to the manifold and a large bore to minimize pressure drop through fittings. Stainless steel. Copper plated for galling resistance.

JETSTREAM HHP MALE TO PIPE THREAD MALE (NPT) ADAPTERS

PART NO.	CONNECTION TYPE		MAX. OPERATING PRESSURE	
	CONNECTION 1	CONNECTION 2	psi	bar
56861	Jetstream HHP Male	1″ NPT Male	15,000	1034
56863	Jetstream HHP Male	1″ NPT Male	15,000	1034
56862	Jetstream HHP Male	3/4″ NPT Male	15,000	1034

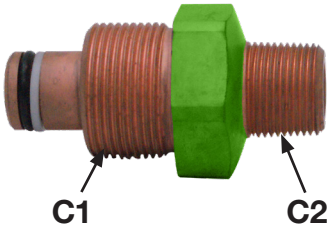

JETSTREAM HHP MALE TO TYPE M MALE ADAPTERS

PART NO.	CONNECTION TYPE		MAX. OPERATING PRESSURE	
	CONNECTION 1	CONNECTION 2	psi	bar
54844	Jetstream HHP Male	1-5/16″ Type M Male	20,000	1379
55296	Jetstream HHP Male	1″ Type M Male	20,000	1379

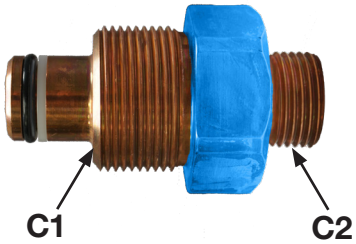

JETSTREAM HHP MALE TO MEDIUM PRESSURE FEMALE ADAPTERS

PART NO.	CONNECTION TYPE		MAX. OPERATING PRESSURE	
	CONNECTION 1	CONNECTION 2	psi	bar
54846	Jetstream HHP Male	1″ MP Female	20,000	1379
62289	Jetstream HHP Male	9/16″ MP Female	20,000	1379

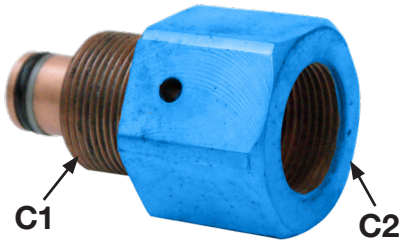

JETSTREAM HHP MALE PLUG

PART NO.	CONNECTION TYPE	MAX. OPERATING PRESSURE	
		psi	bar
54847	Jetstream HHP Male	20,000	1379

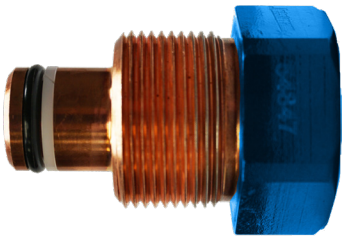

REPLACEMENT PARTS
Part No. 26523 O-Ring
Part No. 54854 Backup Ring

JETSTREAM HHP MALE TO METRIC MALE ADAPTER

PART NO.	CONNECTION TYPE		MAX. OPERATING PRESSURE	
	CONNECTION 1	CONNECTION 2	psi	bar
61503	Jetstream HHP Male	M36 x 2.0 Male	15,000	1034
63575	Jetstream HHP Male	M24 x 1.5 Male	15,000	1034

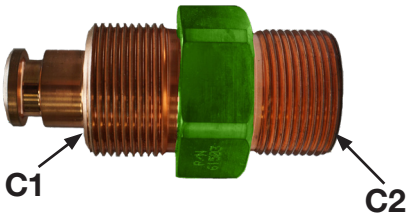

JETSTREAM HHP MALE TO BSPP MALE ADAPTER

PART NO.	CONNECTION TYPE		MAX. OPERATING PRESSURE	
	CONNECTION 1	CONNECTION 2	psi	bar
61322	Jetstream HHP Male	G 3/4" BSPP Male	15,000	1034

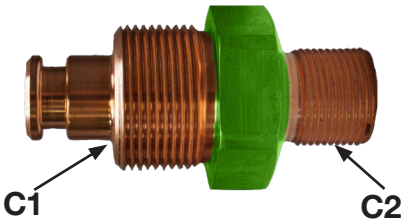

JETSTREAM HHP MALE TO METRIC FEMALE ADAPTER

PART NO.	CONNECTION TYPE		MAX. OPERATING PRESSURE	
	CONNECTION 1	CONNECTION 2	psi	bar
54938	Jetstream HHP Male	.56 Rigid Lance Female	20,000	1379

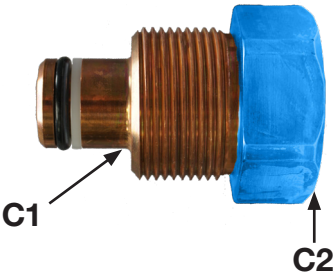

JETSTREAM HHP ADAPTER FITTINGS

PART NO.	CONNECTION TYPE		MAX. OPERATING PRESSURE	
	CONNECTION 1	CONNECTION 2	psi	bar
62288	Jetstream HHP Male	20K PORT FEMALE	20,000	1379

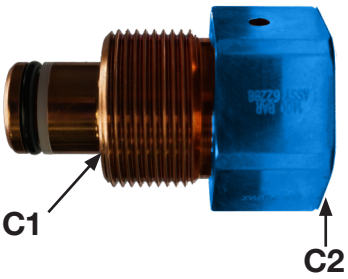

JETSTREAM HHP CLOCKABLE ADAPTER FITTINGS

PART NO.	CONNECTION TYPE		MAX. OPERATING PRESSURE	
	CONNECTION 1	CONNECTION 2	psi	bar
62741	Jetstream HHP Male	3/4" MP Female angled	20,000	1379

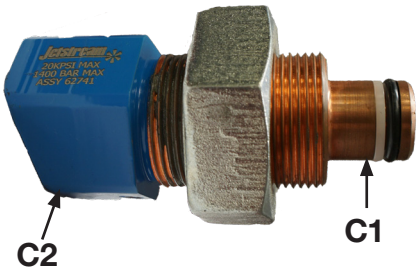

MEDIUM PRESSURE CONNECTIONS

MEDIUM PRESSURE CROSSES

All medium pressure crosses include gland nuts and collars. Stainless steel.

PART NO.	CONNECTION TYPE	MAX. OPERATING PRESSURE	
		psi	bar
28301	1″ MP Female	20,000	1379
29067	3/4″ MP Female	20,000	1379
27969	9/16″ MP Female	20,000	1379
29068	3/8″ MP Female	20,000	1379
29069	1/4″ MP Female	20,000	1379

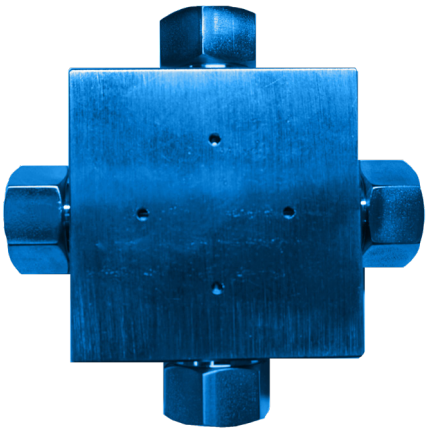

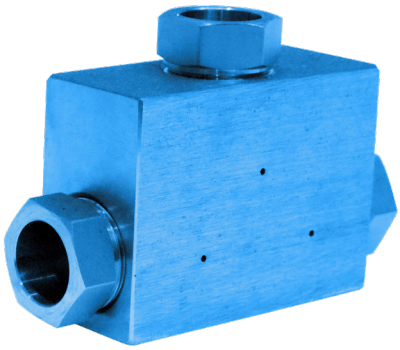

MEDIUM PRESSURE TEES

All medium pressure tees include gland nuts and collars. Stainless steel.

PART NO.	CONNECTION TYPE	MAX. OPERATING PRESSURE	
		psi	bar
29070	1″ MP Female	20,000	1379
29071	3/4″ MP Female	20,000	1379
27966	9/16″ MP Female	20,000	1379
27964	3/8″ MP Female	20,000	1379
29072	1/4″ MP Female	20,000	1379

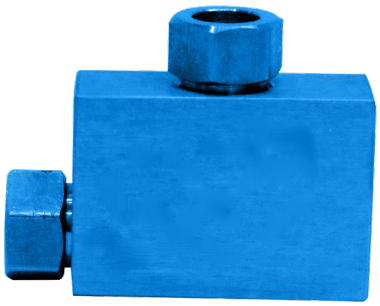

MEDIUM PRESSURE ELBOWS

All medium pressure elbows include gland nuts and collars. Stainless steel.

PART NO.	CONNECTION TYPE	MAX. OPERATING PRESSURE	
		psi	bar
29073	1″ MP Female	20,000	1379
29074	3/4″ MP Female	20,000	1379
28184	9/16″ MP Female	20,000	1379
27997	3/8″ MP Female	20,000	1379
29075	1/4″ MP Female	20,000	1379

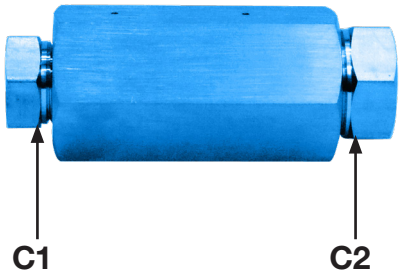

MEDIUM PRESSURE STRAIGHT COUPLINGS

All medium pressure straight couplings include gland nuts and collars. Stainless steel.

PART NO.	CONNECTION TYPE		MAX. OPERATING PRESSURE	
	CONNECTION 1	CONNECTION 2	psi	bar
28341	1″ MP Female	1″ MP Female	20,000	1379
29076	1″ MP Female	3/4″ MP Female	20,000	1379
29077	1″ MP Female	9/16″ MP Female	20,000	1379
28382	3/4″ MP Female	3/4″ MP Female	20,000	1379
29078	3/4″ MP Female	9/16″ MP Female	20,000	1379
29079	3/4″ MP Female	3/8″ MP Female	20,000	1379
27009	9/16″ MP Female	9/16″ MP Female	20,000	1379
28189	9/16″ MP Female	3/8″ MP Female	20,000	1379
28188	9/16″ MP Female	1/4″ MP Female	20,000	1379
28185	3/8″ MP Female	3/8″ MP Female	20,000	1379
28187	3/8″ MP Female	1/4″ MP Female	20,000	1379
29080	1/4″ MP Female	1/4″ MP Female	20,000	1379

MEDIUM PRESSURE UNION COUPLINGS

Union couplings feature a removable seat insert that allows the fitting to slip over one end of the tubing for ease of installation in confined spaces or rigid piping applications. Stainless steel. All medium pressure union couplings include gland nuts and collars.

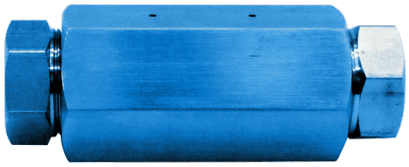

PART NO.	CONNECTION TYPE	MAX. OPERATING PRESSURE	
		psi	bar
29081	1″ MP Female	20,000	1379
29082	3/4″ MP Female	20,000	1379
29083	9/16″ MP Female	20,000	1379
29084	3/8″ MP Female	20,000	1379
29119	1/4″ MP Female	20,000	1379

MEDIUM PRESSURE MALE CONNECTORS

Stainless steel.

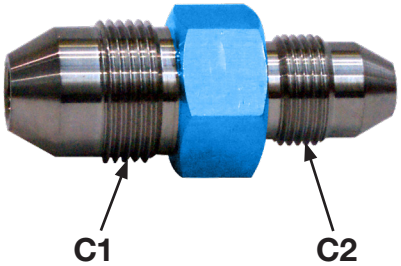

PART NO.	CONNECTION TYPE		MAX. OPERATING PRESSURE	
	CONNECTION 1	CONNECTION 2	psi	bar
29085	1″ MP Male	1″ MP Male	20,000	1379
29086	1″ MP Male	3/4″ MP Male	20,000	1379
29087	1″ MP Male	9/16″ MP Male	20,000	1379
29088	3/4″ MP Male	3/4″ MP Male	20,000	1379
29089	3/4″ MP Male	9/16″ MP Male	20,000	1379
29090	3/4″ MP Male	3/8″ MP Male	20,000	1379
29715	3/4″ MP Male	1/4″ MP Male	20,000	1379
29091	9/16″ MP Male	9/16″ MP Male	20,000	1379
29092	9/16″ MP Male	3/8″ MP Male	20,000	1379
29093	9/16″ MP Male	1/4″ MP Male	20,000	1379
28191	3/8″ MP Male	3/8″ MP Male	20,000	1379
28190	3/8″ MP Male	1/4″ MP Male	20,000	1379
29094	1/4″ MP Male	1/4″ MP Male	20,000	1379

MEDIUM PRESSURE MALE TO MEDIUM PRESSURE FEMALE CONNECTORS

Stainless steel.

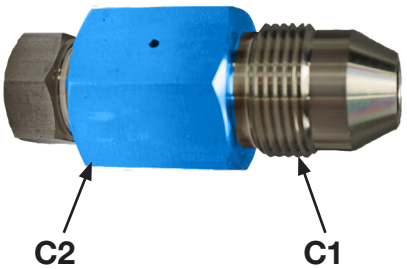

PART NO.	CONNECTION TYPE		MAX. OPERATING PRESSURE	
	CONNECTION 1	CONNECTION 2	psi	bar
29095*	1″ MP Male	3/4″ MP Female	20,000	1379
28797*	1″ MP Male	9/16″ MP Female	20,000	1379
28462*	3/4″ MP Male	9/16″ MP Female	20,000	1379
29096*	3/4″ MP Male	3/8″ MP Female	20,000	1379
28186*	9/16″ MP Male	3/8″ MP Female	20,000	1379
28726*	9/16″ MP Male	1/4″ MP Female	20,000	1379
29097*	3/8″ MP Male	1/4″ MP Female	20,000	1379

*Gland and collar not included, see E-20.

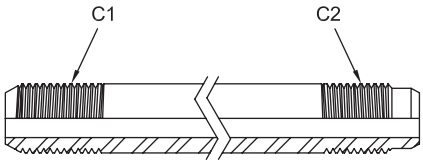

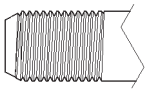

MP Tube LH Connection

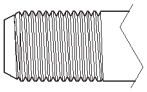

MP Tube RH Connection

MEDIUM PRESSURE NIPPLES

High tensile strength, cold drawn stainless steel. Glands and collars not included.

Left-hand Medium Pressure Tubing (MP Tube LH):
For use in standard medium pressure connections (using glands and collars) or with lance fittings (no glands and collars) or tube nozzles that have medium pressure, left-handed female threads. Available in 1/4″ to 1″ sizes.

Right-hand Medium Pressure Tubing (MP Tube RH):
For use with lance fittings (no glands and collars) or tube nozzles that have medium pressure, right-handed female threads. Available in 1/4″ to 3/4″ sizes.

PART NO.	CONNECTIONS		OUTER DIAMETER		MAX. WORKING PRESSURE		MAX. WORKING PRESSURE	
	CONNECTION 2	CONNECTION 2	in	mm	in	mm	psi	bar
29013-XX	1″ MP Tube LH Male	1″ MP Tube LH Male	.990	25.1	.688	17.5	20,000	1379
29108-XX	3/4″ MP Tube LH Male	3/4″ MP Tube LH Male	.740	18.8	.438	11.1	20,000	1379
29109-XX	3/4″ MP Tube LH Male	3/4″ MP Tube RH Male	.740	18.8	.438	11.1	20,000	1379
29110-XX	3/4″ MP Tube RH Male	3/4″ MP Tube RH Male	.740	18.8	.438	11.1	20,000	1379
27968-XX	9/16″ MP Tube LH Male	9/16″ MP Tube LH Male	.553	14.0	.312	7.9	20,000	1379
54769-XX	9/16″ MP Tube LH Male	9/16″ MP Tube RH Male	.553	14.0	.312	7.9	20,000	1379
54781-XX	9/16″ MP Tube RH Male	9/16″ MP Tube RH Male	.553	14.0	.312	7.9	20,000	1379
27960-XX	3/8″ MP Tube LH Male	3/8″ MP Tube LH Male	.368	9.3	.203	5.2	20,000	1379
54783-XX	3/8″ MP Tube LH Male	3/8″ MP Tube RH Male	.368	9.3	.203	5.2	20,000	1379
54784-XX	3/8″ MP Tube RH Male	3/8″ MP Tube RH Male	.368	9.3	.203	5.2	20,000	1379
54787-XX	1/4″ MP Tube LH Male	1/4″ MP Tube LH Male	.245	6.2	.109	2.8	20,000	1379
54788-XX	1/4″ MP Tube LH Male	1/4″ MP Tube RH Male	.245	6.2	.109	2.8	20,000	1379
54789-XX	1/4″ MP Tube RH Male	1/4″ MP Tube RH Male	.245	6.2	.109	2.8	20,000	1379

Gland Nut

Plug

Collar

MEDIUM PRESSURE GLAND NUTS, COLLARS AND PLUGS

CONNECTION TYPE	REPLACEMENT PART NO.		
	GLAND NUT	COLLAR	PLUG
1″ MP Male	28731	28732	29100
3/4″ MP Male	28383	28384	29101
9/16″ MP Male	26645	26635	27973
3/8″ MP Male	28181	28180	28229
1/4″ MP Male	29098	29099	29102

MEDIUM PRESSURE ANTI-VIBRATION GLAND ASSEMBLIES

Used to reduce stress on tubing threads in conditions where bending or vibration are present, anti-vibration gland assemblies feature a collet that clamps onto the tubing when the connection is tightened to provide extra support and strength.

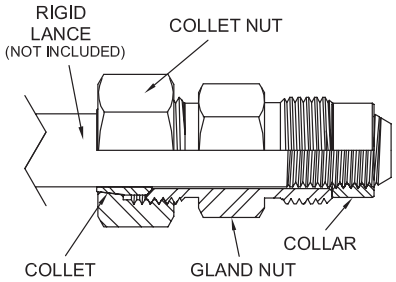

ASSEMBLY PART NO.	CONNECTION TYPE	COLLAR PART NUMBER	GLAND NUT ASSY PART NUMBER
29103	1″ MP Male	28732	61539
29104	3/4″ MP Male	28384	61540
28268	9/16″ MP Male	26635	61541
29105	3/8″ MP Male	28180	61542
29106	1/4″ MP Male	29099	61543

MEDIUM PRESSURE SLIMLINE LANCE COUPLINGS

Used to couple medium pressure rigid and flex lances without the use of glands and collars, allowing them to fit into tubes.

Additional couplings available by request.

PART NO.	CONNECTIONS		OUTER DIAMETER		MAX. WORKING PRESSURE	
	CONNECTION 2	CONNECTION 2	in	mm	psi	bar
28668	9/16″ MP Tube LH Female	9/16″ MP Tube LH Female	.750	19.1	20,000	1379
29111	9/16″ MP Tube LH Female	9/16″ MP Tube RH Female	.750	19.1	20,000	1379
29112	9/16″ MP Tube RH Female	9/16″ MP Tube RH Female	.750	19.1	20,000	1379
28349	9/16″ MP Tube LH Female	3/8″ MP Tube LH Female	.750	19.1	20,000	1379
28314	9/16″ MP Tube RH Female	3/8″ MP Tube RH Female	.750	19.1	20,000	1379
28667	3/8″ MP Tube LH Female	3/8″ MP Tube LH Female	.500	12.7	20,000	1379
29113	3/8″ MP Tube LH Female	3/8″ MP Tube RH Female	.500	12.7	20,000	1379
29114	3/8″ MP Tube RH Female	3/8″ MP Tube RH Female	.500	12.7	20,000	1379
28315	3/8″ MP Tube RH Female	1/4″ MP Tube RH Female	.500	12.7	20,000	1379
28666	1/4″ MP Tube LH Female	1/4″ MP Tube LH Female	.375	9.5	20,000	1379
28700	1/4″ MP Tube LH Female	1/4″ MP Tube RH Female	.375	9.5	20,000	1379
29115	1/4″ MP Tube RH Female	1/4″ MP Tube RH Female	.375	9.5	20,000	1379

CONTROL GUNS

HAND-OPERATED, ZERO-THRUST AND FOOT-OPERATED

Control guns are a necessity in any hand lancing application. Jetstream offers several control gun styles for 15,000 psi waterblasting: Standard and Field-Repairable Hand Guns, Zero-Thrust (or Sub-Sea) Guns and several Foot-operated gun options for various cleaning needs.

DURASAFE™ HAND GUNS
(STANDARD AND FIELD-REPAIRABLE)

Designed with safety, comfort and simplicity in mind, the 15,000 psi control guns are used for a variety of surface cleaning applications. The DCP models feature fully adjustable body pads for maximum operator comfort in any position (shoulder, hip, chest, etc.). The DCPx models showcase an ergonomically designed shoulder stock. In addition to the standard welded guns, Jetstream offers a field repairable option for barrel replacement to be performed in the field. Both standard and field repairable guns are offered in single or dual trigger, dump or shut-in style. All guns are color-coded in green for the 15,000 psi (1034 bar) rating.

ZERO-THRUST GUN

The Zero-Thrust gun is primarily designed for underwater cleaning in a marine environment. Due to no rear thrust, the operator is able to sustain a standard distance from the material needed to be cleaned without being propelled away.

DURASAFE™ FOOT GUNS

The Durasafe foot gun is ideal for numerous tube cleaning applications. A recent upgrade is the larger opening for easier boot clearance and is now standard on all Jetstream foot guns. Both dump or shut-in style come standard in green color for 15,000 psi (1034 bar).

- Fast field replaceable cartridge design for minimal downtime
- All pressure bearing components are stainless steel

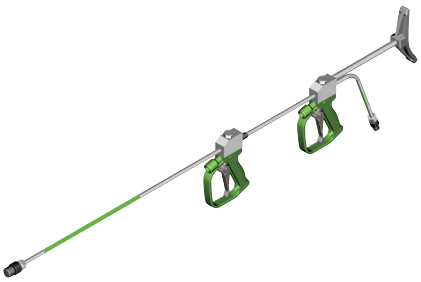

DURASAFE™ HAND GUNS
DUMP STYLE

DuraSafe 15,000 psi hand-operated dump style control guns allow the operator to have complete control of the pressure at all times. Designed with safety, comfort, and simplicity in mind, they are used for a variety of surface cleaning applications and are available in four standard configurations.

- 30-second field replaceable cartridge design for minimal downtime
- 48" distance from primary trigger to end of barrel to ensure maximum operator safety
- Lightweight
- Special cam-operated design cuts required trigger force in half
- DCP models feature fully adjustable body pad for maximum operator comfort in any position (shoulder, hip, chest, etc.), while an ergonomically designed shoulder stock is included with DCPx models
- Adjustable secondary grip included with single trigger models
- Dual trigger models require both triggers to be engaged in order to build system pressure for maximum operator safety
- All pressure-bearing components are stainless steel
- Includes coupling to attach 1/4" NPT Male nozzles (see HHTC Nozzles, page G-36)
- All Jetstream Hand Guns are color-coded green for added safety at 15,000 psi (1034 bar). See parts lists on the following pages for part numbers of replacement decals for the front barrel, rear barrel, and body.

REPLACEMENT CARTRIDGE

All 15,000 psi DuraSafe Dump Style Control Guns utilize the C-15 cartridge, shown above, to completely rebuild the dump valve in about 30 seconds!
Part No. 50902

GUNS

STANDARD, WELDED

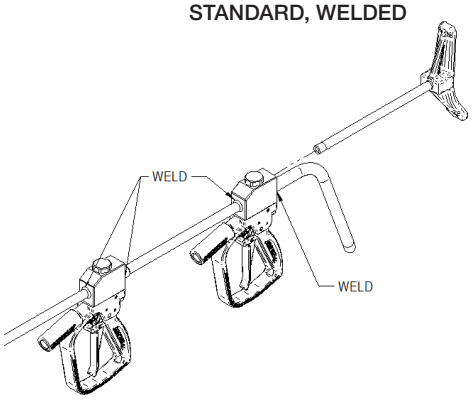

PARTIALLY FIELD REPAIRABLE

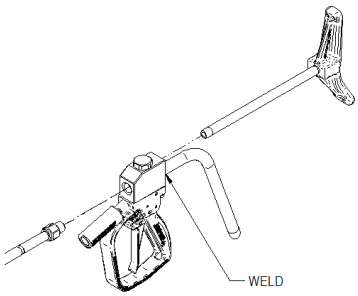

FULLY FIELD REPAIRABLE

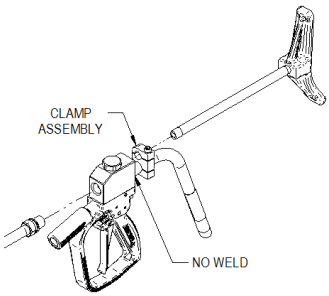

NOTE: The Jetstream PI082 Safety Pamphlet Section 'CONTROL GUNS AND DEVICES' Item 5:
The use of a Safety Shroud and Safety Whip Hose with handheld control guns is strongly recommended for additional operator protection against a burst occuring in the high pressure hose connected to the gun. Use of Hand Grip and Shoulder Stock in hand-held control guns will provide greater operator comfort and safety.

DURASAFE™ HAND GUNS
DUMP STYLE
STANDARD, WELDED GUN

STANDARD, WELDED GUNS									
PART NO.	MODEL	TRIGGER ACTUATION	REST TYPE	INLET CONNECTION*	BARREL SIZE	LENGTH		MAX. OPERATING PRESSURE	
						in	mm	psi	bar
53300	DCP-15	Single	Body Pad	1/2" NPT Male	3/8" NPT	71	1803	15,000	1034
54605	DCPx-15	Single	Shoulder Stock			66	1676	15,000	1034
53225	DCP-15DD	Dual	Body Pad			75	1905	15,000	1034
54415	DCPx-15D	Dual	Shoulder Stock			70	1778	15,000	1034

* Adapters available for other connection types. See details on all connection types in Section I.

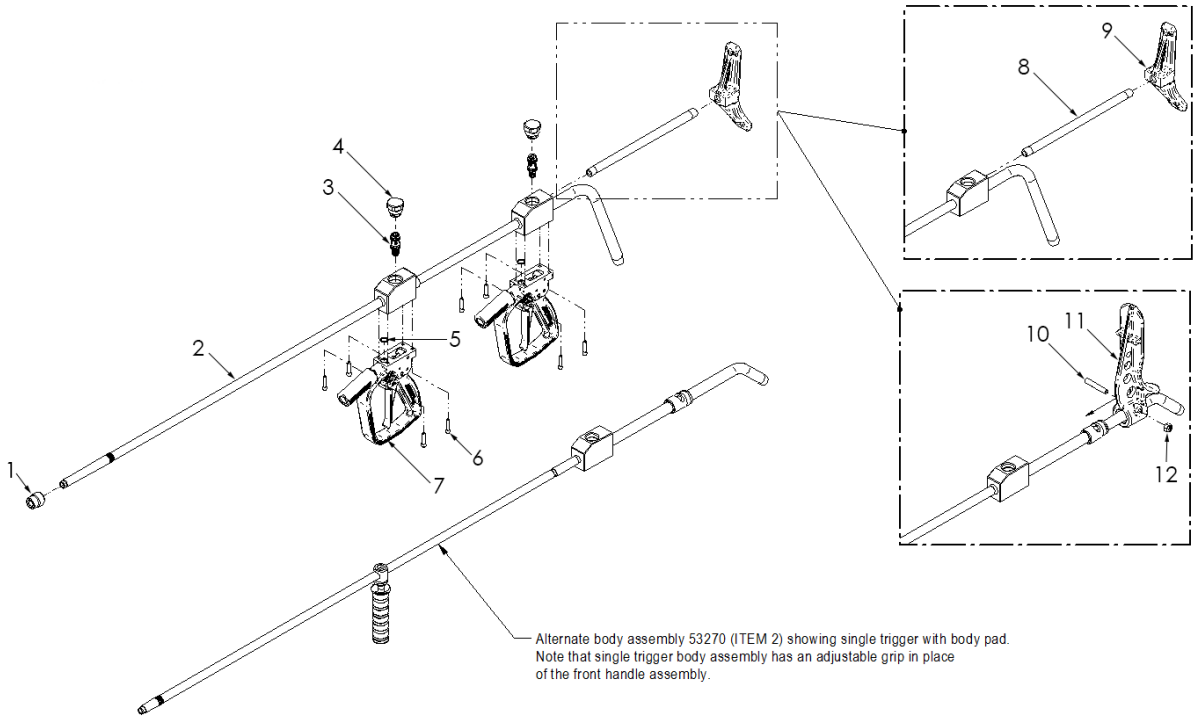

PART BREAKDOWN

ITEM	PART NO.	DESCRIPTION	ITEM	PART NO.	DESCRIPTION
1	26061	Coupling	7	57956-66	Handle Assy, Green
2	53270	Body Assy (DCP-15)	8	50127	Extension, Shoulder Stock (DCPx-15, DCPx-15D)
	54360	Body Assy (DCPx-15)	9	50124	Shoulder Stock (DCPx-15, DCPx-15D)
	53240	Body Assy (DCP-15DD)	10	53303	Stud (DCP-15, DCP-15DD)
	54420	Body Assy (DCPx-15D)	11	53304	Body Pad (DCP-15, DCP-15DD)
3	50902	Cartridge	12	25296	Nut (DCP-15, DCP-15DD)
4	53175	Plug	13*	65998	Decal, Front Barrel, Green
5	25193	O-Ring	14*	64266	Decal, Rear Barrel, Green
6	26689	Capscrew	15*	70742	Decal, Body Green

* Not shown.

DURASAFE™ HAND GUNS
DUMP STYLE
PARTIALLY FIELD REPAIRABLE GUN

PARTIALLY FIELD REPAIRABLE GUNS									
PART NO.	MODEL	TRIGGER ACTUATION	REST TYPE	INLET CONNECTION*	BARREL SIZE	LENGTH		MAX. OPERATING PRESURE	
						in	mm	psi	bar
53345	DCP-15	Single	Body Pad	1/2" NPT Male	1/2" NPT	66	1676	15,000	1034
54900	DCPx-15	Single	Shoulder Stock		3/8" NPT	67	1702	15,000	1034

* Adapters available for other connection types. See details on all connection types in Section I.

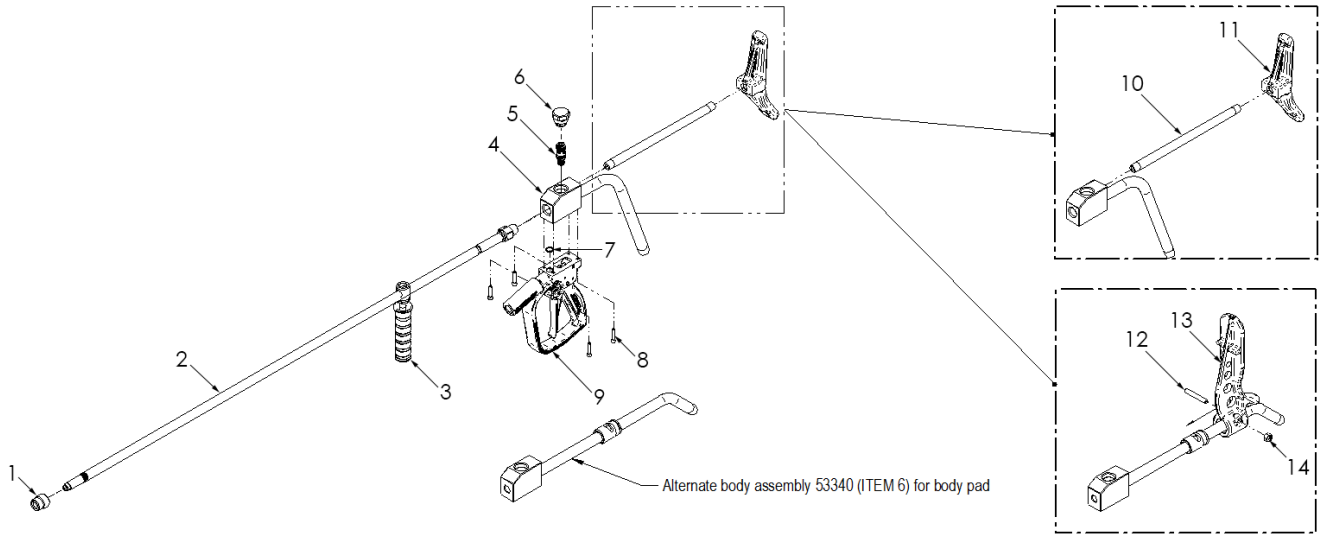

PART BREAKDOWN

ITEM	PART NO.	DESCRIPTION	ITEM	PART NO.	DESCRIPTION
1	26061	Coupling	9	57956-66	Handle Assy, Green
2	51973	Barrel, Front	10	50127	Extension, Shoulder Stock
3	52198	Grip Assy	11	50124	Shoulder Stock (DCPx-15)
4	53340	Body Assy (DCP-15)	12	53303	Stud (DCP-15)
	54705	Body Assy (DCPx-15)	13	53304	Body Pad (DCP-15)
5	50902	Cartridge	14	25296	Nut (DCP-15)
6	53175	Plug	15*	65998	Decal, Front Barrel, Green
7	25193	O-Ring	16*	64266	Decal, Rear Barrel, Green
8	26689	Capscrew	17*	70742	Decal, Body Green

* Not shown.

DURASAFE™ HAND GUNS
DUMP STYLE
FIELD REPAIRABLE, SINGLE TRIGGER GUN

FULLY FIELD REPAIRABLE, SINGLE TRIGGER GUNS									
PART NO.	MODEL	TRIGGER ACTUATION	REST TYPE	INLET CONNECTION*	BARREL SIZE	LENGTH		MAX. OPERATING PRESURE	
						in	mm	psi	bar
65745	FR-15SD	Single	Shoulder Stock	1/2" NPT Male	3/8" NPT	67	1702	15,000	1034
65739	FR-15SD	Single	Shoulder Stock		1/2" NPT	66	1676	15,000	1034

* Adapters available for other connection types. See details on all connection types in Section I.

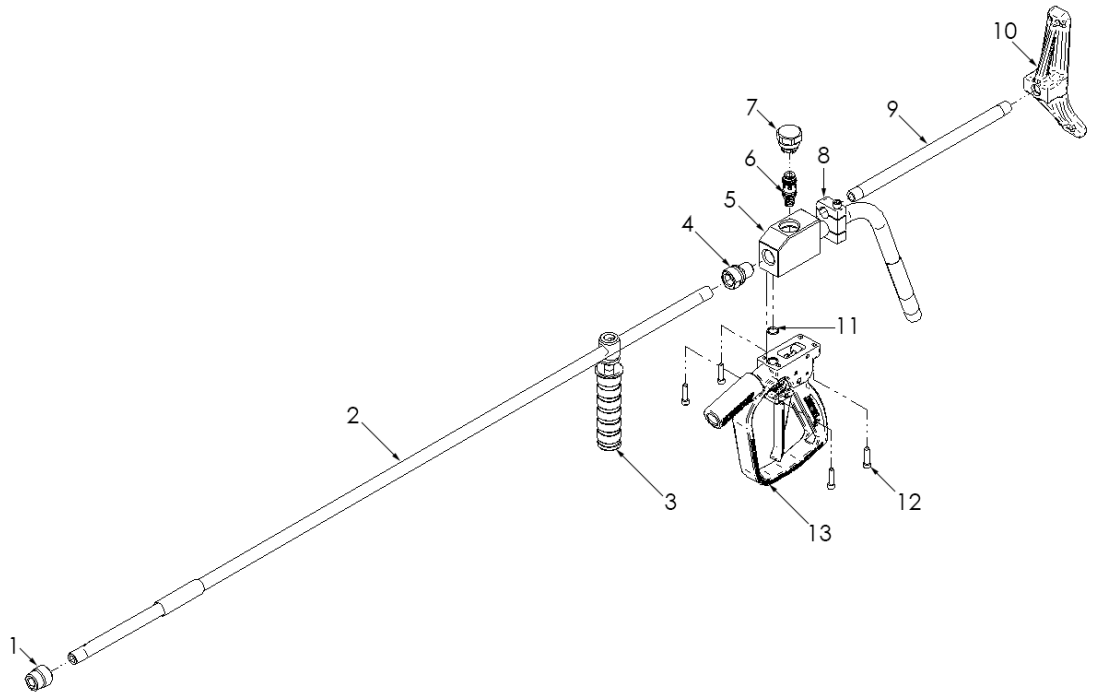

PART BREAKDOWN

ITEM	PART NO.	DESCRIPTION	ITEM	PART NO.	DESCRIPTION
1	26061	Coupling (FR-15SD)	8	61880	Clamp
	50342	Coupling (FR-15SD)	9	50127	Extension, Shoulder Stock
2	51098-48	Barrel, Front (FR-15SD)	10	50124	Shoulder Stock
	55450-48	Barrel, Front (FR-15SD)	11	25193	O-Ring
3	52198	Grip Assy (FR-15SD)	12	26689	Capscrew
	04210	Grip Assy (FR-15SD)	13	57956-66	Handle Assy, Green
4	26062	Bushing (FR-15SD)	14*	65998	Decal, Front Barrel, Green
5	65741	Body Assy, DCP-15	15*	64266	Decal, Rear Barrel, Green
6	50902	Cartridge	16*	70742	Decal, Body Green
7	53175	Plug			

* Not shown.

DURASAFE™ HAND GUNS
DUMP STYLE
FIELD REPAIRABLE, DUAL TRIGGER GUNS

FULLY FIELD REPAIRABLE, DUAL TRIGGER GUNS									
PART NO.	MODEL	TRIGGER ACTUATION	REST TYPE	INLET CONNECTION*	BARREL SIZE	LENGTH		MAX. OPERATING PRESURE	
						in	mm	psi	bar
65746	FR-15DD	Dual	Shoulder Stock	1/2" NPT Male	3/8" NPT	78	1981	15,000	1034
65740	FR-15DD	Dual	Shoulder Stock		1/2" NPT	77	1956	15,000	1034

* Adapters available for other connection types. See details on all connection types in Section I.

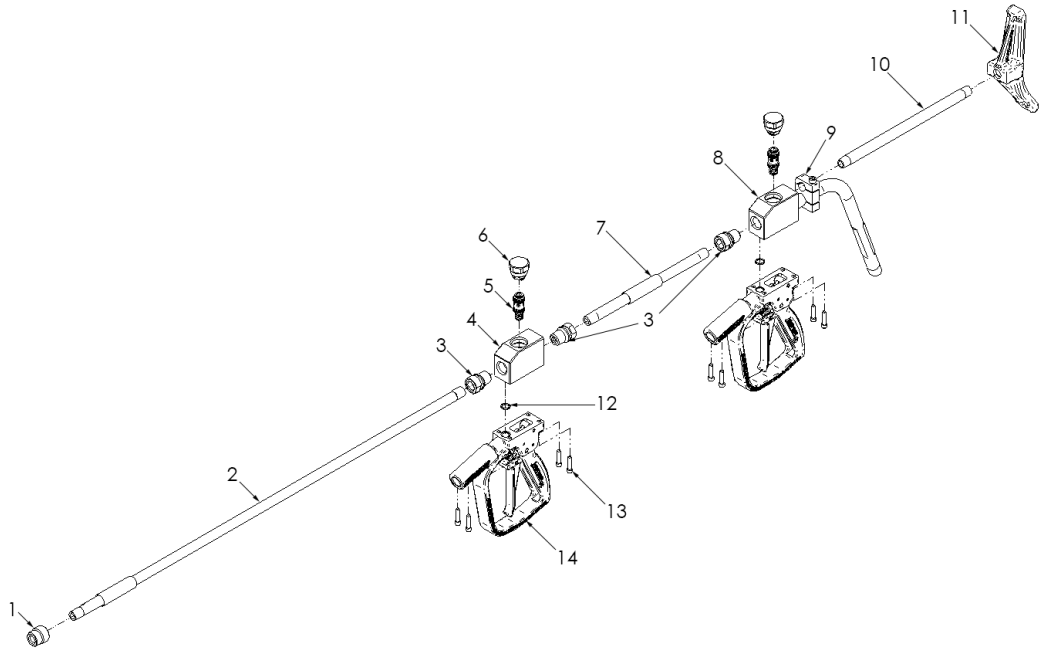

PART BREAKDOWN

ITEM	PART NO.	DESCRIPTION	ITEM	PART NO.	DESCRIPTION
1	26061	Coupling (FR-15DD)	8	65741	Body Assy. DCP-15
	50342	Coupling (FR-15DD)	9	61880	Clamp
2	51098-36	Barrel, Front (FR-15DD)	10	50127	Extension, Shoulder Stock
	55450-36	Barrel, Front (FR-15DD)	11	50124	Shoulder Stock
3	26062	Bushing (FR-15DD)	12	25193	O-Ring
4	55497	Body, DCP-15	13	26689	Capscrew
5	50902	Cartridge	14	57956-66	Handle Assy, Green
6	53175	Plug	15*	65998	Decal, Front Barrel, Green
7	51098-11	Nipple (FR-15DD)	16*	64266	Decal, Rear Barrel, Green
	55450-11	Nipple (FR-15DD)	17*	70742	Decal, Body Green

* Not shown.

DURASAFE™ HAND GUNS
SHUT-IN STYLE

DuraSafe 15,000 psi hand-operated shut-in style control guns allow the operator to have complete control of the pressure at all times. Designed with safety, comfort, and simplicity in mind, they are used for a variety of surface cleaning applications and are available in two standard configurations.

- Shut-in style control guns do not dump water when the trigger is released. Useful in applications where excess water spillage and disposal are concerns. Use with plunger style pumps, such as the UNx®, requires the installation of a Shut-In Regulator Valve (see page C-18).
- 30-second field replaceable cartridge design for minimal downtime
- 48″ distance primary trigger to end of barrel to ensure maximum operator safety
- All Jetstream Hand Guns are color-coded green for added safety at 15,000 psi (1,034 bar)
- Special cam-operated design cuts required trigger force in half
- DCPSi model features a fully adjustable body pad for maximum operator comfort in any position (shoulder, hip, chest, etc.)
- DCPxSi model includes an ergonomically designed shoulder stock
- Adjustable secondary hand grip
- All pressure-bearing components are stainless steel
- Includes coupling to attach 1/4″ NPT Male nozzles (see HHTC Nozzles, page G-36)

REPLACEMENT CARTRIDGE

15,000 psi DuraSafe Shut-in Style Control Guns utilize the CPSi-15 cartridge, shown above, to completely rebuild the gun in about 30 seconds! **Part No. 60419**

GUNS

PART NO.	MODEL	TRIGGER ACTUATION	REST TYPE	INLET CONNECTION*	BARREL SIZE	LENGTH		MAX. OPERATING PRESSURE	
						in	mm	psi	bar
STANDARD, WELDED GUN									
54445	DCPxSI-15	Single	Shoulder Stock	1/2" NPT Male	3/8" NPT	70	1778	15,000	1034
54330	DCPSI-15	Single	Body Pad	1/2" NPT Male	3/8" NPT	67	1702	15,000	1034
FULLY FIELD REPAIRABLE GUN									
65747	FR-15SI	Single	Body Pad	1/2" NPT Male	3/8" NPT	65	1651	15,000	1034

*Adapters available for other connection types. See details on all connection types in Section I.

NOTE: The Jetstream PI082 Safety Pamphlet Section 'CONTROL GUNS AND DEVICES' Item 5:
The use of a Safety Shroud and Safety Whip Hose with handheld control guns is strongly recommended for additional operator protection against a burst occuring in the high pressure hose connected to the gun. User of Hand Grip and Shoulder Stock in hand-held control guns will provide greater operator comfort and safety.

DURASAFE™ HAND GUNS
SHUT-IN STYLE
STANDARD, WELDED GUN

STANDARD, WELDED GUNS									
PART NO.	MODEL	TRIGGER ACTUATION	REST TYPE	INLET CONNECTION*	BARREL SIZE	LENGTH		MAX. OPERATING PRESSURE	
						in	mm	psi	bar
54445	DCPxSI-15	Single	Shoulder Stock	1/2" NPT Male	3/8" NPT	70	1778	15,000	1034
54330	DCPSI-15	Single	Body Pad	1/2" NPT Male	3/8" NPT	67	1702	15,000	1034

*Adapters available for other connection types. See details on all connection types in Section I.

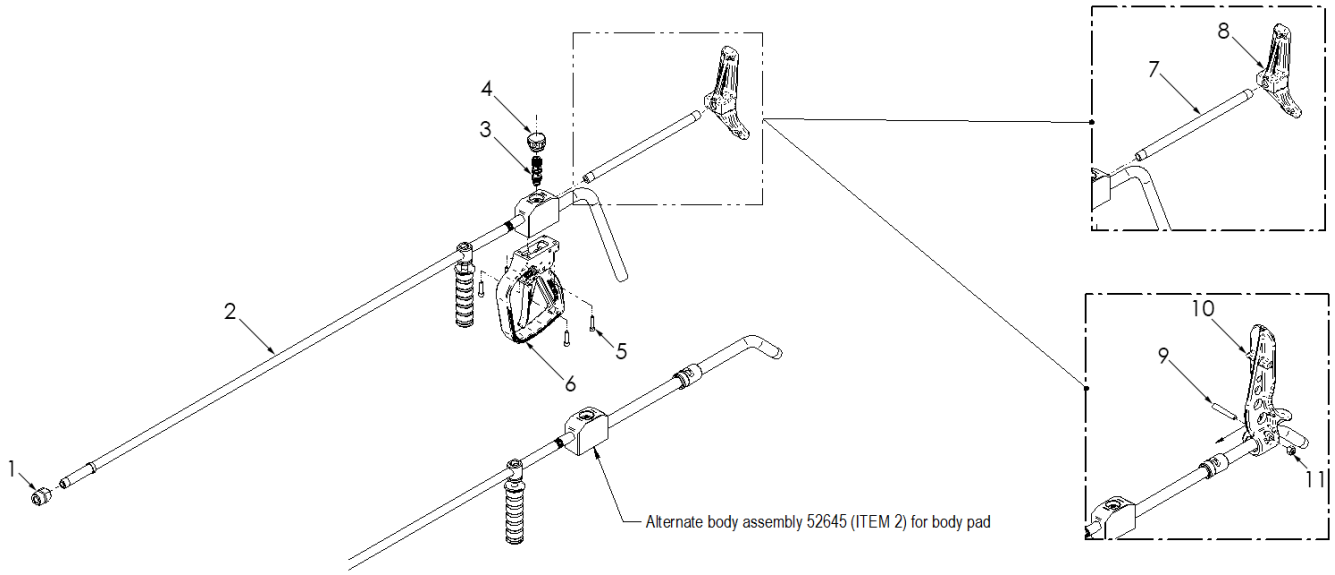

PART BREAKDOWN

ITEM	PART NO.	DESCRIPTION	ITEM	PART NO.	DESCRIPTION
1	26061	Coupling	8	50124	Shoulder Stock (DCPxSI-15)
2	54450	Body Assy (DCPxSI-15)	9	53303	Stud (DCPSI-15)
	52645	Body Assy (DCPSI-15)	10	53304	Body Pad (DCPSI-15)
3	60419	Cartridge	11	25296	Nut (DCPSI-15)
4	52543	Plug	12*	65998	Decal, Front Barrel, Green
5	26689	Capscrew	13*	64266	Decal, Rear Barrel, Green
6	57986-66	Handle Assy, Green	14*	70742	Decal, Body Green
7	50127	Extension, Shoulder Stock (DCPxSI-15)			

* Not shown.

DURASAFE™ HAND GUNS
SHUT-IN STYLE
FIELD REPAIRABLE GUN

FULLY FIELD REPAIRABLE GUN									
PART NO.	MODEL	TRIGGER ACTUATION	REST TYPE	INLET CONNECTION*	BARREL SIZE	LENGTH		MAX. OPERATING PRESSURE	
						in	mm	psi	bar
65747	FR-15SI	Single	Shoulder Stock	1/2" NPT Male	3/8" NPT	65	1651	15,000	1034

*Adapters available for other connection types. See details on all connection types in Section I.

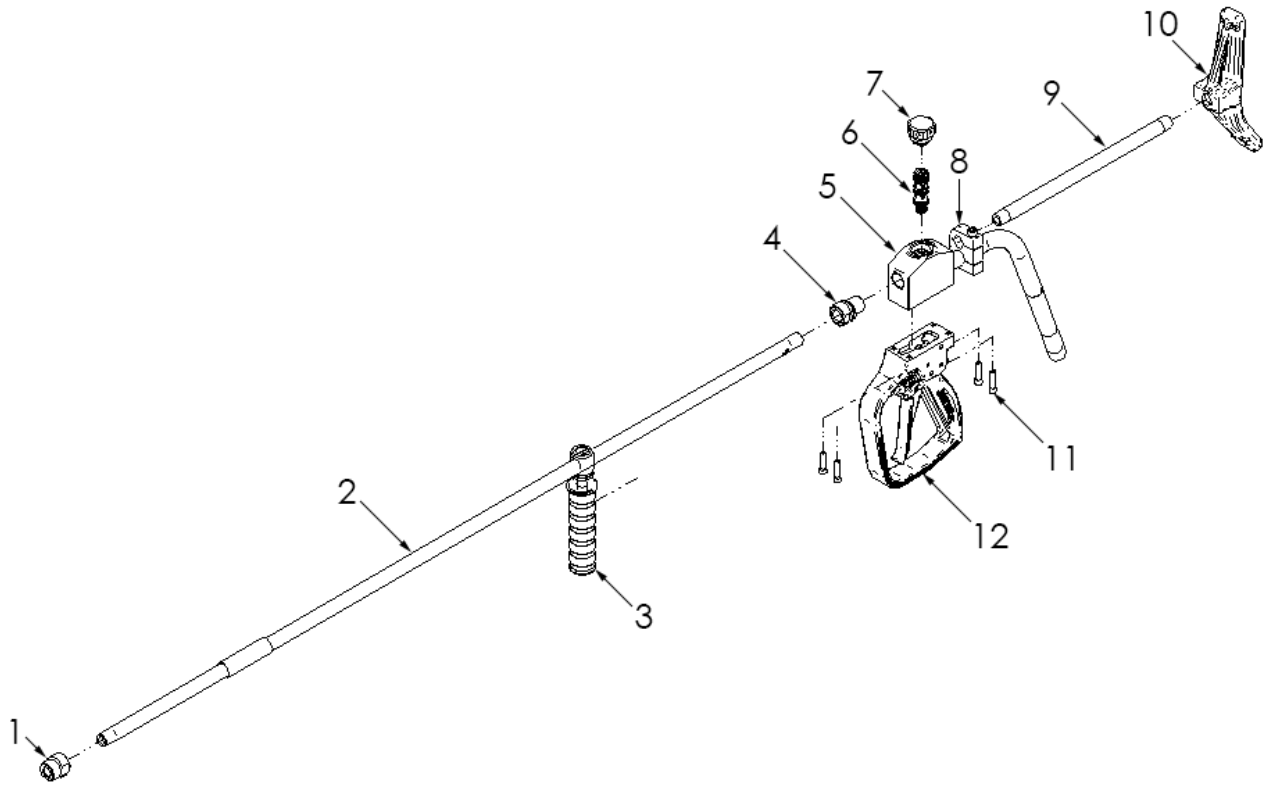

PART BREAKDOWN

ITEM	PART NO.	DESCRIPTION	ITEM	PART NO.	DESCRIPTION
1	26061	Coupling	9	50127	Extension, Shoulder Stock
2	59880	Barrel, Front	10	50124	Shoulder Stock
3	52198	Grip Assy	11	26689	Capscrew
4	26062	Bushing	12	57986-66	Handle Assy, Green
5	65742	Body Assy	13*	65998	Decal, Front Barrel, Green
6	60419	Cartridge	14*	64266	Decal, Rear Barrel, Green
7	52543	Plug	15*	70742	Decal, Body Green
8	62055	Clamp			

* Not shown.

ZERO-THRUST HAND GUNS

The Zero-Thrust gun is primarily designed for underwater cleaning in a marine environment. The gun uses two 1/4" nozzles, one facing forward and one installed in the rear adapter (item 9), to neutralize thrust. Due to no thrust, the operator is able to sustain a standard distance from the material needed to be cleaned without being propelled away. **Part no. 57066**

FULLY FIELD REPAIRABLE GUN									
PART NO.	MODEL	TRIGGER ACTUATION	REST TYPE	INLET CONNECTION*	BARREL SIZE	LENGTH		MAX. OPERATING PRESSURE	
						in	mm	psi	bar
57066	ZT-15	Single	None	1/2" NPT Male	3/8" NPT	85	2159	15,000	1034

*Adapters available for other connection types. See details on all connection types in Section I.

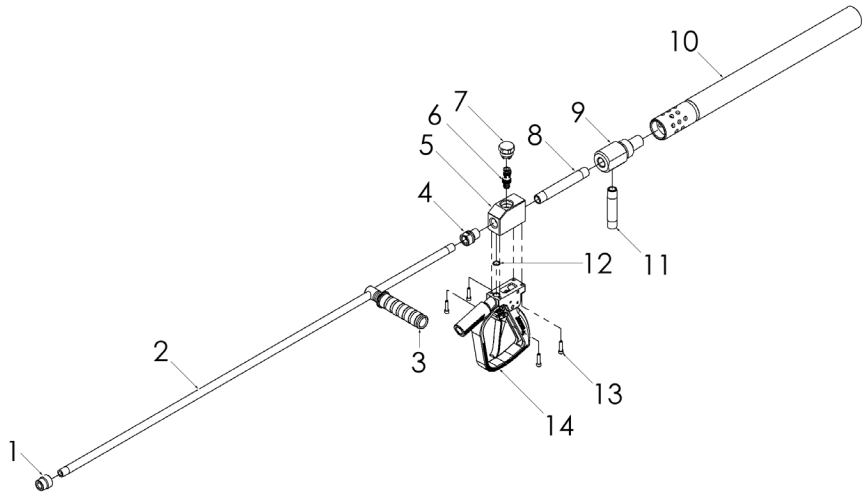

REPLACEMENT CARTRIDGE

Zero Thrust Hand Gun utilizes a cartridge, shown above, to completely rebuild in about 30 seconds. **Part No. 50902**

PART BREAKDOWN

ITEM	PART NO.	DESCRIPTION	ITEM	PART NO.	DESCRIPTION
1	26061	Coupling	10	50511	Baffle Tube
2	51098-48	Nipple, Front Barrel	11	55450-04	Nipple
3	52198	Grip Adjuster	12	25193	O-Ring
4	26062	Bushing	13	26689	Capscrew
5	55497	Body	14	57956	Handle Assy
6	50902	Cartridge	15*	65998	Decal, Front Barrel, Green
7	53175	Plug	16*	64266	Decal, Rear Barrel, Green
8	55450-06	Nipple	17*	70742	Decal, Body Green
9	57076	Adapter, Baffle Tube			

* Not shown.

NOTE: The Jetstream PI082 Safety Pamphlet Section 'CONTROL GUNS AND DEVICES' Item 5:
The use of a Safety Shroud and Safety Whip Hose with handheld control guns is strongly recommended for additional operator protection against a burst occuring in the high pressure hose connected to the gun. User of Hand Grip and Shoulder Stock in hand-held control guns will provide greater operator comfort and safety.

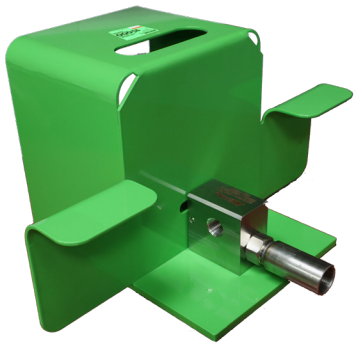

DURASAFE™ FOOT GUNS
DUMP STYLE

Ideal for a variety of waterblast tube cleaning applications, the DuraSafe family of foot-operated dump style control guns allow the operator to have complete control of the pressure at all times.

- 30-second field replaceable cartridge design for minimal downtime
- Safest foot valves in the industry! Custom safety cage and thick blast wall protect operator better than any foot control gun in the industry
- Pipe threaded (NPT) inlet and outlet
- Built-in “wings” protect high pressure hoses and fittings from external damage
- All pressure-bearing components precision machined stainless steel
- Threaded diffuser to route dump water for collection or disposal
- All Jetstream Foot Guns are color-coded green for added safety at 15,000 psi (1034 bar)

PART NO.	MODEL	INLET & OUTLET CONNECTION*	DiFFUSER OUTLET CONNECTION	MAXIMUM FLOW		DIMENSIONS (H X W X D)		MAX. OPERATING PRESSURE	
				gpm	lpm	in	mm	psi	bar
55435	DCF-15-1/2″	1/2″ NPT Female	3/4″ NPT Female	35	130	7.9 x 14.8 x 13.3	200 x 375 x 338	15,000	1034
59374	DCF-15-3/4″	3/4″ NPT Female	1″ NPT Female	75	285	7.9 x 14.8 x 13.5	200 x 375 x 343	15,000	1034
59376	DCF-15-1″	1″ NPT Female	1-1/4″ NPT Female	125	475	7.9 x 14.8 x 15.5	200 x 375 x 393	15,000	1034

REPLACEMENT CARTRIDGE

All 15,000 psi DuraSafe Dump Style Control Guns utilize the C-15 cartridge, shown above, to completely rebuild the dump valve in about 30 seconds! **Part No. 50902**

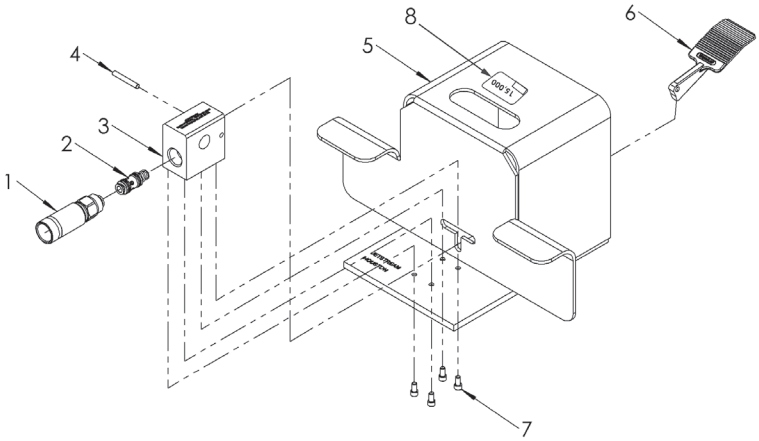

PART BREAKDOWN

ITEM	PART NO.	DESCRIPTION	ITEM	PART NO.	DESCRIPTION
1	50460	Diffuser (DCF-15-1/2″)	3	53368	Body (DCF-15-1/2″)
	51638	Diffuser (DCF-15-3/4″)		53549	Body (DCF-15-3/4″)
	53959	Diffuser (DCF-15-1″)		53954	Body (DCF-15-1″)
2	50902	C-15 Cartridge (DCF-15-1/2″)	4	26453	Pin
	52750	C-15 Mag Cartridge (DCF-15-3/4″)	5	55432	Base
	53915	C-15-1″ Cartridge (DCF-15-1″)	6	53373	Pedal
			7	25261	Capscrew
			8	66114	Decal, 15K, VSS

*See details on all connection types in Section I.

DURASAFE™ FOOT GUNS
SHUT-IN STYLE

Ideal for a variety of waterblast tube cleaning applications, the DCFSi-15 DuraSafe foot-operated shut-in style control gun allows the operator to have complete control of the pressure at all times.

- Shut-in style control guns do not dump water when the trigger is released. Useful in applications where excess water spillage and disposal are concerns. Use with plunger style pumps such as the UNx® require the installation of a Shut-In Regulator Valve (see page C-18)
- 30-second field replaceable cartridge design for minimal downtime
- Safest shut-in foot valve in the industry! Custom safety cage and thick blast wall protect operator better than any foot control gun in the industry
- Pipe threaded (NPT) inlet and outlet
- Built-in “wings” protect high pressure and fittings from external damage
- All pressure-bearing components precision machined stainless steel

PART NO.	MODEL	INLET & OUTLET CONNECTION*	MAXIMUM FLOW		DIMENSIONS (H X W X D)		MAX. OPERATING PRESSURE	
			gpm	lpm	in	mm	psi	bar
59377	DCFSi-15	1/2″ NPT Female	35	130	7.9 x 14.8 x 11.3	200 x 375 x 286	15,000	1034

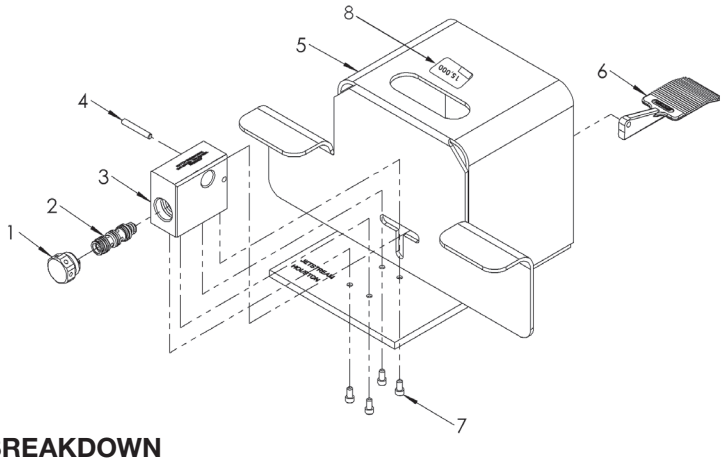

REPLACEMENT CARTRIDGE

15,000 psi DuraSafe Shut-in Style Control Guns utilize the CPSi-15 cartridge, shown above, to completely rebuild the gun in about 30 seconds! **Part No. 60419**

PART BREAKDOWN

ITEM	PART NO.	DESCRIPTION	ITEM	PART NO.	DESCRIPTION
1	52543	Cartridge Plug	5	55432	Base
2	60419	CPSi-15 Cartridge	6	53373	Pedal
3	53374	Body	7	25261	Capscrew
4	26453	Pin	8	66114	Decal, 15K, VSS

*See details on all connection types in Section I.

ROTARY, STRAIGHT, PIPE & TUBE CLEANING TOOLS & NOZZLES

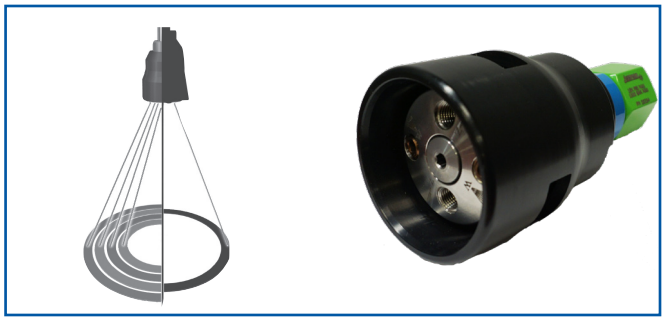

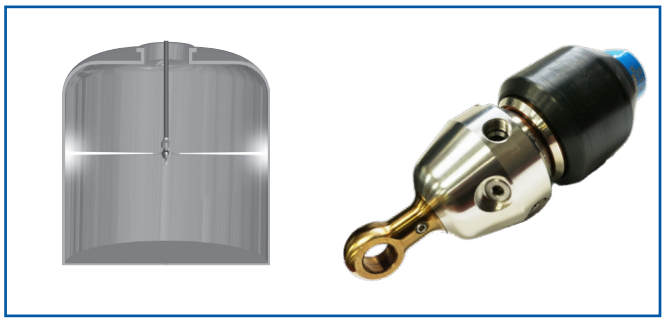

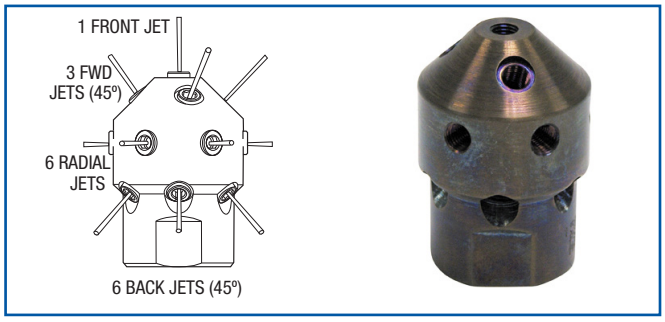

Jetstream provides tools for different 15,000 psi applications in surface preparation, pipe cleaning and tube cleaning. All of our tools are made of stainless steel, hardened steel, or tungsten carbide and treated to withstand high pressures.

The Orbi-Jet™ X22 is a self-powered rotating tool that utilizes up to four rotating jets. The four-jet tool can use either four or two nozzles. and includes a magnetic braking system for maximum control. There is minimal wear for longer run-time hours. Maintenance is made easy through a rebuild kit.

Replacement nozzle tips are available in various connection sizes and orifice materials.

Pipe cleaning tools adapt to various diameter pipes. Our RotoMag™ X22 is a self-powered rotating, eight port tool designed specifically for larger diameter pipes. For smaller pipes, two static nozzles are available with up to sixteen ports.

Jetstream J-Force™ two- and four-inch rotating tools are self-powered with nozzles designed to easily navigate and clean two-inch and four-inch pipes with bends.

Tube cleaning nozzles are drilled for each order and are designed for use at the end of a flex lance or rigid lance. The configurations and flow ratings are customized to each specific request per the job requirements. Jetstream has put together eighteen standard patterns; however, these can be drilled in any pattern requested, once deemed the nozzle will perform efficiently. These drilled nozzles can also be enhanced with the additions of a tube spinner and thruster.

NOTE: Jetstream is an authorized reseller for many vendors and offers specialized rotary, abrasive cutting surface preparation, pipe and tube cleaning nozzles upon request.

Orbi-Jet X22 shown with Twis-Lok shroud and optional 15K adapter.

Premium Kit (Part No. 63305).

ORBI-JET™ X22
FOUR-JET SELF-ROTATING SURFACE CLEANING TOOL

The Jetstream Orbi-Jet X22 is a rugged, self-powered, rotating tool utilizing up to four compound angle, hard-hitting, replaceable nozzles, rated up to 22,000 psi. The tool rotates in multiple 360° user-selectable patterns to provide maximum surface coverage and superior cleaning.

- Each of the four powerful, compound-angle, rotating jets follows a different cleaning path to provide greater coverage and less streaking.
- Three tools in one: use two nozzles for a narrow path, two nozzles for a wide path, or all four nozzles for a complete clean
- Magnetic braking system controls rotational speed for minimal wear and maximum impact without streaking.
- Jetstream light-weight, Twis-Lok™ shroud protects the tool from damage during operation and provides safer water displacement.
- Rebuild kit allows seven minute overhaul of wear components right in the field using two standard hex wrenches.
- Use with **Tungsten Carbide OX Series and Sapphire UHPX/UHPXi Series** nozzles
- **Premium Kit (PN. 63306**) and **Starter Kit (PN. 63230)** available for full product tools. **15K Adapter** (**PN. 28386**) included in Premium & 15K Kit (shown below). **Note:** The Starter kit does NOT come with the adapter.

PART NO.	INLET CONNECTION*	SPEED RANGE	DIAMETER (LESS SHROUD)		ASSEMBLY LENGTH (WITH ADAPTER)		ASSEMBLY WEIGHT		MAX. FLOW RATE (HAND GUN)		MAX. OPERATING PRESSURE**	
		RPM	in	mm	in	mm	lbs	kg	gpm	lpm	psi	bar
63230	3/8" NPT Female	1000-1500	2.0	51	4.0	102	2.1	0.95	7.5	28.4	15,000	1034

*Inlet connection on the tool is 9/16" MP; inlet listed is with the adapter that is included in the part numbers shown.
**Without 15K Adapter, Orbi-Jet X22 max pressure is 22,000 psi (1500 bar).

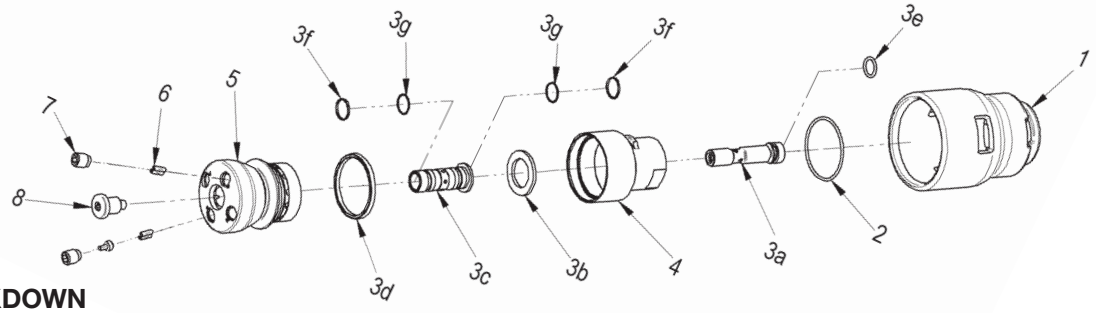

PART BREAKDOWN

ITEM	PART NO.	DESCRIPTION	ITEM	PART NO.	DESCRIPTION
1	63202	Twis-Lok Shroud	6	26871	Straightening Vane
2	63304	Shroud O-Ring	7	UHPX-PLUG	Plug
3	52305	Rebuild Kit (Items 3a to 3g)	8	54276	Retaining Screw
4	63207	Body	9*	28386	15K Adapter
5	54277	Rotor	10*	63302	Maintenance Kit

*Not shown.

ORBI-JET™ X22 NOZZLES

OX SERIES CARBIDE NOZZLES

- High productivity carbide nozzles designed for use in the Orbi-Jet X22 tool
- Specially engineered carbide orifices provide the most aggressive waterjets available
- Efficient design reduces turbulence and orifice wear
- Select nozzles from the charts below by choosing operating pressure, desired flow, and two or four nozzle operation

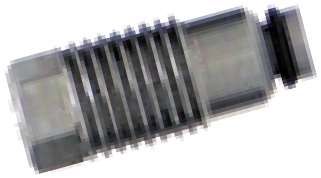

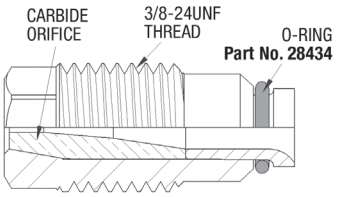

FOUR OX NOZZLES

PART NO.*	ORIFICE DIAMETER		6,000 psi (413 bar)		8,000 psi (551 bar)		10,000 psi (689 bar)		12,000 psi (827 bar)		15,000 psi (1,034 bar)	
	in	mm	gpm	lpm	gpm	lpm	gpm	lpm	gpm	lpm	gpm	lpm
OX-018	.018	.46	3.4	12.8	3.8	14.3	4.0	15.0	4.4	16.5	4.7	17.9
OX-025	.025	.64	6.0	22.7	6.9	26.1	7.1	26.9	7.9	29.8	8.6	32.4
OX-029	.029	.74	8.0	30.2	9.1	34.4	9.5	35.8	10.5	39.8	11.5	43.4
OX-033	.033	.84	10.0	37.8	11.5	43.5	11.9	45.1	13.3	50.2	14.5	54.8
OX-038	.038	.97	13.1	49.5	15.1	57.1	15.6	59.1	17.4	65.8	19.0	71.9
OX-042	.042	1.07	15.9	60.2	18.3	83.2	20.4	77.2	22.2	84.0	24.8	93.9
OX-046	.046	1.17	19.0	71.9	21.8	99.1	24.3	91.9	26.6	100.7	29.6	112.0

TWO OX NOZZLES

OX-018	.018	.46	1.4	5.3	1.6	6.0	1.8	6.8	2.0	7.5	2.2	8.3
OX-025	.025	.64	2.7	10.2	3.1	11.7	3.5	13.2	3.8	14.3	4.3	16.2
OX-029	.029	.74	3.6	13.6	4.2	15.9	4.7	17.7	5.2	19.6	5.8	21.9
OX-033	.033	.84	4.7	17.7	5.5	20.8	6.1	23.0	6.7	25.3	7.5	28.3
OX-038	.038	.97	6.3	23.8	7.2	27.2	8.1	30.6	8.9	33.6	9.9	37.4
OX-042	.042	1.07	7.7	29.1	8.8	33.3	9.9	37.4	10.8	40.8	12.1	45.8
OX-046	.046	1.17	9.2	34.8	10.6	40.1	11.8	44.6	13.0	49.2	14.5	54.8

ACCESSORIES

NOZZLE EXTENSIONS

Part No. 53844
Extensions are installed into the Orbi-Jet™ X22 tool to provide a wider cleaning pattern and serve as flow straighteners, further reducing turbulence for more aggressive waterjets. Sold Individually.

*Orifice size (or equivalent for fan types) is denoted in the part number (-018, etc.)

Flow charts on this page are applicable only to the Orbi-Jet™ X22 tool which uses a portion of the water to provide a bearing for nozzle rotation. Lower flow rates available and are listed in the Product Instructions.

WARNING: Flow rates greater than 7.5 gpm (28.4 lpm) are not recommended for use in hand gun cleaning operations with an Orbi-Jet™ X22 due to excessive thrust.

ORBI-JET X22 NOZZLES

UHPX/UHPXi/UHPXD SERIES NOZZLES

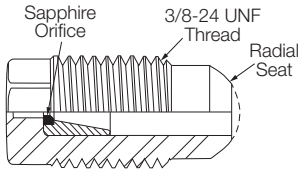

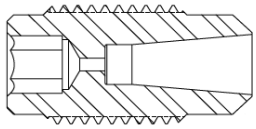

- Premium high productivity sapphire (UHPX and UHPXi) and synthetic diamond (UNPXD) nozzles for use in the Orbi-Jet X22.
- Tapered orifice retainer reduces turbulence and provides a cohesive, aggressive waterjet.
- Select nozzles from the charts below by choosing operating pressure, desired flow, and two or four nozzle operation.
- UHPX and UHPXD have 5/16" external hex, UHPXi have 5/32" internal hex

FOUR UHPX/UHPXi/UHPXD NOZZLES

UHPX PART NO.	UHPXi PART NO.	UHPXD PART NO.	ORIFICE DIAMETER		12,500 psi (862 bar)		15,000 psi (1,034 bar)		17,500 psi (1,207 bar)		20,000 psi (1,379 bar)		22,500 psi (1,551 bar)	
			in	mm	gpm	lpm	gpm	lpm	gpm	lpm	gpm	lpm	gpm	lpm
UHPX-018	UHPXi-018	UHPXD-018	.018	0.46	4.2	15.9	4.6	17.3	4.8	18.3	5.1	19.2	5.3	20.0
UHPX-019	UHPXi-019	UHPXD-019	.019	0.48	4.5	17.1	4.9	18.7	5.2	19.8	5.5	20.8	5.7	21.7
UHPX-020	UHPXi-020	UHPXD-020	.020	0.51	4.9	18.5	5.3	20.1	5.6	21.3	5.9	22.4	6.2	23.5
UHPX-021	UHPXi-021	UHPXD-021	.021	0.53	5.2	19.9	5.7	21.7	6.1	23.0	6.4	24.2	6.7	25.3
UHPX-022	UHPXi-022	UHPXD-022	.022	0.56	5.6	21.3	6.1	23.2	6.5	24.7	6.9	26.0	7.2	27.3
UHPX-023	UHPXi-023	UHPXD-023	.023	0.58	6.0	22.8	6.6	24.9	7.0	26.5	7.4	28.0	7.7	29.3
UHPX-024	UHPXi-024	UHPXD-024	.024	0.61	6.5	24.4	7.0	26.7	7.5	28.4	7.9	30.0	8.3	31.5
UHPX-025	UHPXi-025	UHPXD-025	.025	0.64	6.9	26.1	7.5	28.5	8.0	30.3	8.5	32.1	8.9	33.7
UHPX-026	UHPXi-026	UHPXD-026	.026	0.66	7.3	27.8	8.0	30.4	8.6	32.4	9.0	34.2	9.5	36.0
UHPX-027	UHPXi-027	UHPXD-027	.027	0.69	7.8	29.6	8.5	32.3	9.1	34.5	9.6	36.5	10.1	38.4
UHPX-028	UHPXi-028	UHPXD-028	.028	0.71	8.3	31.5	9.1	34.4	9.7	36.7	10.3	38.9	10.8	40.9
UHPX-029	UHPXi-029	UHPXD-029	.029	0.74	8.8	33.4	9.6	36.5	10.3	39.0	10.9	41.3	11.5	43.5
UHPX-030	UHPXi-030	UHPXD-030	.030	0.76	9.3	35.4	10.2	38.7	10.9	41.4	11.6	43.8	12.2	46.2
UHPX-031	UHPXi-031	UHPXD-031	.031	0.79	9.9	37.5	10.8	40.9	11.6	43.8	12.3	46.5	12.9	48.9
UHPX-032	UHPXi-032	UHPXD-032	.032	0.81	10.5	39.6	11.4	43.3	12.2	46.3	13.0	49.1	13.7	51.8
UHPX-033	UHPXi-033	UHPXD-033	.033	0.84	11.0	41.8	12.1	45.7	12.9	48.9	13.7	51.9	14.5	54.8
UHPX-034	UHPXi-034	UHPXD-034	.034	0.86	11.6	44.1	12.7	48.2	13.6	51.6	14.5	54.8	15.3	57.8
UHPX-037	UHPXi-037	UHPXD-037	.037	0.94	13.5	51.3	14.8	56.1	15.9	60.1	16.9	63.9	17.8	67.5
UHPX-038	UHPXi-038	UHPXD-038	.038	0.97	14.2	53.8	15.5	58.9	16.7	63.1	17.7	67.1	18.7	70.9
UHPX-042	UHPXi-042	UHPXD-042	.042	1.07	17.1	64.6	18.7	70.7	20.1	76.0	21.4	80.8	22.6	85.4

ORBI-JET X22 NOZZLES

TWO UHPX/UHPXi/UHPXD NOZZLES														
UHPX PART NO.	UHPXi PART NO.	UHPXD PART NO.	ORIFICE DIAMETER		12,500 psi (862 bar)		15,000 psi (1,034 bar)		17,500 psi (1,207 bar)		20,000 psi (1,379 bar)		22,500 psi (1,551 bar)	
			in	mm	gpm	lpm	gpm	lpm	gpm	lpm	gpm	lpm	gpm	lpm
UHPX-025	UHPXi-025	UHPXD-025	.025	0.64	4.1	15.5	4.5	16.9	4.7	17.8	4.9	18.7	5.2	19.5
UHPX-026	UHPXi-026	UHPXD-026	.026	0.66	4.3	16.4	4.7	17.8	5.0	18.8	5.2	19.8	5.5	20.7
UHPX-027	UHPXi-027	UHPXD-027	.027	0.69	4.6	17.3	5.0	18.8	5.3	19.9	5.5	20.9	5.8	21.9
UHPX-028	UHPXi-028	UHPXD-028	.028	0.71	4.8	18.2	5.2	19.8	5.5	21.0	5.8	22.1	6.1	23.1
UHPX-029	UHPXi-029	UHPXD-029	.029	0.74	5.1	19.2	5.5	20.9	5.9	22.1	6.2	23.3	6.4	24.4
UHPX-030	UHPXi-030	UHPXD-030	.030	0.76	5.3	20.2	5.8	22.0	6.2	23.3	6.5	24.6	6.8	25.7
UHPX-031	UHPXi-031	UHPXD-031	.031	0.79	5.6	21.2	6.1	23.1	6.5	24.5	6.8	25.9	7.2	27.1
UHPX-032	UHPXi-032	UHPXD-032	.032	0.81	5.9	22.3	6.4	24.3	6.8	25.8	7.2	27.2	7.5	28.6
UHPX-033	UHPXi-033	UHPXD-033	.033	0.84	6.2	23.4	6.7	25.5	7.2	27.1	7.6	28.6	7.9	30.0
UHPX-034	UHPXi-034	UHPXD-034	.034	0.86	6.5	24.5	7.1	26.7	7.5	28.5	7.9	30.1	8.3	31.6
UHPX-037	UHPXi-037	UHPXD-037	.037	0.94	7.4	28.1	8.1	30.7	8.6	32.7	9.1	34.6	9.6	36.4
UHPX-038	UHPXi-038	UHPXD-038	.038	0.97	7.8	29.4	8.5	32.1	9.0	34.2	9.6	36.2	10.1	38.1
UHPX-042	UHPXi-042	UHPXD-042	.042	1.07	9.2	34.8	10.0	38.0	10.7	40.6	11.4	43.1	12.0	45.4
UHPX-046	UHPXi-046	UHPXD-046	.046	1.17	10.8	40.7	11.8	44.5	12.6	47.7	13.4	50.6	14.1	53.4

*Orifice size (or equivalent for fan types) is denoted in the part number (-018, etc.).

Flow charts on this page are applicable only to the Orbi-Jet™ X22 tool which uses a portion of the water to provide a bearing for nozzle rotation. Lower flow rates available and are listed in the Product Instructions.

WARNING: Flow rates greater than 7.5 gpm (28.4 lpm) are not recommended for use in hand gun cleaning operations with an Orbi-Jet X22 due to excessive thrust.

J-FORCE™
2-INCH PIPE CLEANING TOOL

The Jetstream 2-inch J-Force™ tool is a self-powered rotating tool designed to easily navigate and clean pipes with two-inch bends. The 2-inch J-Force™ tool has front, side, and rear jets that clear blockages, clean, and provide thrust to propel the tool down the pipe for maximum cleaning power and minimum wear. Water provides the rotational motion and creates the bearing on which the nozzles spin. No oil or ball bearings to replace!

2" J-FORCE™ NOZZLE (JF2X15, JF2X22)

- Equipped with three forward-facing ports at 15°/30°/45°, two radial ports at 90°, and two rearward-facing ports at 132°.
- Seven non-replaceable nozzles are factory installed and must be purchased separately at the time of order.
- **The tool is not designed to be repairable in the field.**

PART NO.	INLET CONNECTION*	SPEED RANGE	DIAMETER		ASSEMBLY LENGTH		ASSEMBLY WEIGHT		MAX. FLOW RATE		MAX.OPERATING PRESSURE	
		RPM	in	mm	in	mm	lbs	kg	gpm	lpm	psi	bar
JF2X15												
65225	1/4" BSPP	1000-2000	1.36	35	2.02	51	.5	1.1	20	75	15,000	1000
64772	1/4" NPT	1000-2000	1.36	35	2.02	51	.5	1.1	20	75	22,000	1550
JF2X22												
64772	1/4" NPT	1000-2000	1.36	35	2.02	51	.5	1.1	20	75	22,000	1550
65272	3/8" MP LH	1000-2000	1.36	35	2.02	51	.5	1.1	20	75	22,000	1550
65273	3/8" MP RH	1000-2000	1.36	35	2.02	51	.5	1.1	20	75	22,000	1550
65274	9/16" MP LH	1000-2000	1.36	35	2.02	51	.5	1.1	20	75	22,000	1550
65275	9/16" MP RH	1000-2000	1.36	35	2.02	51	.5	1.1	20	75	22,000	1550

*See details on all connection types in Section I.

2" J-FORCE NOZZLES

2-INCH J-FORCE NOZZLES

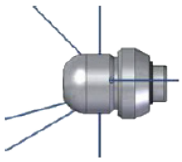

- Tool is equipped with seven nozzles: three forward-facing ports at 15°/30°/45°, two radial ports at 90°, and two rearward-facing ports at 132°.
- Non-replaceable nozzles are factory installed and must be purchased separately at the time of order.

UNIVERSAL CONFIGURATION

ORIFICE DIAMETER						10,000 psi (690 bar)		12,500 psi (862 bar)		15,000 psi (1,034 bar)		17,500 psi (1,207 bar)		20,000 psi (1,379 bar)		22,000 psi (1,516 bar)	
FWD (x3)		90°(x2)		REAR (x2)													
in	mm	in	mm	in	mm	gpm	lpm	gpm	lpm	gpm	lpm	gpm	lpm	gpm	lpm	gpm	lpm
.016	.406	.016	.406	.026	.660					12.0	45.4	13.0	49.2				
.016	.406	.016	.406	.029	.736	9.0	34.0										
.016	.406	.018	.457	.026	.660									15.0	56.7	16.0	60.5
.016	.406	.020	.508	.026	.660							14.0	52.9				
.016	.406	.020	.508	.029	.736	10.0	37.8										
.016	.406	.022	.558	.026	.660					13.0	49.2			16.0	60.5	17.0	64.3
.018	.457	.018	.457	.029	.736							15.0	56.7				
.018	.457	.018	.457	.032	.812	11.0	41.6	13.0	49.2								
.018	.457	.020	.508	.029	.736					14.0	52.9			17.0	64.3	18.0	68.1
.018	.457	.022	.558	.029	.736							16.0	60.5			19.0	71.9
.018	.457	.024	.609	.029	.736					15.0	56.7	17.0	64.3	18.0	68.1		
.018	.457	.024	.609	.032	.812	12.0	45.4	14.0	52.9								
.018	.457	.026	.660	.029	.736									19.0	71.9	20.0	75.7
.018	.457	.026	.660	.032	.812			15.0	56.7								
.018	.457	.032	.812	.039	.990			11.0	41.6								
.020	.508	.020	.508	.032	.812					16.0	60.5						
.020	.508	.020	.508	.035	.889	13.0	49.2										
.020	.508	.022	.558	.032	.812							18.0	68.1				
.020	.508	.024	.609	.032	.812					17.0	64.3	19.0	71.9				
.020	.508	.024	.609	.035	.889	14.0	52.9										
.020	.508	.024	.609	.039	.990			10.0	37.8								
.020	.508	.026	.660	.032	.812					18.0	68.1	20.0	75.7				
.020	.508	.029	.736	.035	.889	15.0	56.7										
.020	.508	.032	.812	.035	.889	16.0	60.5										
.022	.558	.022	.558	.035	.889			16.0	60.5								
.022	.558	.024	.609	.035	.889			17.0	64.3	19.0	71.9						
.022	.558	.026	.660	.035	.889					20.0	75.7						
.022	.558	.029	.736	.035	.889			18.0	68.1								
.022	.558	.029	.736	.042	1.06			12.0	45.4								
.022	.558	.032	.812	.035	.889			19.0	71.9								
.024	.609	.026	.660	.039	.990	17.0	64.3										
.024	.609	.029	.736	.039	.990	18.0	68.1										
.024	.609	.032	.812	.039	.990	19.0	71.9										
.026	.660	.029	.736	.042	1.06	20.0	75.7										

* Jetstream does not recommend operating the 2" J-Force tool at pressure/configuration combinations indicated in dark gray.

J-FORCE™ GEN II
4-INCH PIPE CLEANING TOOL

4" J-FORCE™ GEN II TOOL (JF4X15, JF4X22)

The Jetstream J-Force™ 4" Gen II tool is a self-powered rotating tool designed to easily navigate and clean pipes with four-inch bends. The 4-inch J-Force Gen II tool has front, side, and rear jets that clear blockages, clean, and provide thrust to propel the tool down the pipe for maximum cleaning power and minimum wear. Water provides the rotational motion and creates the bearing on which the nozzles spin. No oil or ball bearings to replace!

- Equipped with two forward-facing ports at 10°, two radial ports at 100°, and two rearward-facing ports at 135° that accept Jetstream **JS2** and **P2TCS** type nozzles (see page G-39).
- Designed with an eddy-current braking system which controls rotation speed for maximum cleaning power and minimum wear.
- Completely field repairable in less than 5 minutes!
- **Premium Kits** and **Starter Kits are** available for full product tools (see table below). Premium kits include a rebuild kit with a replacement mandrel, O-rings, bushings, a thrust bearing, and sealant required to completely rebuild the tool quickly and easily.

PART NO.	INLET CONNECTION*	SPEED RANGE	DIAMETER		ASSEMBLY LENGTH		ASSEMBLY WEIGHT		MAX. FLOW RATE		MAX.OPERATING PRESSURE	
		RPM	in	mm	in	mm	lbs	kg	gpm	lpm	psi	bar
JF4X15												
66215	3/8" NPT	1000-2000	2.75	70	3.85	98	3.85	1.75	40	150	15,000	1034
JF4X22												
66216	3/4" Type M	1000-2000	2.75	70	3.85	98	3.90	1.77	40	150	22,000	1516
66217	9/16" MP LH	1000-2000	2.75	70	3.85	98	3.90	1.77	40	150	22,000	1516
66218	9/16" MP RH	1000-2000	2.75	70	3.85	98	3.90	1.77	40	150	22,000	1516

*See details on all connection types in Section I.

TOOL KITS

PART NO.	KIT TYPE	INLET CONNECTION
66250	Starter	3/8" NPT
66252	Starter	Type M
66254	Starter	9/16" MP LH
66256	Starter	9/16" MP RH
66251	Premium	3/8" NPT
66253	Premium	Type M
66255	Premium	9/16" MP LH
66257	Premium	9/16" MP RH

4" J-FORCE™ GEN II TOOLS (JF4X15, JF4X22)

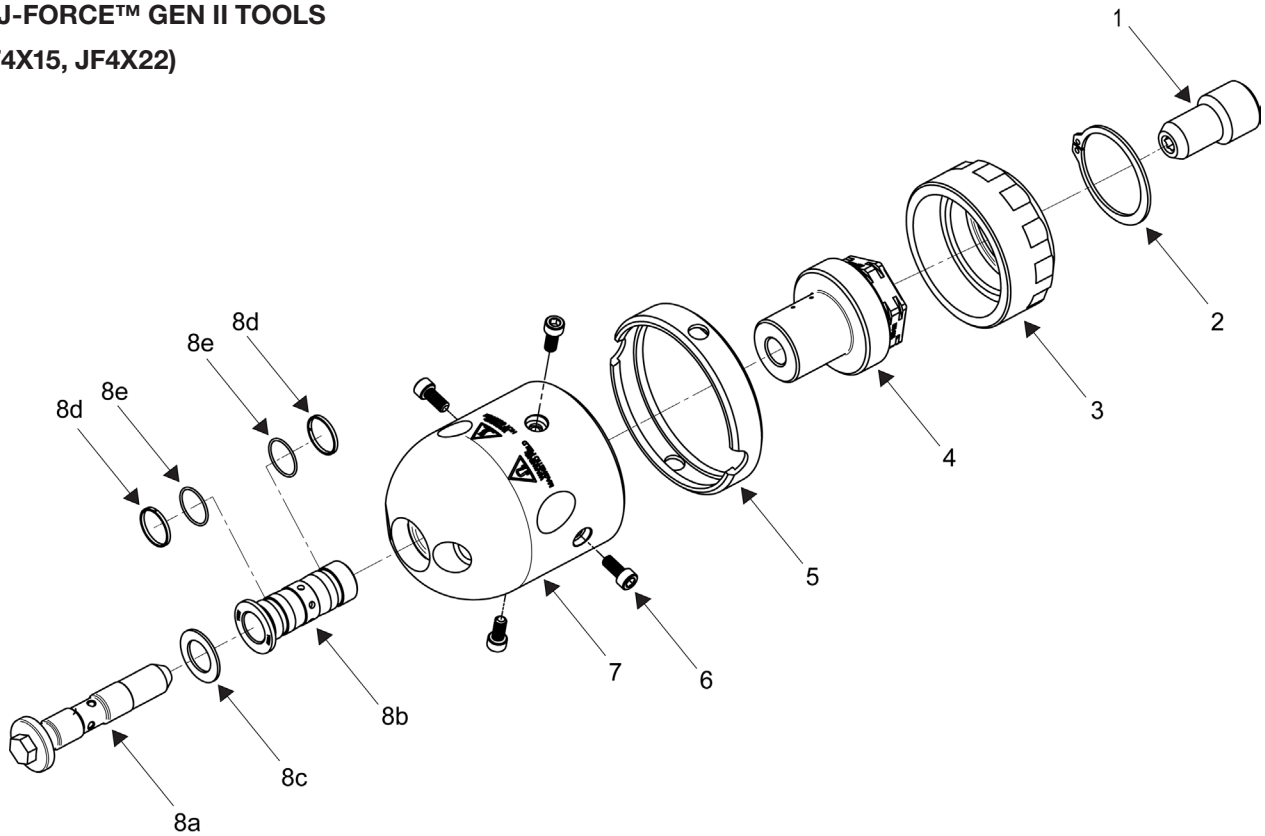

PART BREAKDOWN

ITEM	PART NO.	DESCRIPTION	ITEM	PART NO.	DESCRIPTION
1	65923	Connector, Mandrel (66216 only)	6	66220	Wear Ring Screws
2	64864	Retaining Ring	7	66219	Head Assy
3	64007	Brake Adjuster	8	66248	Rebuild Kit
4	65906	Inlet Nut (66215)	8a	66336	Mandrel
	65922	Inlet Nut (66216)	8b	52349	Flange Bushing
	65921	Inlet Nut (66217)	8c	64100	Thrust Bearing
	65919	Inlet Nut (66218)	8d	52683	Backup Ring, Bushing
5	64103	Wear Ring	8e	26760	O-Ring, Bushing

4" J-FORCE™ GEN II NOZZLES

JS2 / P2TCS NOZZLES

JS2

P2TCS

Low profile design for unobstructed pipe cleaning with short inlet

- Tapered geometry provides highly cohesive, distortion-free waterjets for concentrated, work saving cleaning and cutting power
- Straight (0°) patterns
- 1/8″ NPT Male connection
- 22,000 psi (1517 bar) maximum working pressure

UNIVERSAL CONFIGURATION*

ORIFICE DIAMETER				10,000 psi (690 bar)		12,500 psi (862 bar)		15,000 psi (1,034 bar)		17,500 psi (1,207 bar)		20,000 psi (1,379 bar)		22,000 psi (1,517 bar)	
FWD (x2), SIDE (x2)**		REAR (x2**)													
in	mm	in	mm	gpm	lpm	gpm	lpm	gpm	lpm	gpm	lpm	gpm	lpm	gpm	lpm
.018	.457	.032	.812									17.0	64.3	18.0	68.1
.018	.457	.035	.889					16.0	60.5	17.0	64.3	18.0	68.1	19.0	71.9
.018	.457	.038	.965			16.0	60.5	17.0	64.3	19.0	71.9	20.0	75.7	21.0	79.4
.018	.457	.042	1.06	16.0	60.5	18.0	68.1	19.0	71.9	21.0	79.4	22.0	83.2		
.018	.457	.047	1.19	18.0	68.1	20.0	75.7	22.0	83.2	24.0	90.8				
.018	.457	.052	1.32			23.0	87.0								
.018	.457	.057	1.44	24.0	90.8										
.020	.508	.035	.889							18.0	68.1	19.0	71.9	20.0	75.7
.020	.508	.038	.965					18.0	68.1	20.0	75.7	21.0	79.4	22.0	83.2
.020	.508	.042	1.06	17.0	64.3	19.0	71.9	20.0	75.7	22.0	83.2			25.0	94.6
.020	.508	.047	1.19	19.0	71.9	21.0	79.4	23.0	87.0	25.0	94.6				
.020	.508	.052	1.32			24.0	90.8								
.022	.558	.038	.965											24.0	90.8
.022	.558	.042	1.06					21.0	79.4	23.0	87.0	25.0	94.6	26.0	98.4
.022	.558	.047	1.19	20.0	75.7	22.0	83.2	25.0	94.6						
.022	.558	.052	1.32	23.0	87.0	25.0	94.6	28.0	105.9						
.024	.609	.038	.965									24.0	90.8		
.024	.609	.042	1.06									26.0	98.4	28.0	105.9
.024	.609	.047	1.19	21.0	79.4			26.0	98.4	28.0	105.9				
.024	.609	.052	1.32			26.0	98.4	29.0	109.7						
.024	.609	.057	1.44	27.0	102.2										
.026	.660	.038	.965											27.0	102.2
.026	.660	.042	1.06					24.0	90.8	26.0	98.4	28.0	105.9		
.026	.660	.047	1.19	22.0	83.2			27.0	102.2	29.0	109.7				
.026	.660	.052	1.32	25.0	94.6	28.0	105.9	30.0	113.5						
.026	.660	.057	1.44	28.0	105.9	31.0	117.3								
.026	.660	.063	1.60	32.0	121.1										

* Jetstream does not recommend operating the 4" J-Force tool at pressure/configuration combinations indicated in dark gray.
** Nozzle part numbers are JS-XXX and P2TCS-XXX, where -XXX is the orifice size.

4" J-FORCE™ GEN II NOZZLES

JS2 / P2TCS NOZZLES															
UNIVERSAL CONFIGURATION*															
ORIFICE DIAMETER				10,000 psi (690 bar)		12,500 psi (862 bar)		15,000 psi (1,034 bar)		17,500 psi* (1,207 bar)		20,000 psi (1,379 bar)		22,000 psi (1,517 bar)	
FWD (x2), SIDE (x2)**		REAR (x2)**													
in	mm	in	mm	gpm	lpm	gpm	lpm	gpm	lpm	gpm	lpm	gpm	lpm	gpm	lpm
.029	.736	.042	1.06									30.0	113.5		
.029	.736	.047	1.19			27.0	102.2								
.029	.736	.052	1.32	26.0	98.4	30.0	113.5	33.0	124.9						
.029	.736	.057	1.44	29.0	109.7	33.0	124.9								
.029	.736	.063	1.60	33.0	124.9										
.032	.812	.047	1.19			29.0	109.7	32.0	121.1						
.032	.812	.052	1.32			32.0	121.1								
.032	.812	.057	1.44	31.0	117.3										
.032	.812	.063	1.60	35.0	132.4										
.035	.889	.052	1.32	30.0	113.5	34.0	128.7								
.035	.889	.057	1.44	34.0	128.7										
.035	.889	.063	1.60	37.0	140.0										
.038	.965	.052	1.32			36.0	136.2								
.038	.965	.057	1.44	36.0	136.2										

* Jetstream does not recommend operating the 4" J-Force tool at pressure/configuration combinations indicated in dark gray.
** Nozzle part numbers are JS-XXX and P2TCS-XXX, where -XXX is the orifice size.

J-FORCE™
6-INCH PIPE CLEANING TOOL

6" J-FORCE™ TOOL (JF6X15, JF6X22)

The Jetstream J-Force™ 6" tool is a self-powered rotating tool designed to easily navigate and clean pipes with four-inch bends. The 6-inch J-Force tool has front, side, and rear jets that clear blockages, clean, and provide thrust to propel the tool down the pipe for maximum cleaning power and minimum wear. Water provides the rotational motion and creates the bearing on which the nozzles spin. No oil or ball bearings to replace!

- Equipped with two forward-facing ports at 10°, two radial ports at 100°, and two rearward-facing ports at 135° that accept Jetstream **P4TC** and **JS4F** type nozzles (see pages G-38 and G-40, respectively).
- Designed with an eddy-current braking system which controls rotation speed for maximum cleaning power and minimum wear.
- Completely field repairable in less than 5 minutes!
- **Premium Kits** and **Starter Kits are** available for full product tools (see table below). Premium kits include a rebuild kit with a replacement mandrel, O-rings, bushings, a thrust bearing, and sealant required to completely rebuild the tool quickly and easily.

PART NO.	INLET CONNECTION*	SPEED RANGE	DIAMETER		ASSEMBLY LENGTH		ASSEMBLY WEIGHT		MAX. FLOW RATE		MAX.OPERATING PRESSURE	
		RPM	in	mm	in	mm	lbs	kg	gpm	lpm	psi	bar
JF6X15												
64915	1/2" NPT	800-1000	3.75	95	5.34	136	11.0	5.0	60	226	15,000	1034
JF6X22												
65380	9/16" MP	800-1000	3.75	95	5.34	136	11.0	5.0	60	226	22,000	1516
65381	M24	800-1000	3.75	95	5.34	136	11.0	5.0	60	226	22,000	1516

*See details on all connection types in Section I.

TOOL KITS

PART NO.	KIT TYPE	INLET CONNECTION
65479	Starter	1/2" NPT
65480	Premium	1/2" NPT
65481	Starter	9/16" MP
65482	Premium	9/16" MP
65483	Starter	M24
65484	Premium	M24

6" J-FORCE™ TOOLS (JF6X15, JF6X22)

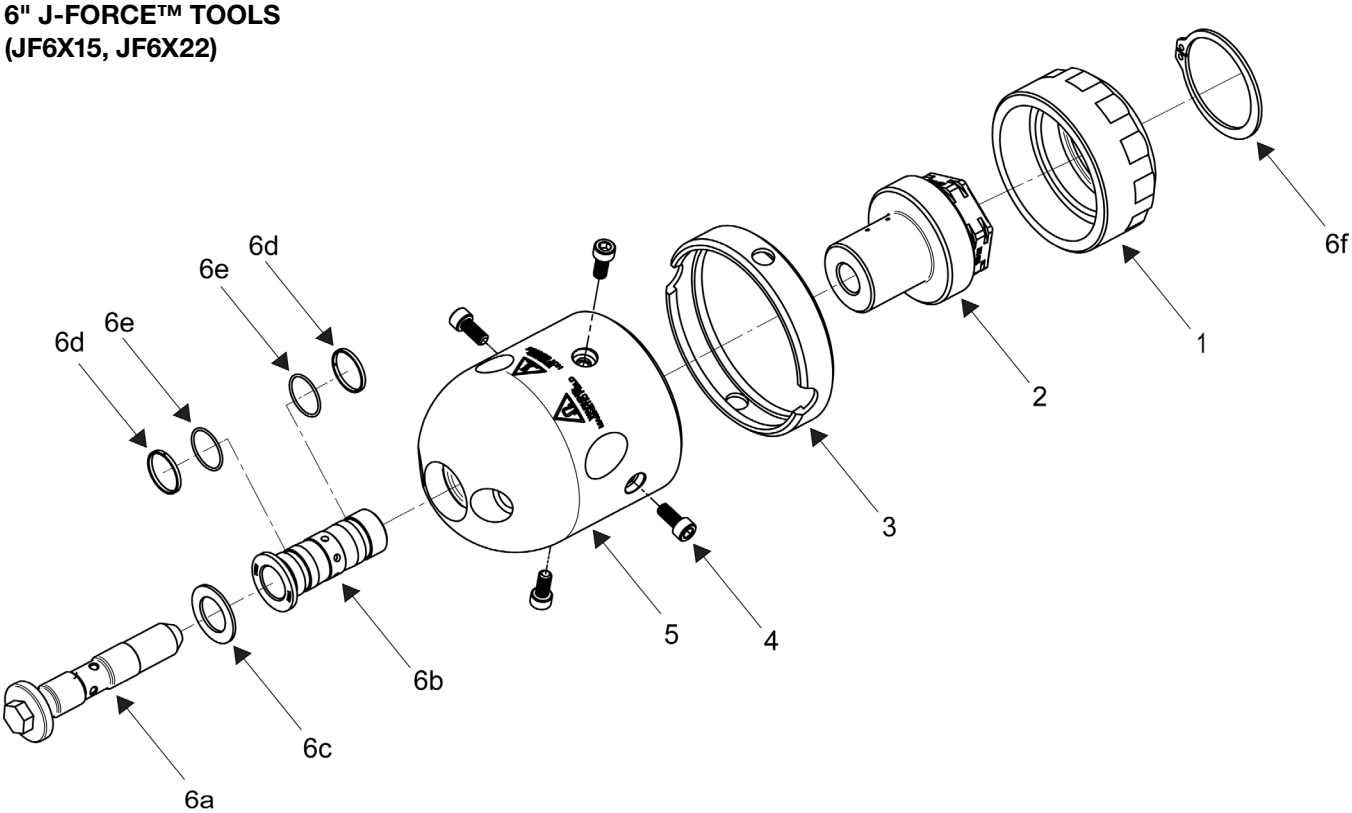

PART BREAKDOWN

ITEM	PART NO.	DESCRIPTION	ITEM	PART NO.	DESCRIPTION
1	64827	Brake Adjuster	8	65388	Rebuild Kit
2	66740	Inlet Nut (64915)	8a	66347	Mandrel
	66348	Inlet Nut (65380)	8b	66137	Flange Bushing
	66741	Inlet Nut (65381)	8c	64823	Thrust Bearing
3	64828	Wear Ring	8d	66138	Backup Ring, Bushing
4	66220	Wear Ring Screws	8e	26921	O-Ring, Bushing
5	65385	Head Assy	6f	64864	Retaining Ring

6" J-FORCE™ NOZZLES

JS4F / P4TC NOZZLES

JS4F

P4TC

- Low profile design for unobstructed pipe cleaning
- Tapered geometry provides highly cohesive, distortion-free waterjets for concentrated, work saving cleaning and cutting power
- Straight (0°) patterns
- 1/4″ NPT Male connection
- 22,000 psi (1517 bar) maximum working pressure

UNIVERSAL CONFIGURATION*

ORIFICE DIAMETER				10,000 psi (690 bar)		12,500 psi (862 bar)		15,000 psi (1,034 bar)		17,500 psi (1,207 bar)		20,000 psi (1,379 bar)		22,000 psi (1,517 bar)	
FWD (x2), SIDE (x2)**		REAR (x2**)													
in	mm	in	mm	gpm	lpm	gpm	lpm	gpm	lpm	gpm	lpm	gpm	lpm	gpm	lpm
.018	.457	.038	.965											24.0	90.8
.018	.457	.042	1.06									25.0	94.6	27.0	102.2
.018	.457	.047	1.19							27.0	102.2			30.0	113.6
.018	.457	.052	1.32					28.0	106.0	30.0	113.6	33.0	124.9	34.0	128.7
.018	.457	.057	1.45			29.0	109.8	32.0	121.1			37.0	140.1		
.018	.457	.063	1.60	30.0	113.6										
.018	.457	.069	1.75	34.0	128.7	38.0	143.8								
.020	.508	.038	.965											25.0	94.6
.020	.508	.042	1.06									27.0	102.2		
.020	.508	.047	1.19					26.0	98.4	28.0	106.0	30.0	113.6	31.0	117.3
.020	.508	.052	1.32					29.0	109.8					35.0	132.5
.020	.508	.057	1.45							35.0	132.5				
.020	.508	.063	1.60	31.0	117.3			38.0	143.8	41.0	155.2				
.020	.508	.067	1.70			37.0	140.1								
.020	.508	.069	1.75	35.0	132.5	39.0	147.6								
.020	.508	.073	1.85	38.0	143.8										
.022	.559	.042	1.06							26.0	98.4			29.0	109.8
.022	.559	.047	1.19					27.0	102.2	29.0	109.8	31.0	117.3	33.0	124.9
.022	.559	.052	1.32			28.0	106.0	30.0	113.6	33.0	124.9	35.0	132.5	37.0	140.1
.022	.559	.057	1.45			31.0	117.3					39.0	147.6		
.022	.559	.063	1.60	32.0	121.1			39.0	147.6	42.0	159.0				
.022	.559	.067	1.70					42.0	159.0						
.022	.559	.069	1.75	36.0	136.3			44.0	166.6						
.022	.559	.073	1.85	39.0	147.6										
.024	.610	.038	.965											28.0	106.0
.024	.610	.042	1.06									29.0	109.8		
.024	.610	.052	1.32							34.0	128.7	36.0	136.3	38.0	143.8
.024	.610	.057	1.45			32.0	121.1			38.0	143.8	41.0	155.2		

* Jetstream does not recommend operating the 6" J-Force tool at pressure/configuration combinations indicated in dark gray.
** Nozzle part numbers are JS4F-XXX and P4TC-XXX, where -XXX is the orifice size.

6" J-FORCE™ NOZZLES

JS4F / P4TC NOZZLES															
UNIVERSAL CONFIGURATION*															
ORIFICE DIAMETER				10,000 psi (690 bar)		12,500 psi (862 bar)		15,000 psi (1,034 bar)		17,500 psi* (1,207 bar)		20,000 psi (1,379 bar)		22,000 psi (1,517 bar)	
FWD (x2), SIDE (x2)**		REAR (x2)**													
in	mm	in	mm	gpm	lpm	gpm	lpm	gpm	lpm	gpm	lpm	gpm	lpm	gpm	lpm
.024	.610	.063	1.60			36.0	136.3								
.024	.610	.069	1.75	37.0	140.1	41.0	155.2								
.026	.660	.038	.965									28.0	106.0		
.026	.660	.042	1.06											32.0	121.1
.026	.660	.047	1.19							32.0	121.1	34.0	128.7	36.0	136.3
.026	.660	.052	1.32			30.0	113.6	33.0	124.9			38.0	143.8	39.0	147.6
.026	.660	.057	1.45			33.0	124.9	36.0	136.3	39.0	147.6				
.026	.660	.067	1.70					45.0	170.3						
.026	.660	.073	1.85	41.0	155.2	46.0	174.1								
.029	.737	.042	1.06							31.0	117.3				
.029	.737	.052	1.32					35.0	132.5			40.0	151.4		
.029	.737	.057	1.45			35.0	132.5								
.029	.737	.067	1.70			43.0	162.8								
.029	.737	.073	1.85	43.0	162.8	48.0	181.7								
.029	.737	.075	1.91	44.0	166.6										
.029	.737	.082	2.08	50.0	189.3										
.032	.813	.047	1.19					34.0	128.7	37.0	140.1			41.0	155.2
.032	.813	.052	1.32			34.0	128.7	37.0	140.1	40.0	151.4	43.0	162.8		
.032	.813	.057	1.45					41.0	155.2	44.0	166.6				
.032	.813	.063	1.60			42.0	159.0	46.0	174.1						
.032	.813	.067	1.70	40.0	151.4	45.0	170.3								
.032	.813	.082	2.08	52.0	196.8										
.035	.889	.052	1.32	33.0	124.9			40.0	151.4	43.0	162.8				
.035	.889	.057	1.45			40.0	151.4								
.035	.889	.063	1.60			44.0	166.6								
.035	.889	.069	1.75			49.0	185.5								
.035	.889	.073	1.85	47.0	177.9										
.038	.965	.052	1.32					43.0	162.8	46.0	174.1				
.038	.965	.057	1.45					47.0	177.9						
.038	.965	.063	1.60	42.0	159.0	47.0	177.9								
.038	.965	.067	1.70			50.0	189.3								
.038	.965	.069	1.75	46.0	174.1										
.038	.965	.073	1.85	49.0	185.5										
.038	.965	.075	1.91	51.0	193.1										
.042	1.06	.063	1.60	45.0	170.3	51.0	193.1								
.042	1.06	.067	1.70	48.0	181.7										
.042	1.06	.075	1.91	54.0	204.4										
.047	1.19	.067	1.70	53.0	200.6										
.052	1.32	.067	1.70	58.0	219.6										

* Jetstream does not recommend operating the 6" J-Force tool at pressure/configuration combinations indicated in dark gray.
** Nozzle part numbers are JS4F-XXX and P4TC-XXX, where -XXX is the orifice size.

ROTOMAG™ X22
PIPE CLEANING TOOL

The Jetstream RotoMag X22 and RotoMag X22N are self-powered rotating tools designed for cleaning stacks, sewer lines, drains, tanks, on-line boilers, and other large diameter pipes.

- Water provides the rotational motion and creates the bearing on which the nozzles spin. No oil or ball bearings to replace!
- Up to eight flush mounted nozzle inserts provide low profile for cleaning small pipes while extensions are available for larger pipes, allowing the Rotomag to clean pipes ranging from 3-1/2 to 60 inches in diameter.
- The RotoMag X22 uses **Tungsten Carbide RM Series** nozzles or **Sapphire RMS Series** nozzles. The RotoMag X22N uses **Tungsten Carbide P4TC Series** nozzles.
- Magnetic braking system controls rotational speed for minimal wear and maximum impact without streaking.
- Rebuild kit allows five minute replacement of wear components right in the field using two standard hex wrenches.
- Includes six nozzle port plugs.
- **Premium Kits** and **Starter Kits** are available for full product tools. **15K Adapter** (**PN. 29534**) included in Premium Kits.

PART NO.	INLET CONNECTION*	NOZZLE SIZE	SPEED RANGE	DIAMETER (LESS SHROUD)		ASSEMBLY LENGTH (WITH ADAPTER)		ASSEMBLY WEIGHT		MAX. FLOW RATE (HAND GUN)		MAX.OPERATING PRESSURE	
			RPM	in	mm	in	mm	lbs	kg	gpm	lpm	psi	bar
63945**	3/4″ NPT Female	1/2"-28 UNEF	50-300	2.75	70	8.65	225	6	2.7	50	189	15,000	1034
65095**		1/4" NPT Male											
NO MAGNETS													
65231**	3/4″ NPT Female	1/2"-28 UNEF	>300	2.75	70	8.65	225	6	2.7	50	189	15,000	1034
65232**		1/4" NPT Male											

*Inlet connection on the tool is 3/4" MP Female; inlet listed is with the adapter that is included in the Premium Kit with the part numbers shown.
**Without 15K Adapter, RotoMag X22 max pressure is 22,000 psi (1500 bar).

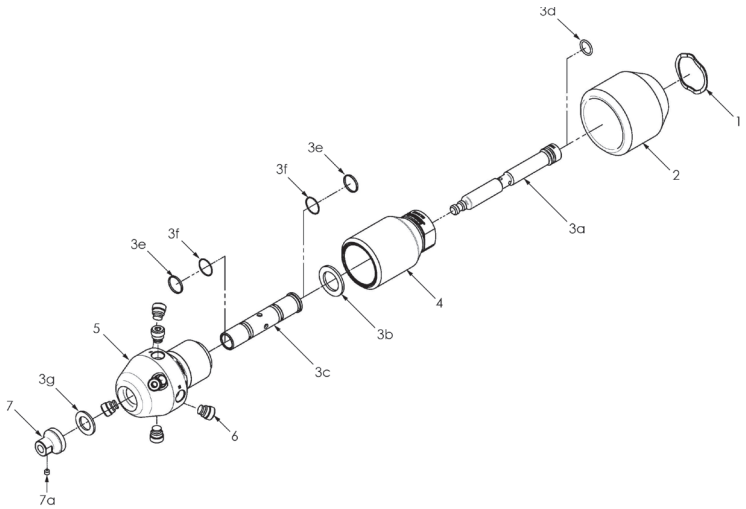

PART BREAKDOWN

ITEM	PART NO.	DESCRIPTION
1	27072	Retaining Ring
2	52803	Shroud
3	54535	Rebuild Kit
4	54452	Body
5	63944	Rotor (X22)
	65094	Rotor (X22N)
6	RM-PLUG	Plug (X22)
	64682	Plug (X22N)
6a*	26759	O-Ring
7	66170**	Tow Ring, No Eye
7a	26869	Setscrew
8*	29534	15K Adapter

*Not Shown. Reference page G-7.
**Standard. Tow Ring with Eye (52386) included with Premium kits only.

ROTOMAG™ X22 NOZZLES

RM / P4TC SERIES—CARBIDE NOZZLES

- High productivity carbide nozzles designed for use in the RotoMag.
- Precision honed carbide orifices significantly outlast conventional nozzle orifice material.
- Low profile design mounts flush with the outside diameter of the Rotomag.
- Tapered geometry provides highly cohesive, distortion-free waterjets for concentrated, work-saving cleaning and cutting power
- Select nozzles from the charts below by choosing operating pressure, desired flow, and two, four, or six nozzle operation.
- 1/2"-28 UNEF Male connection (RM Series) or 1/4" NPT Male (P4TC Series).

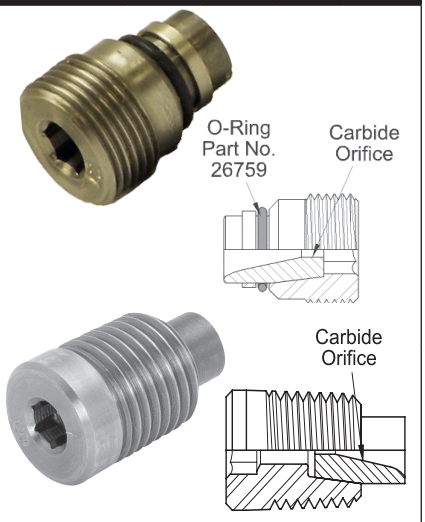

EIGHT RM / P4TC NOZZLES

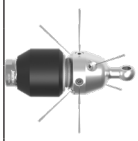

RM PART NO.	P4TC PART NO.	ORIFICE DIAMETER*		3,000 psi (206 bar)		5,000 psi (344 bar)		7,000 psi (482 bar)		10,000 psi (690 bar)		12,500 psi (862 bar)		15,000 psi (1,034 bar)	
		in	mm	gpm	lpm	gpm	lpm	gpm	lpm	gpm	lpm	gpm	lpm	gpm	lpm
RM-018	P4TC-018	.018	.46			5.3	20.0	6.3	23.8	7.5	28.3	8.4	31.8	9.2	35.2
RM-025	P4TC-025	.025	.64	7.6	28.7	9.9	37.4	11.7	44.2	14.1	53.3	15.7	59.4	17.1	64.7
RM-029	P4TC-029	.029	.74	10.1	38.2	13.2	49.9	15.6	59.0	18.7	70.7	20.9	79.1	22.8	86.3
RM-033	P4TC-033	.033	.84	13.1	49.5	16.9	63.9	20.1	76.0	24.1	91.2	26.9	101.8	29.4	111.3
RM-038	P4TC-038	.038	.97	17.3	65.4	22.4	84.7	26.5	100.3	31.7	120.0	35.5	134.4	38.8	146.9
RM-042	P4TC-042	.042	1.07	21.1	79.8	27.3	103.3	32.3	122.3	38.7	146.5	43.2	163.5	47.3	179.0
RM-046	P4TC-046	.046	1.17	25.2	95.3	32.6	123.4	38.7	146.5	46.3	175.3				
RM-055	P4TC-055	.055	1.40	36.0	136.3	46.5	176.0								
RM-063	P4TC-063	.063	1.59	47.1	178.3										

SIX RM / P4TC NOZZLES

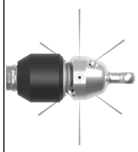

RM-018	P4TC-018	.018	.46							5.8	21.9	6.4	24.2	7	26.5
RM-025	P4TC-025	.025	.64	5.7	21.5	7.5	28.3	8.9	33.6	10.7	40.5	11.9	45.0	13.0	49.2
RM-029	P4TC-029	.029	.74	7.7	29.1	9.9	37.4	11.8	44.6	14.2	53.7	15.8	59.8	17.3	65.4
RM-033	P4TC-033	.033	.84	9.9	37.4	12.8	48.4	15.2	57.5	18.2	68.8	20.3	76.8	22.2	84.0
RM-038	P4TC-038	.038	.97	13.0	49.2	16.9	63.9	20.0	75.7	23.9	90.4	26.7	101.1	29.2	110.5
RM-042	P4TC-042	.042	1.07	15.8	59.8	20.5	77.6	24.3	91.9	29.1	110.2	32.5	123.0	35.6	134.8
RM-046	P4TC-046	.046	1.17	19.0	71.9	24.6	93.1	29.1	110.2	34.8	131.7	38.9	147.3	42.6	161.3
RM-055	P4TC-055	.055	1.40	27.0	102.2	35.0	132.5	41.4	156.7	49.6	187.8				
RM-063	P4TC-063	.063	1.59	35.4	134.0	45.8	173.4								
RM-067	P4TC-067	.067	1.70	40.0	151.4										
RM-070	P4TC-070	.070	1.78	43.7	165.4										
RM-073	P4TC-073	.073	1.85	47.5	179.8										

*Orifice size (or equivalent for fan types) is denoted in the part number (-018, etc.)

Flow charts on this page are applicable only to the RotoMag™ X22 tool which uses a portion of the water to provide a bearing for nozzle rotation. Lower flow rates available and are listed in the Product Instructions.

ROTOMAG™ X22 NOZZLES

FOUR RM / P4TC NOZZLES																
RM PART NO.	P4TC PART NO.	ORIFICE DIAMETER*		3,000 psi (206 bar)		5,000 psi (344 bar)		7,000 psi (482 bar)		10,000 psi (690 bar)		12,500 psi (862 bar)		15,000 psi (1,034 bar)	
		in	mm	gpm	lpm	gpm	lpm	gpm	lpm	gpm	lpm	gpm	lpm	gpm	lpm
RM-025	P4TC-025	.025	.64					6.1	23.0	7.3	27.6	8.1	30.6	8.9	33.6
RM-029	P4TC-029	.029	.74			6.7	25.3	8.0	30.2	9.6	36.2	10.7	40.5	11.7	44.2
RM-033	P4TC-033	.033	.84	6.6	24.9	8.6	32.5	10.3	38.9	12.3	46.5	13.7	51.8	15.0	56.7
RM-038	P4TC-038	.038	.97	8.7	32.9	11.3	42.7	13.5	51.1	16.1	60.9	18.0	68.1	19.7	74.5
RM-042	P4TC-042	.042	1.07	10.6	40.1	13.8	52.2	16.4	62.0	19.6	74.1	21.9	82.9	23.9	90.4
RM-046	P4TC-046	.046	1.17	12.7	48.0	16.5	62.4	19.6	74.1	23.4	87.4	26.1	98.8	28.6	108.3
RM-055	P4TC-055	.055	1.40	18.1	68.5	23.4	88.5	27.8	105.2	33.2	125.7	37.1	140.4	40.6	153.7
RM-063	P4TC-063	.063	1.59	23.7	89.7	30.6	115.8	36.3	137.4	43.4	164.3	48.5	183.6		
RM-067	P4TC-067	.067	1.70	26.7	101.1	34.6	131	41.0	155.2	49.0	185.5				
RM-070	P4TC-070	.070	1.78	29.2	110.5	37.7	142.7	44.7	169.2						
RM-073	P4TC-073	.073	1.85	31.7	120.0	41.0	155.2	48.6	184.0						
RM-078	P4TC-078	.078	1.98	36.2	137.0	46.8	177.2								
RM-081	P4TC-081	.081	2.06	39.0	147.6										
RM-089	P4TC-089	.089	2.26	47.0	177.9										

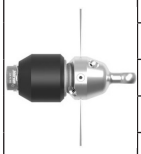

TWO RM / P4TC NOZZLES															
RM-029	P4TC-029	.029	.74									5.7	21.6	6.2	23.5
RM-033	P4TC-033	.033	.84					5.4	20.4	6.4	24.2	7.2	27.2	7.8	29.5
RM-038	P4TC-038	.038	.97			5.8	22.1	7.0	26.5	8.3	31.4	9.3	35.2	10.1	38.2
RM-042	P4TC-042	.042	1.07	5.4	20.4	7.0	26.5	8.4	31.8	10.1	38.2	11.2	42.2	12.3	46.5
RM-046	P4TC-046	.046	1.17	6.4	24.2	8.4	31.8	10.0	37.8	12.0	45.4	13.4	50.7	14.6	55.2
RM-055	P4TC-055	.055	1.40	9.1	34.6	11.9	45.0	14.1	53.3	16.9	63.9	18.8	71.1	20.6	77.9
RM-063	P4TC-063	.063	1.59	11.9	44.9	15.5	58.6	18.4	69.6	22.0	83.2	24.5	92.7	26.8	101.4
RM-067	P4TC-067	.067	1.70	13.5	51.1	17.5	66.3	20.7	78.3	24.8	93.8	27.7	104.9	30.3	114.7
RM-070	P4TC-070	.070	1.78	14.7	55.8	19.0	71.9	22.6	85.5	27.0	100.2	30.2	114.3	33.0	124.9
RM-073	P4TC-073	.073	1.85	16.0	60.5	20.7	78.3	24.5	92.7	29.3	110.9	32.8	124.2	35.8	135.5
RM-078	P4TC-078	.078	1.98	18.2	68.8	23.5	88.9	27.9	105.6	33.4	126.4	37.3	141.2	40.8	154.4
RM-081	P4TC-081	.081	2.06	19.6	74.1	25.4	96.1	30.1	113.9	36.0	136.3	40.2	152.2	44.0	166.6
RM-089	P4TC-089	.089	2.26	23.6	89.3	30.6	115.8	36.2	137.0	43.3	163.9	48.4	183.2		
RM-093	P4TC-093	.093	2.36	25.8	97.6	33.3	126.1	39.5	149.5	47.3	179.0				
RM-110	P4TC-110	.110	2.79	36.0	136.3	46.5	176.0								

*Orifice size (or equivalent for fan types) is denoted in the part number (-018, etc.)

Flow charts on this page are applicable only to the RotoMag X22 tool which uses a portion of the water to provide a bearing for nozzle rotation. Lower flow rates available and are listed in the Product Instructions.

ROTOMAG™ X22 NOZZLES

RMS SERIES—SAPPHIRE NOZZLES

- High productivity sapphire nozzles designed for use in the RotoMag
- More durable than tungsten carbide for longer service life and lower operating cost
- Low profile design mounts flush with the outside diameter of the Rotomag
- Select nozzles from the charts below by choosing operating pressure, desired flow, and two, four, or six nozzle operation

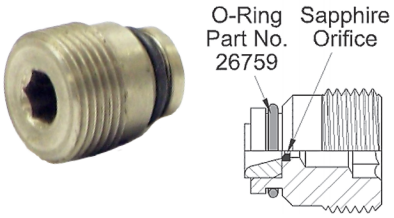

EIGHT RMS NOZZLES

PART NO.	ORIFICE DIAMETER*		10,000 psi (690 bar)		12,500 psi (862 bar)		15,000 psi (1,034 bar)		17,500 psi (1,207 bar)		20,000 psi (1,379 bar)	
	in	mm	gpm	lpm	gpm	lpm	gpm	lpm	gpm	lpm	gpm	lpm
RMS-018	.018	0.46	7.2	27.3	8.0	30.1	8.8	33.3	9.5	36.0	10.2	38.6
RMS-025	.025	0.64	12.0	45.4	13.4	50.7	14.7	55.8	15.9	60.2	17.0	64.3
RMS-029	.029	0.74	15.5	58.7	17.3	65.4	18.9	71.5	20.4	77.2	21.9	82.9
RMS-033	.033	0.84	19.4	73.4	21.7	82.1	23.8	90.1	25.7	97.3	27.5	104.0
RMS-038	.038	0.97	25.1	97.0	28.1	106.0	30.7	116.0	33.2	126.0	35.5	134.0
RMS-042	.042	1.07	30.2	114.0	33.8	128.0	37.0	140.0	40.0	151.0	42.7	162.0
RMS-046	.046	1.17	35.9	136.0	40.1	152.0	43.9	166.0	47.4	179.0	50.7	192.0
RMS-052	.052	1.32	45.3	171.0	50.6	192.0						

SIX RMS NOZZLES

RMS-018	.018	0.46	5.4	20.4	5.8	22.1	6.3	23.7	6.6	25.1	7.0	26.5
RMS-025	.025	0.64	9.0	34.1	9.9	37.4	10.7	40.4	11.4	43.2	12.1	45.8
RMS-029	.029	0.74	11.6	43.9	12.8	48.4	13.9	52.5	14.9	56.2	15.8	59.7
RMS-033	.033	0.84	14.6	55.1	16.1	61.0	17.5	66.3	18.8	71.1	20.0	75.6
RMS-038	.038	0.97	18.8	71.3	20.9	79.0	22.7	86.0	24.4	92.4	26.0	98.4
RMS-042	.042	1.07	22.7	85.8	25.2	95.3	27.4	103.8	29.5	111.7	31.4	119.0
RMS-046	.046	1.17	26.9	101.8	29.9	113.1	32.6	123.4	35.1	132.8	37.4	141.6
RMS-052	.052	1.32	33.9	128.5	37.8	143.0	41.2	156.1	44.4	168.1	47.4	179.4

FOUR RMS NOZZLES

RMS-025	.025	0.64	6.5	24.6	7.1	26.8	7.6	28.9	8.1	30.7	8.6	32.4
RMS-029	.029	0.74	8.2	31.1	9.0	34.1	9.7	36.9	10.4	39.4	11.0	41.7
RMS-033	.033	0.84	10.2	38.7	11.2	42.5	12.2	46.1	13.0	49.3	13.8	52.3
RMS-038	.038	0.97	13.1	49.4	14.4	54.6	15.6	59.2	16.8	63.5	17.8	67.5
RMS-042	.042	1.07	15.6	59.1	17.3	65.4	18.8	71.1	20.2	76.3	21.5	81.2
RMS-046	.046	1.17	18.4	69.7	20.4	77.3	22.2	84.1	23.9	90.4	25.4	96.3
RMS-052	.052	1.32	23.1	87.6	25.7	97.2	28.0	106.0	30.1	114.0	32.1	121.5

TWO RMS NOZZLES

RMS-033	.033	0.84	5.9	22.2	6.4	24.1	6.8	25.9	7.3	27.5	7.7	29.0
RMS-038	.038	0.92	7.3	27.5	8.0	30.1	8.6	32.5	9.1	34.6	9.7	36.6
RMS-042	.042	1.01	8.6	32.4	9.4	35.5	10.1	38.4	10.8	41.0	11.5	43.4
RMS-046	.046	1.17	10.0	37.7	11.0	41.5	11.9	44.9	12.7	48.1	13.5	51.0
RMS-052	.052	1.32	12.3	46.6	13.6	51.4	14.7	55.8	15.8	59.8	16.8	63.6

*Orifice size (or equivalent for fan types) is denoted in the part number (-018, etc.)

Flow charts on this page are applicable only to the RotoMag X22 tool which uses a portion of the water to provide a bearing for nozzle rotation. Lower flow rates available and are listed in the Product Instructions.

ROTOMAG™ X22 ACCESSORIES

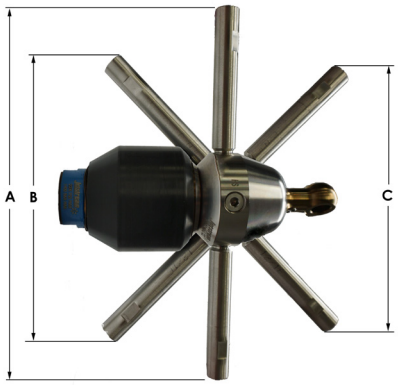

NOZZLE EXTENSIONS

- Available in two connection types and three lengths and can be coupled.
- 52320-XX part numbers for ½”-28 UNEF ports (RotoMag X22)
- 65166-XX part numbers for ¼” NPT ports (RotoMag X22N)
- Puts nozzles closer to the inner surface of large pipes for more effective cleaning.

PART NO.	DIAMETER “A”		DIAMETER “B”		DIAMETER “C”		INDIVIDUAL LENGTH "D"	
	in	mm	in	mm	in	mm	in	mm
52320-05 / 65166-05	5.0	127	4.3	109	4.3	109	1.25	32
52320-10 / 65166-10	10.0	254	7.9	201	7.8	198	3.75	95
52320-15 / 65166-15	15.0	381	11.4	290	11.3	287	6.25	159

REPLACEMENT PARTS (for 52320-XX)	
PART NO.	DESCRIPTION
26759	O-Ring
26871	Vane

NOTE: Diameter includes two extensions plus rotor diameter. Individual length is the length of single extension when installed. When stacking extensions, add individual lengths to “A” dimension to reach desired diameter. New diameter = A + 2*D. Contact Jetstream representative for assistance.

PART NO. 66170

PART NO. 52386

TOW RINGS

- Eye-less tow ring (PN. 66170) standard with all RotoMag assemblies
- Optional tow ring with eye (**PN. 52386**) included in all Premium Kits.

NOZZLE PLUGS

Used to close unused RotoMag nozzle ports.

PART NO.	CONNECTION TYPE
RM-PLUG	1/2"- 28 UNEF (X22)
64682	1/4" NPT Internal Hex (X22N, standard)
JS4F-PLUG	1/4" NPT External Hex (X22N)

REPLACEMENT PARTS

PART NO.	DESCRIPTION
26759	O-Ring

ROTOMAG™ X22 ACCESSORIES

CENTRALIZERS

- Three models are available.
- Supports the tool while providing a controlled, even cleaning along with damage protection.

SKID STYLE

Used in pipes with and without elbows up to 10 in. (250 mm) in diameter.

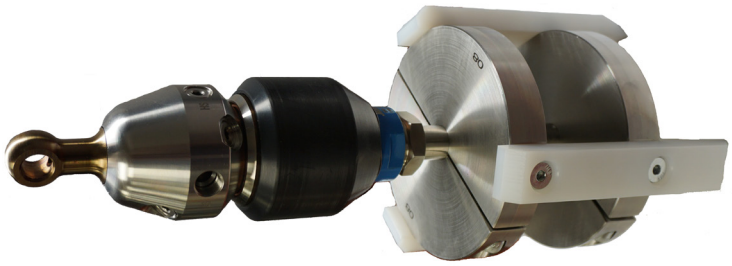

PART NO.	DIAMETER	
	in	mm
63842-ROTO-6	6.0	150
63842-ROTO-8	8.0	200
63842-ROTO-10	10.0	250

NOTE: Does not include nipple or fittings.

RELATED ITEMS

Use 20K fittings listed below and adapt to 15K hose using proper fittings.

PART NO.	DESCRIPTION
29108-08	3/4" MP LH Tube Nipple
28383 (2)	3/4" MP Gland
28384 (2)	3/4" MP Collar

REPLACEMENT RUNNERS

Three plastic runners and six screws.

PART NO.	DIAMETER	
	in	mm
66104-06	6.0	150
66104-08	8.0	200
66104-10	10.0	250

CAGE STYLE

Recommended for navigating complex piping arrangements to clean built up debris.

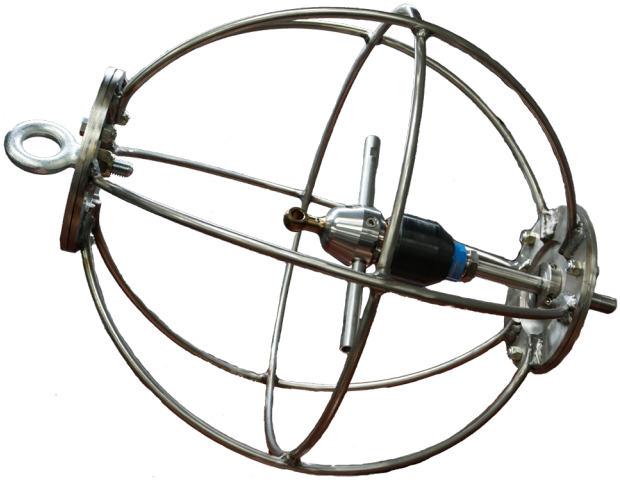

Rotomag X22 shown with optional Nozzle Extensions

PART NO.	DIAMETER	
	in	mm
63843-ROTO	18.75	475

NOTE: Does not include nipple or fittings.

RELATED ITEMS

PART NO.	DESCRIPTION
55450-7	7" long 1/2" NPT Male Nipple
28903	1/2" NPTF x 3/4" MP Male Adapter (Nipple to Tool)
27722 (4)	Capscrew, .25 F x 1.0"

NOTE: 3/4" NPT Nipple WILL NOT fit in cage centralizer because OD is too large. If 1/2" NPT Nipple is used, quantity (4) of capscrew 27722 must be used for the clamps to fit. Hose to nipple adapter may be needed based on end fitting.

ROTOMAG™ X22 ACCESSORIES

SCISSOR STYLE

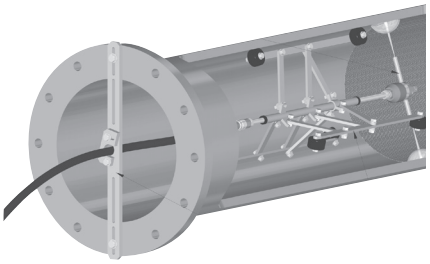

Designed for straight pipe runs only. The adjustable frames allow for an effective pipe clean anywhere from 9-60 inches (230-1500 mm) in diameter. Compatible with most tools. Comes with a central lance (shown below) for mounting tools.

PART NO.	CONNECTION	PRESSURE	WEIGHT	LENGTH
SMALL 9-18" [230-460 mm] PIPE DIAMETER				
64452-S15-8	1/2" NPT	15K PSI	20 lb. (9 kg)	36 in. (915 mm)
64452-S15-12	3/4" NPT	15K PSI	20 lb. (9 kg)	36 in. (915 mm)
MEDIUM 13-40" [330-1000mm] PIPE DIAMETER				
64452-M15-8	1/2" NPT	15K PSI	32 lb. (15 kg)	48 in. (1220 mm)
64452-M15-12	3/4" NPT	15K PSI	32 lb. (15 kg)	48 in. (1220 mm)
LARGE 16-60" [410-1500 mm] PIPE DIAMETER				
64452-L15-8	1/2" NPT	15K PSI	40 lb. (18 kg)	72 in. (1850 mm)
64452-L15-12	3/4" NPT	15K PSI	40 lb. (18 kg)	72 in. (1850 mm)

THE WARDEN™

Backout preventers are safety devices that mount to pipe flanges to prevent the RotoMag from backing out in the event of an unexpected and sudden shift in thrust that could result in injury to operators. Fits around hoses from 1/4″ to 1″ I.D. **Part No. 61447**

SWIVEL X15
PIPE CLEANING SWIVEL TOOL

The Jetstream Swivel X15 is a self-powered, 360° rotating swivel tool designed for cleaning medium to large diameter pipes.

- Rotational speed of the nozzle head is controlled by the internal oil pump assembly on the swivel
- Up to six flush mounted P4TC or standard HHTC0 nozzles
- Stainless steel swivel and head with flows up to 50 gpm (189.2 lpm). Flow rate calculated by multiplying number of nozzles used by the flow rate given on page G-33.
- Uses two, four or six nozzles
- Typical seal and oil life over 100 hours
- No Silicone needed
- Low seal replacement cost and quick change, with the seal shaft and cartridge all in one piece
- Speed adjustment without oil change or spillage
- **Premium Kits (PNs. 64234-XXXXX)** and **Starter Kits (PNs. 64233-XXXXX)**, available for full product tools. Each kit contains one of the available nozzle holder configurations shown below.
- **Oil Kit (PN. 64180)** and **Rebuild Kit (PN. 64247)** available for full servicing tools.

PART NO.	INLET CONNECTION*	SPEED RANGE	DIAMETER		ASSEMBLY LENGTH		ASSEMBLY WEIGHT		MAX. FLOW RATE		MAX.OPERATING PRESSURE	
		RPM	in	mm	in	mm	lbs	kg	gpm	lpm	psi	bar
52820**	3/4" NPT Female	50-1000	3-5/8"	92	9.5	241	11	5	50	189	15,000	1034

*See details on all connection types in Section I.
**Swivel only, no nozzle holder. See below for available nozzle holder configurations.

NOZZLE HOLDERS

PART NO.	NUMBER OF PORTS	HEAD STYLE	ORIFICE SIZE
52963	6	R44	1/4" NPT
65162	6	R44	3/4" ORS
65323	7	R44	1/4" NPT
65326	6	R22	1/4" NPT
65327	6	R22	3/4" ORS
65328	7	R22	1/4" NPT

Part No. 65162

Part No. 65328

15,000 PSI (1,034 BAR)

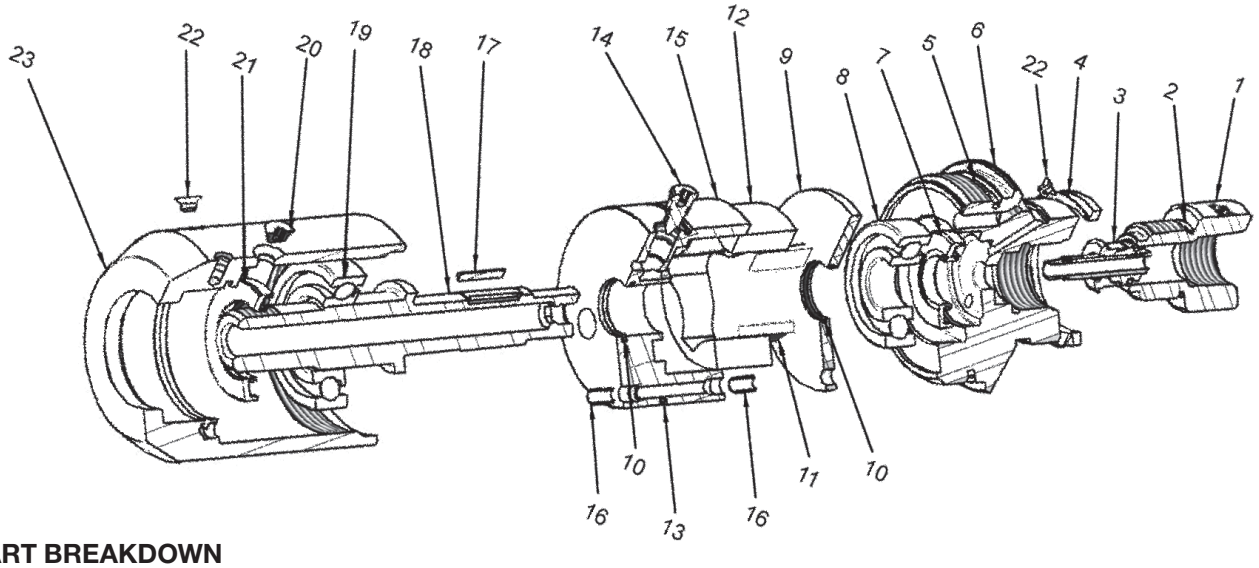

PART BREAKDOWN

ITEM	PART NO.	DESCRIPTION	ITEM	PART NO.	DESCRIPTION	ITEM	PART NO.	DESCRIPTION
1	53397	Seal Cap	11	52762	Inner Rotor	21	27043	Outer Oil Seal
2	25229	O-Ring	12	27040	Outer Rotor	22	64054	Seal Screw
3	53410	15K Seal Assy	13	27204	O-Ring	23	52753	Swivel Body
4	27042	V-ring Seal	14	52757	Speed Adjustment Screw	24*	64180	Oil Kit, 6 oz.
5	65816	O-Ring	15	52764	Oil Pump Body	25**	66199	Syringe Assy
6	53395	Swivel Cap	16	52958	Hollow Dowel	26**	Various***	Nozzle Holder
7	27044	Inner Oil Seal	17	27038	Dowel Pin	27**	52965	Tow Ring
8	27048	Radial Bearing	18	53398	Swivel Shaft	28**	65978	Plug
9	52756	Pump Cover Plate	19	27049	Thrust Bearing			
10	27046	O-Ring	20	52819	Seal Screw			

*Not Shown **Only included with kits. ***See table on previous page.

SWIVEL X15 ACCESSORIES

TOW RING (PN. 52965)

PLUG (PN. 65978)

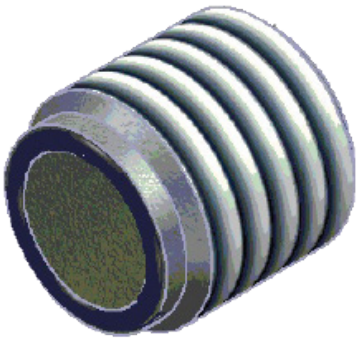

NOZZLE EXTENSIONS

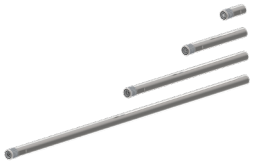

PART NO.	LENGTH (in.)
65456-01	1
65456-02	2
65456-06	6
65456-12	12
65456-24	24
65456-30	30
65456-36	36
65456-42	42

SWIVEL X15 ACCESSORIES

CENTRALIZERS

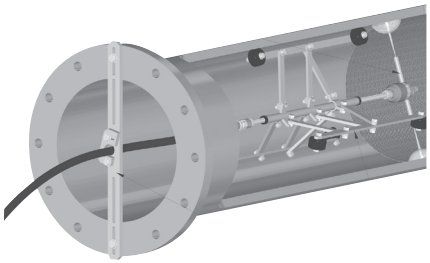

- Three models are available.
- Supports the tool while providing a controlled, even cleaning along with damage protection.

SKID STYLE

Used in pipes with and without elbows up to 10 in. (250 mm) in diameter.

PART NO.	DIAMETER	
	in	mm
63842-SWVL-6	6.0	150
63842-SWVL-8	8.0	200
63842-SWVL-10	10.0	250

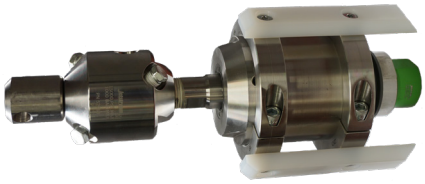

REPLACEMENT RUNNERS

Three plastic runners and six screws.

PART NO.	DIAMETER	
	in	mm
66104-06	6.0	150
66104-08	8.0	200
66104-10	10.0	250

CAGE STYLE

Recommended for navigating complex piping arrangements to clean built up debris.

PART NO.	DIAMETER	
	in	mm
63843-SWVL	18.75	475

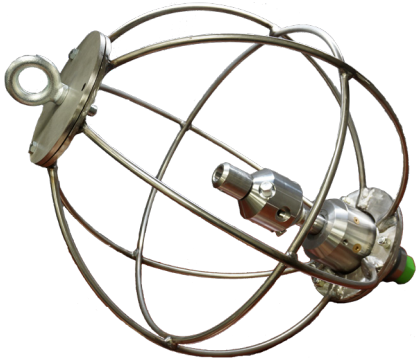

SCISSOR STYLE

Designed for straight pipe runs only. The adjustable frames allow for an effective pipe clean anywhere from 9-60 inches (230-1500 mm) in diameter. Compatible with most tools. Comes with a central lance (shown below) for mounting tools.

PART NO.	CONNECTION	PRESSURE	WEIGHT	LENGTH
SMALL 9-18" [230-460 mm] PIPE DIAMETER				
64452-S15-8	1/2" NPT	15K PSI	20 lb. (9 kg)	36 in. (915 mm)
64452-S15-12	3/4" NPT	15K PSI	20 lb. (9 kg)	36 in. (915 mm)
MEDIUM 13-40" [330-1000mm] PIPE DIAMETER				
64452-M15-8	1/2" NPT	15K PSI	32 lb. (15 kg)	48 in. (1220 mm)
64452-M15-12	3/4" NPT	15K PSI	32 lb. (15 kg)	48 in. (1220 mm)
LARGE 16-60" [410-1500 mm] PIPE DIAMETER				
64452-L15-8	1/2" NPT	15K PSI	40 lb. (18 kg)	72 in. (1850 mm)
64452-L15-12	3/4" NPT	15K PSI	40 lb. (18 kg)	72 in. (1850 mm)

H_3ORBITER™
3-D CLEANING TOOL

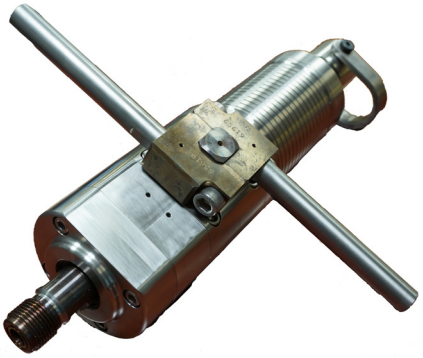

The H_3Orbiter (H_3O) is a 3-D waterblasting tool designed to effectively and efficiently clean tanks and vessels. The rotation of the nozzles and body allow the tool to perform a complete 360 degree clean at pressures up to 22,000 psi (1500 bar). Flow rates required are controllled through four different manifold options that provide 10 to 80 gpm (37 to 302 lpm): High Flow, Medium Flow, Low Flow, and Extra Low Flow. A maintenance-free magnetic brake is used to control rotation speed.

- Made from stainless steel
- Enhanced components for longer life
- Rotational speed controlled by a maintenance-free magnetic brake
- Four manifolds offered for application precision: High (50 to 80 gpm), Medium (28 to 55 gpm), Low (16 to 30 gpm), and Extra Low Flow (10 to 18 gpm)
- Wide range of accessories are available including cage centralizers and extensions. Only 1” or 2” extensions can be used when the H3Orbiter is installed in the centralizer.
- For pipe cleaning, the H_3Orbiter can be placed in a centralizer with an optional kick plate. When installed with the centralizer, the kick plate allows for self generated forward movement with each 180° rotation of the manifold.
- A **Premium Kit** (**PN. 65634**) and **Starter Kits** (**PN. 65633-XXX**; XXX designates the manifold flow rate) are available for full product tools.
- Premium kit includes the adapters listed in the table below:

Premium Kit (Part No. 65634).

PART NO.	DESCRIPTION
28335	1" MP Male x 1/2" NPT Male
28433	1" MP Male x 1" Type M Male

- A Tool Kit (**PN. 66339**) is available for full servicing tools.

PART NO.	CONNECTION* (MALE)	SPEED RANGE	DIAMETER		ASSEMBLY LENGTH		ASSEMBLY WEIGHT		MAX. FLOW RATE		MAX.OPERATING PRESSURE	
		RPM	in	mm	in	mm	lbs	kg	gpm	lpm	psi	bar
65367	1-1/8" ORS Male	Adjustable; 8-50 rpm	4	100	16.65	423	35	16	80	307	22,000	1500

*Shaft on tool is a 1-1/8" ORS Male connection. Inlet connection is made with female x female adapter, which is not included with the tool. Inlet adapters are listed in the table below. See details on all connection types in Section I.

INLET ADAPTERS

PART NO.	DESCRIPTION
65664	3/4" MP Female
65665	1" MP Female
65666	3/4" NPT Female
65667	1" NPT Female
65233	Replacement O-Ring

1" MP Female (Part No. 65665).

1" NPT Female (Part No. 65667).

MANIFOLD ASSEMBLY

There are four manifold options depending on required flow rate. Consult charts in the Product Instructions/Quick Start Guide to select the correct manifold.

PART NO.	FLOW RATE		DESIGNATION (-xxx)
	gpm	lpm	
65675	50-80	189-303	-030 (R30)
65676	28-55	106-208	-050 (R50)
65677	16-30	61-114	-090 (R90)
65678	10-18	38-68	-150 (R150)

TOW RING (PART NO. 65729)

NOZZLE EXTENSIONS

PART NO.	LENGTH (in.)
65456-01	1
65456-02	2
65456-06	6
65456-12	12
65456-24	24
65456-30	30
65456-36	36
65456-42	42

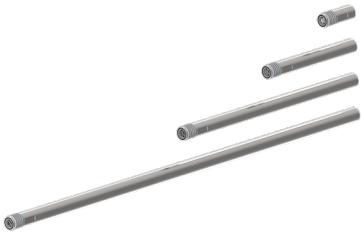

CENTRALIZER (PN. 63843-H3O)

(shown with H_3Orbiter and optional Kick Plate Assy)

H_3ORBITER™ MAIN ASSEMBLY

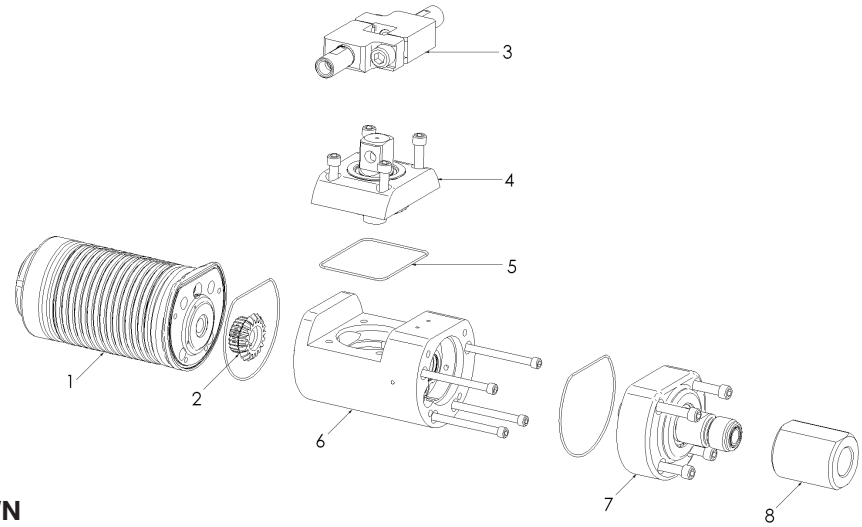

OPTIONAL KICK PLATE ASSY (PN. 66139)

PART BREAKDOWN

ITEM	PART NO.	DESCRIPTION	ITEM	PART NO.	DESCRIPTION
1	66359	Brake Assy	4	66358	Elbow Assy
2	Various*	Manifold Assy	5	66360	Inlet Assy
3	66361	Cross Shaft Assy	6	Various**	Inlet Adapter

*See table above. ** See table on page G-26.

H_3ORBITER™ CROSS SHAFT ASSEMBLY (PART NO. 66361)
PART BREAKDOWN

ITEM	PART NO.	DESCRIPTION
1	65240	Capscrew
2	65229	Retaining Ring
3	65220	Oil Seal, Double Lip
4	65410	Output Shaft Cover
5	65454	O-Ring
6	65215	Ball Bearing, Angular Contact
7	65292	Gear, Bevel
8	65298	Discarge Shaft
9	65645	Seal Assy, Swivel
10	65463	Seat, Carbide
11	65214	Ball Bearing, Deep Groove
12	65230	Retaining Ring
13	65221	Oil Seal, Single Lip

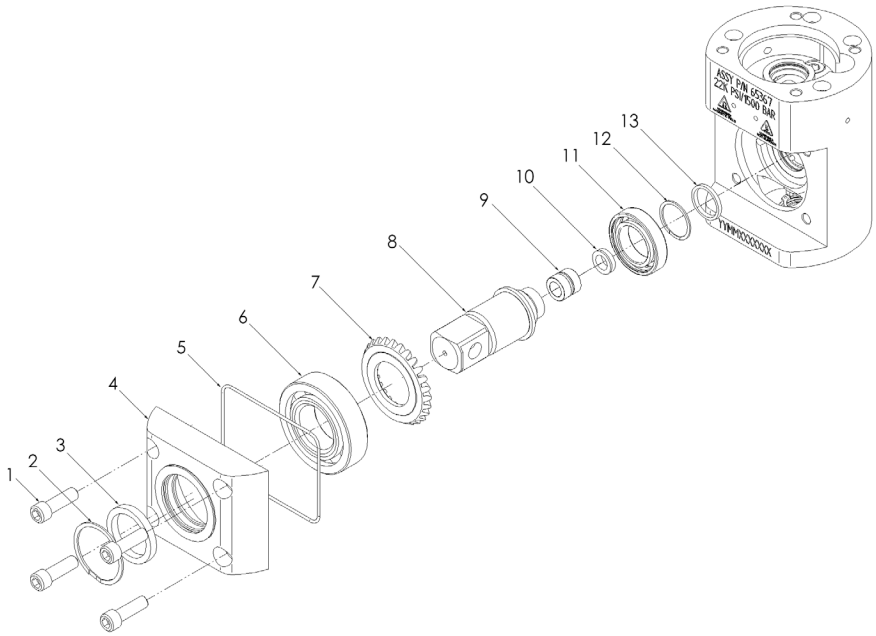

H_3ORBITER INLET ASSEMBLY (PART NO. 66360)
PART BREAKDOWN

ITEM	PART NO.	DESCRIPTION
1	65239	Capscrew
2	65229	Retaining Ring
3	65220	Oil Seal, Double Lip
4	27492	Grease Zerk
5	65409	Inlet Cap
6	65226	Retaining Ring
7	65217	Ball Bearing, Deep Groove
8	65215	Ball Bearing, Angular Contact
9	65290	Gear, Spur
10	65233	O-Ring
11	65297	Inlet Shaft
12	65645	Seal Assy, Swivel
13	65463	Seat, Carbide
14	65333	Elbow Body

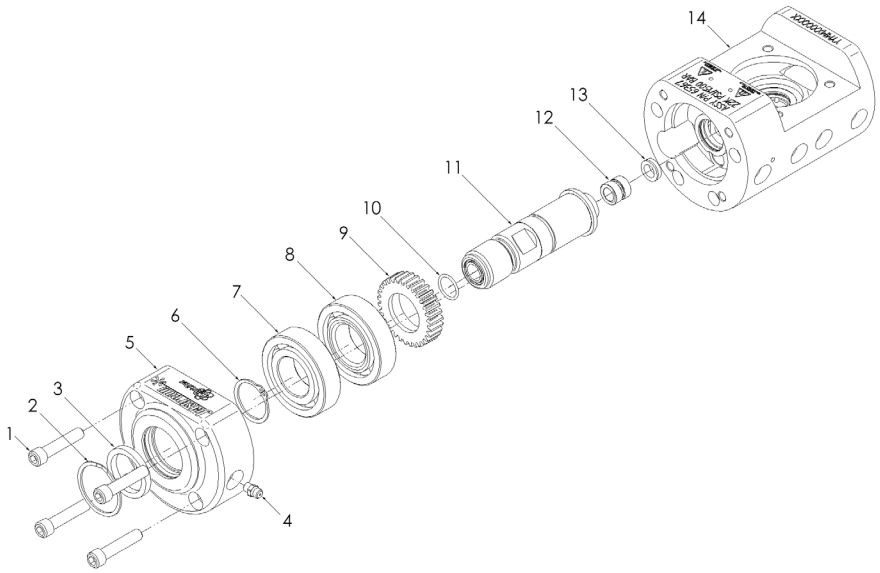

H_3ORBITER™
BRAKE ASSEMBLY
(PART NO. 66359)

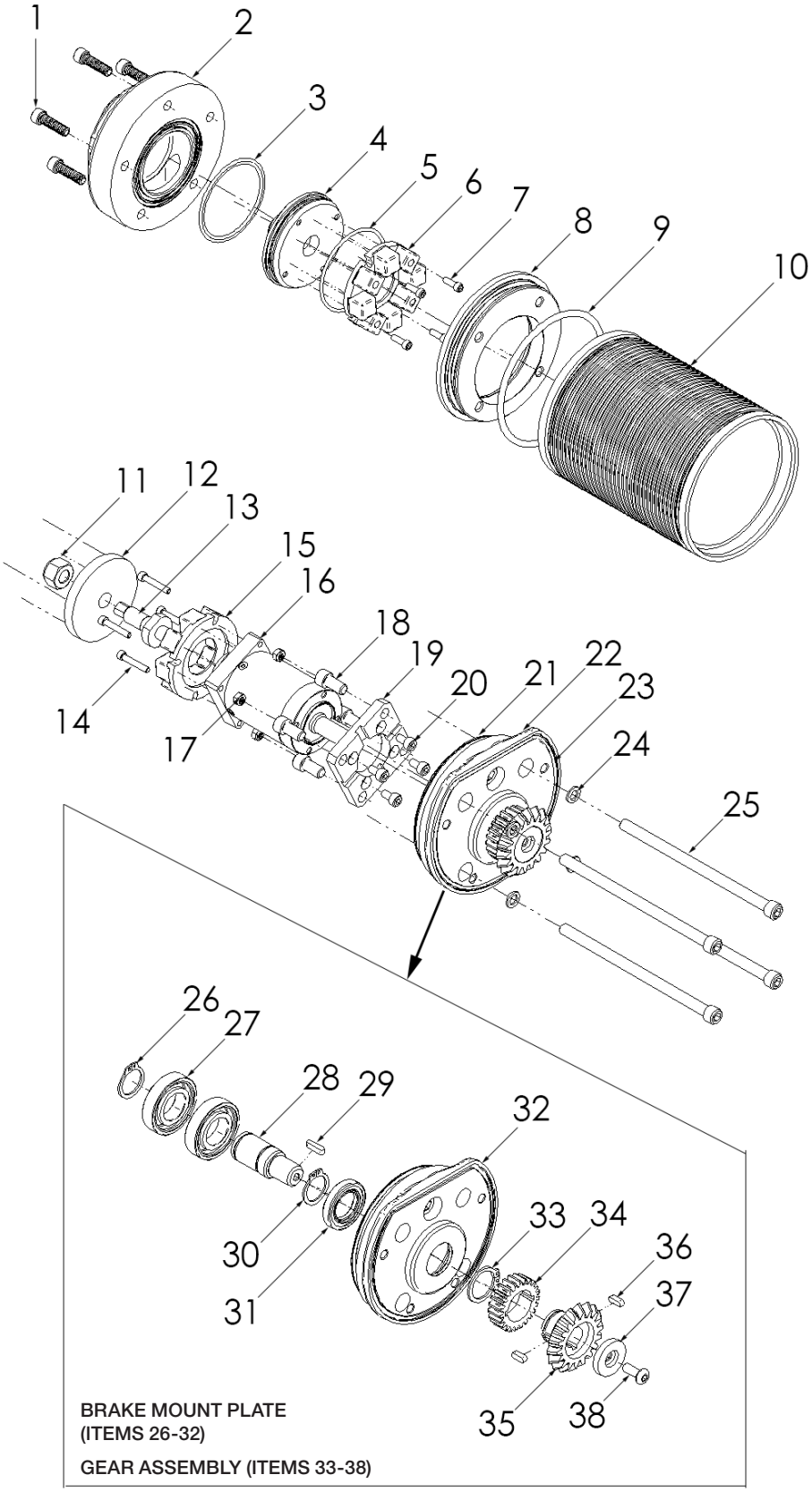

PART BREAKDOWN

ITEM	PART NO.	DESCRIPTION	ITEM	PART NO.	DESCRIPTION
1	65453	Capscrew	20	65242	Capscrew
2	65414	Cap, Pulling Ring	21	65816	O-Ring
3	57927 / 65234	O-Rings	22	65411	Brake Mount Plate
4	65415	Cap, Speed Adjust	23	65454	O-Ring
5	57927	O-Ring	24	65247	Copper Seal Washer
6	65455	Magnetic Brake Assy 1	25	65452	Capscrew
7	65243	Capscrew	26	65227	Retaining Ring
8	65413	Lower Brake Cover	27	65216	Ball Bearing, Deep Groove
9	65816	O-Ring	28	65416	Brake Input Shaft
10	65412	Brake Housing	29	65238	Key
11	25296	Nut	30	65227	Retaining Ring
12	65420	Brake Rotor	31	65219	Oil Seal, Double Lip
13	65419	Shaft, Brake Rotor	32	65411	Brake Mount Plate
14	65244	Capscrew	33	65228	Retaining Ring
15	65455	Magnetic Brake Assy 2	34	65289	Brake Spur Gear
16	65213	Gearbox	35	65293	Brake Bevel Gear
17	65246	Nut	36	65237	Key
18	25782	Capscrew	37	65421	Gearbox Input Retainer
19	65417	Gearbox Adapter Plate	38	65245	Capscrew

H_3ORBITER™
MANIFOLD ASSEMBLY

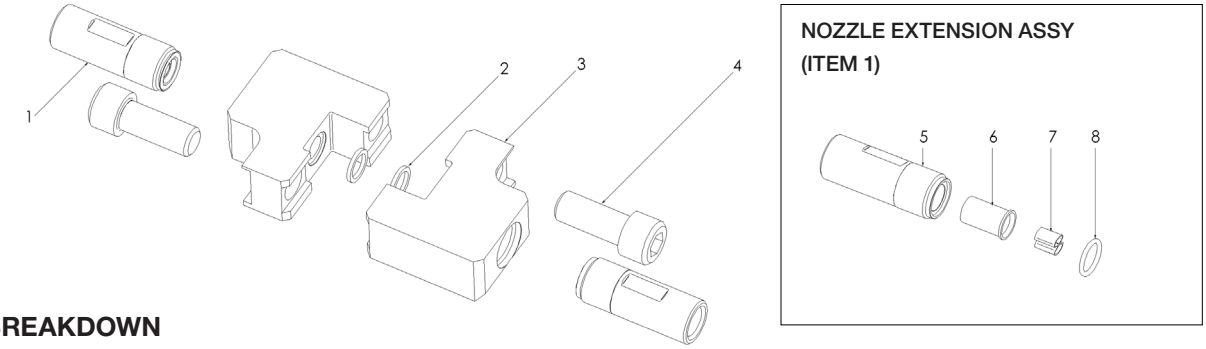

PART BREAKDOWN

ITEM	PART NO.	DESCRIPTION	ITEM	PART NO.	DESCRIPTION
1	65456-XX	Nozzle Extension Assy	5	65300-XX	Nozzle Extension
2	65402	HP Manifold Seal	6	65301	Flow Straightener Insert
3	Various	Half Manifold	7	26871	Vane
4	65250	Capscrew	8	65236	O-Ring

H_3ORBITER
ELBOW ASSEMBLY (PART NO. 66358)

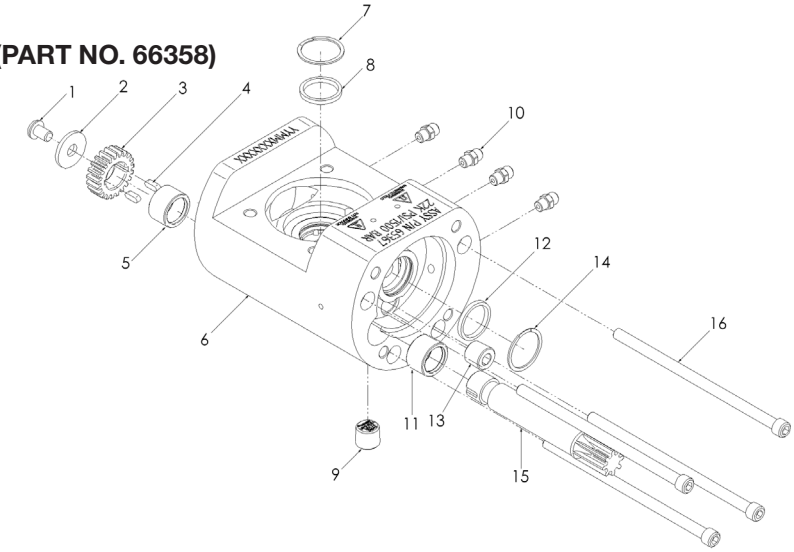

PART BREAKDOWN

ITEM	PART NO.	DESCRIPTION	ITEM	PART NO.	DESCRIPTION
1	25782	Capscrew	9	64682	Plug
2	65248	Flat Washer	10	27492	Grease Zerk
3	65207	Change Gear	11	65218	Needle Bearing
4	65237	Key	12	65221	Oil Seal, Single Lip
5	65218	Needle Bearing	13	64682	Plug
6	65333	Elbow Body	14	65230	Retaining Ring
7	65230	Retaining Ring	15	65291	Shaft, Pinion
8	65221	Oil Seal, Single Lip	16	65241	Capscrew

REPLACEABLE NOZZLE TIPS—QUICK REFERENCE CHART

NOZZLE SIDE VIEW	NOZZLE	CONNECTION*	TYPE/USE	ORIFICE MATERIAL	PATTERNS	PAGE
	HHTC0/ HHTC15/ HHTC25/ HHTC50	1/4″ NPT Male	Hard Hitter	Tungsten Carbide	Straight 15° Fan 25° Fan 50° Fan	G-36
	HHS0	1/4″ NPT Male	Hard Hitter	Sapphire	Straight	G-37
	P4TC	1/4″ NPT Male	Low Profile	Tungsten Carbide	Straight	G-38
	P2TC	1/8″ NPT Male	Low Profile	Tungsten Carbide	Straight	G-38
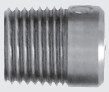	**P2TCS**	1/8" NPT Male	Low Profile	Tungsten Carbide	Straight	G-10
	JS2	1/8″ NPT Male	Low Profile	Stainless Steel	Straight	G-39
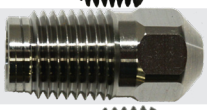	**JS4**	1/4" NPT Male	Hard Hitter	Stainless Steel	Straight	G-40
	JS4F	1/4" NPT Male	Low Profile	Stainless Steel	Straight	G-40
	P1	1/16″ NPT Male	Low Profile	Stainless Steel	Straight	G-37
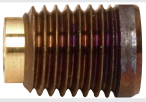	**P1S0**	1/16″ NPT Male	Low Profile	Sapphire	Straight	G-41
	OX	3/8" - 24UNEF	Orbi-Jet™ X22	Tungsten Carbide	Straight	G-3
	UHPX	3/8″ - 24UNF	Orbi-Jet™ X22	Sapphire	Straight	G-4
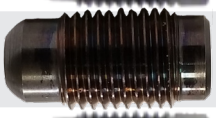	**UHPXi**	3/8" - 24 UNF	Orbi-Jet™ X22	Sapphire	Straight	G-4
	UHPXD	3/8" - 24 UNF	Orbi-Jet™ X22	Synthetic Diamond	Straight	G-4
	RM	1/2″ - 28UNEF	RotoMag™ X22	Tungsten Carbide	Straight	G-41
	RMS	1/2″ - 28UNEF	RotoMag™ X22	Sapphire	Straight	G-42

*See details on all connection types in Section I.

REPLACEABLE NOZZLE TIPS

CARBIDE ORIFICES GROUP A

HHTC
(PAGE G-36)

P4TC
(PAGE G-38)

P2TC
(PAGE G-38)

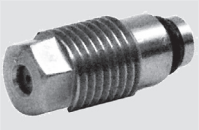

OX
(PAGE G-3)

RM*
(PAGE G-41)

ORIFICE SIZE*		FLOW AT SPECIFIED PRESSURES (PSI / BAR)																AVAILABLE SERIES				
in	mm	5,000 gpm	344 lpm	6,000 gpm	413 lpm	8,000 gpm	551 lpm	10,000 gpm	689 lpm	11,000 gpm	758 lpm	12,000 gpm	827 lpm	14,000 gpm	965 lpm	15,000 gpm	1034 lpm	HHTC	P4TC	P2TC	OX	RM
.018	0.46	.6	2.2	.7	2.6	.8	3.0	.9	3.4	.9	3.4	1.0	3.7	1.0	3.7	1.1	4.1	•	•	•	•	•
.025	0.64	1.2	4.5	1.3	4.9	1.5	5.6	1.7	6.4	1.8	6.8	1.8	6.8	2.0	7.5	2.1	7.9	•			•	
.029	0.74	1.6	6.0	1.8	6.8	2.1	7.9	2.3	8.7	2.4	9.0	2.5	9.4	2.7	10.2	2.8	10.6	•	•	•	•	•
.033	0.84	2.1	7.9	2.3	8.7	2.6	9.8	2.9	10.9	3.1	11.7	3.2	12.1	3.5	13.2	3.6	13.6	•			•	
.038	0.97	2.8	10.6	3.0	11.3	3.5	13.2	3.9	14.7	4.1	15.5	4.3	16.2	4.6	17.4	4.8	18.1	•	•	•	•	•
.042	1.07	3.4	12.8	3.7	14.0	4.3	16.2	4.8	18.1	5.0	18.9	5.2	19.6	5.6	21.2	5.8	21.9	•	•	•	•	•
.046	1.17	4.0	15.1	4.4	16.6	5.1	19.3	5.7	21.5	6.0	22.7	6.3	23.8	6.8	25.7	7.0	26.5	•			•	
.055	1.40	5.8	21.9	6.3	23.8	7.3	27.6	8.2	31.0	8.6	32.5	8.9	33.6	9.7	36.7	10.0	37.8	•				
.063	1.60	7.6	28.7	8.3	31.4	9.6	36.3	10.7	40.5	11.2	42.4	11.7	44.2	12.7	48.0	13.1	49.5	•	•	•		•
.067	1.70	8.6	32.5	9.4	35.5	10.8	40.8	12.1	45.8	12.7	48.0	13.3	50.3	14.3	54.1	14.8	56.0	•	•	•		•
.070	1.78	9.4	35.5	10.2	38.6	11.8	44.6	13.2	49.9	13.9	52.6	14.5	54.8	15.7	59.4	16.2	61.3	•				
.073	1.85	10.2	38.6	11.1	42.0	12.9	48.8	14.4	54.5	15.1	57.1	15.8	59.8	17.0	64.3	17.6	66.6	•	•	•		•
.078	1.98	11.6	43.9	12.7	48.0	14.7	55.6	16.4	62.0	17.2	65.1	18.0	68.1	19.4	73.4	20.1	76.0	•	•	•		•
.081	2.06	12.5	47.3	13.7	51.8	15.8	59.8	17.7	67.0	18.6	70.4	19.4	73.4	21.0	79.4	21.7	82.1	•				
.089	2.26	15.1	57.1	16.6	62.8	19.1	72.3	21.4	81.0	22.4	84.7	23.4	88.5	25.3	95.7	26.2	99.1	•				
.093	2.36	16.5	62.4	18.1	68.5	20.9	79.1	23.4	88.5	24.5	92.7	25.6	96.9	27.6	104.5	40.0	151.4	•		•		
.110	2.79	23.1	87.4	25.3	95.7	29.2	110.5	32.7	123.8	34.3	129.8	35.8	135.5	38.7	146.5	51.7	195.7	•		•		•
.125	3.18	29.8	112.8	32.7	123.8	37.7	142.7	42.2	159.7	44.2	167.3	46.2	174.9	49.9	188.9	51.7	195.7	•		•		

*Orifice size (or equivalent for fan types) is denoted in the part number (-018, etc.)

REPLACEABLE NOZZLE TIPS

SAPPHIRE ORIFICES

HHS0
(PAGE G-37)

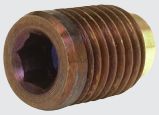

P1S0
(PAGE G-41)

RMS*
(PAGE G-42)

ORIFICE SIZE*		FLOW AT SPECIFIED PRESSURES (PSI / BAR)																AVAILABLE SERIES		
in	mm	5,000 gpm	344 lpm	6,000 gpm	413 lpm	8,000 gpm	551 lpm	10,000 gpm	689 lpm	11,000 gpm	758 lpm	12,000 gpm	827 lpm	14,000 gpm	965 lpm	15,000 gpm	1034 lpm	HHS0	P1S0	RMS
.018	0.46	.5	1.8	.5	1.8	.6	2.2	.6	2.2	.7	2.6	.7	2.6	.8	3.0	.8	3.0		•	•
.025	0.64	0.9	3.4	1.0	3.7	1.1	4.1	1.3	4.9	1.3	4.9	1.4	5.3	1.5	5.6	1.5	5.6		•	•
.029	0.74	1.2	4.5	1.3	4.9	1.5	5.6	1.7	6.4	1.8	6.8	1.9	7.1	2.0	7.5	2.1	7.9	•	•	•
.033	0.84	1.5	5.6	1.7	6.4	1.9	7.1	2.2	8.3	2.3	8.7	2.4	9.0	2.6	9.8	2.7	10.2		•	•
.038	0.97	2.0	7.5	2.2	8.3	2.6	9.8	2.9	10.9	3.0	11.3	3.2	12.1	3.4	12.8	3.5	13.2	•	•	•
.042	1.07	2.5	9.4	2.7	10.2	3.2	12.1	3.5	13.2	3.7	14.0	3.9	14.7	4.2	15.9	4.3	16.2	•	•	•
.046	1.17	3.0	11.3	3.3	12.4	3.3	12.4	4.2	15.9	4.4	16.6	4.6	17.4	5.0	18.9	5.2	19.6		•	•
.055	1.32	3.8	14.3	4.2	15.9	4.8	18.1	5.4	20.4	5.7	21.5	5.9	22.3	6.4	24.2	6.6	24.9			

STAINLESS STEEL ORIFICES GROUP A

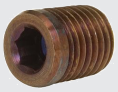

P1
(PAGE G-37)

ORIFICE SIZE*		FLOW AT SPECIFIED PRESSURES (PSI / BAR)															
in	mm	5,000 gpm	344 lpm	6,000 gpm	413 lpm	8,000 gpm	551 lpm	10,000 gpm	689 lpm	11,000 gpm	758 lpm	12,000 gpm	827 lpm	14,000 gpm	965 lpm	15,000 gpm	1034 lpm
.038	0.97	2.0	7.5	2.2	8.3	2.5	9.4	2.8	10.6	3.0	11.3	3.1	11.7	3.3	12.4	3.4	12.8
.042	1.07	2.4	9.0	2.7	10.2	3.1	11.7	3.4	12.8	3.6	13.6	3.8	14.3	4.1	15.5	4.2	15.9
.046	1.17	2.9	10.9	3.2	12.1	3.7	14.0	4.1	15.5	4.3	16.2	4.5	17.0	4.9	18.5	5.1	19.3
.055	1.40	4.2	15.9	4.6	17.4	5.3	20.0	5.9	22.3	6.2	23.4	6.5	24.6	7.0	26.5	7.2	27.2
.063	1.60	5.5	20.8	6.0	22.7	6.9	26.1	7.7	29.1	8.1	30.6	8.5	32.1	9.2	34.8	9.5	35.9
.067	1.70	6.2	23.4	6.8	25.7	7.8	29.5	8.8	33.3	9.2	34.8	9.6	36.3	10.4	39.3	10.7	40.5
.070	1.78	6.8	25.7	7.4	28.0	8.5	32.1	9.6	36.3	10.0	37.8	10.5	39.7	11.3	42.7	11.7	44.2
.073	1.85	7.3	27.6	8.0	30.2	9.3	35.2	10.4	39.3	10.9	41.2	11.4	43.1	12.3	46.5	12.7	48.0
.078	1.98	8.4	31.8	9.2	34.8	10.6	40.1	11.9	45.0	12.4	46.9	13.0	49.2	14.0	53.0	14.5	54.8
.093	2.36	11.9	45.0	13.1	49.5	15.1	57.1	16.9	63.9	17.7	67.0	18.5	70.0	20.0	75.7	20.7	78.3
.110	2.79	16.7	63.2	18.3	69.2	21.1	79.8	23.6	89.3	24.7	93.5	25.8	97.6	27.9	105.6	28.9	109.4

*Orifice size (or equivalent for fan types) is denoted in the part number (-018, etc.)

REPLACEABLE NOZZLE TIPS

STAINLESS STEEL ORIFICES GROUP B

JS2
(PAGE G-39)

JS4
(PAGE G-40)

JS4F
(PAGE G-40)

ORIFICE SIZE*		FLOW AT SPECIFIED PRESSURES (PSI / BAR)																AVAILABLE SERIES		
in	mm	5,000 gpm	344 lpm	6,000 gpm	413 lpm	8,000 gpm	551 lpm	10,000 gpm	689 lpm	11,000 gpm	758 lpm	12,000 gpm	827 lpm	14,000 gpm	965 lpm	15,000 gpm	1034 lpm	JS2	JS4	JS4F
0.018	0.46	0.6	2.2	0.7	2.6	0.8	3.0	0.9	3.4	0.9	3.4	1.0	3.7	1.0	3.7	1.1	4.1	•	•	•
0.020	0.51	0.8	2.9	0.8	3.2	1.0	3.7	1.1	4.1	1.1	4.3	1.2	4.5	1.3	4.8	1.3	5.0	•	•	•
0.022	0.56	0.9	3.5	1.0	3.8	1.2	4.4	1.3	5.0	1.4	5.2	1.4	5.4	1.5	5.9	1.6	6.1	•	•	•
0.024	0.61	1.2	4.5	1.3	4.9	1.5	5.6	1.7	6.4	1.8	6.8	1.8	6.8	2.0	7.5	2.1	7.9	•	•	•
0.026	0.66	1.3	4.9	1.4	5.4	1.6	6.2	1.8	6.9	1.9	7.3	2.0	7.6	2.2	8.2	2.2	8.5	•	•	•
0.029	0.74	1.6	6.0	1.8	6.8	2.1	7.9	2.3	8.7	2.4	9.0	2.5	9.4	2.7	10.2	2.8	10.6	•	•	•
0.032	0.81	2.1	7.9	2.3	8.7	2.6	9.8	2.9	10.9	3.1	11.7	3.2	12.1	3.5	13.2	3.6	13.6	•	•	•
0.035	0.89	2.3	8.9	2.6	9.7	3.0	11.2	3.3	12.5	3.5	13.1	3.6	13.7	3.9	14.8	4.1	15.4	•	•	•
0.038	0.97	2.8	10.6	3.0	11.3	3.5	13.2	3.9	14.7	4.1	15.5	4.3	16.2	4.6	17.4	4.8	18.1	•	•	•
0.042	1.07	3.4	12.8	3.7	14.0	4.3	16.2	4.8	18.1	5.0	18.9	5.2	19.6	5.6	21.2	5.8	21.9	•	•	•
0.047	1.19	4.2	16.0	4.6	17.5	5.3	20.2	6.0	22.6	6.3	23.7	6.5	24.8	7.1	26.7	7.3	27.7	•	•	•
0.052	1.32	5.2	19.6	5.7	21.4	6.5	24.7	7.3	27.7	7.7	29.0	8.0	30.3	8.6	32.7	8.9	33.9	•	•	•
0.057	1.45	6.2	23.5	6.8	25.8	7.8	29.7	8.8	33.2	9.2	34.9	9.6	36.4	10.4	39.3	10.7	40.7	•	•	•
0.063	1.60	7.6	28.7	8.3	31.4	9.6	36.3	10.7	40.5	11.2	42.4	11.7	44.2	12.7	48.0	13.1	49.5	•	•	•
0.069	1.75	9.1	34.4	10.0	37.7	11.5	43.6	12.9	48.7	13.5	51.1	14.1	53.4	15.2	57.6	15.7	59.7	•	•	•
0.075	1.91	10.7	40.7	11.8	44.6	13.6	51.5	15.2	57.6	15.9	60.4	16.6	63.1	18.0	68.1	18.6	70.5	•	•	•
0.082	2.08	12.8	48.7	14.1	53.3	16.2	61.5	18.2	68.8	19.0	72.2	19.9	75.4	21.5	81.4	22.2	84.3	•	•	•
0.090	2.29	15.5	58.6	16.9	64.2	19.6	74.1	21.9	82.9	22.9	86.9	24.0	90.8	25.9	98.1	26.8	101.5	•	•	•
0.098	2.49	18.3	69.5	20.1	76.1	23.2	87.9	25.9	98.3	27.2	103.1	28.4	107.7	30.7	116.3	31.8	120.4	•	•	•
0.106	2.69	21.5	81.3	23.5	89.1	27.1	102.8	30.3	115.0	31.8	120.6	33.2	126.0	35.9	136.0	37.2	140.8	•	•	•
0.110	2.79	23.1	87.4	25.3	95.7	29.2	110.5	32.7	123.8	34.3	129.8	35.8	135.5	38.7	146.5	40.0	151.6	•		
0.115	2.92	25.2	95.7	27.7	104.8	31.9	121.0	35.7	135.3	37.5	141.9	39.1	148.2	42.2	160.1	43.7	165.7	•	•	•
0.125	3.18	29.8	112.8	32.7	123.8	37.7	142.7	42.2	159.7	44.2	167.3	46.2	174.9	49.9	188.9	51.7	195.8	•	•	•
0.135	3.43	34.8	131.9	38.1	144.5	44.0	166.8	49.2	186.5	51.6	195.6	53.9	204.3	58.2	220.7	60.3	228.4	•	•	•
0.145	3.68	40.1	152.1	44.0	166.7	50.8	192.4	56.8	215.1	59.5	225.6	62.2	235.7	67.2	254.6	69.5	263.5	•	•	•
0.155	3.94	45.9	173.8	50.2	190.4	58.0	219.9	64.9	245.8	68.0	257.8	71.1	269.3	76.8	290.9	79.4	301.1		•	•
0.165	4.19	52.0	197.0	56.9	215.8	65.7	249.2	73.5	278.6	77.1	292.2	80.5	305.2	87.0	329.6	90.0	341.2		•	•

*Orifice size (or equivalent for fan types) is denoted in the part number (-018, etc.)

NOZZLE NUMBER CROSS-REFERENCE CHART

No.	in	mm
000	.018	0.46
00	.025	0.64
0	.029	0.74
1	.033	0.84
2	.038	0.97

No.	in	mm
3	.042	1.07
4	.046	1.17
5	.055	1.40
6	.063	1.60
7	.067	1.70

No.	in	mm
8	.070	1.78
9	.073	1.85
10	.078	1.98
12	.081	2.06
14	.089	2.26

No.	in	mm
15	.093	2.36
20	.110	2.79
30	.125	3.18

REPLACEABLE NOZZLE TIPS

HHTC NOZZLES FOR DURASAFE HAND GUNS

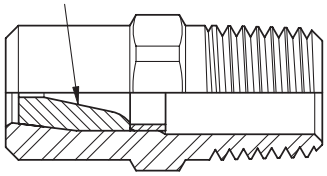

- Tungsten carbide orifice inserts significantly outlast conventional nozzle orifice material
- Tapered geometry provides highly cohesive, distortion-free waterjets for concentrated, work saving cleaning and cutting power
- Enables more work to be done in less time
- Straight (0°) and fan patterns available
- 1/4″ NPT Male connection*
- 22,000 psi (1516 bar) maximum working pressure

HHTC0 STRAIGHT JET		HHTC15 15° FAN JET	HHTC25 25° FAN JET	HHTC50 50° FAN JET
PART NO.**		**PART NO.****	**PART NO.****	**PART NO.****
HHTC0-018	HHTC0-073	HHTC15-029	HHTC25-047	HHTC50-057
HHTC0-020	HHTC0-075	HHTC15-038	HHTC25-057	HHTC50-063
HHTC0-022	HHTC0-078	HHTC15-042	HHTC25-063	HHTC50-067
HHTC0-024	HHTC0-082	HHTC15-047	HHTC25-067	HHTC50-069
HHTC0-026	HHTC0-090	HHTC15-057	HHTC25-069	HHTC50-073
HHTC0-029	HHTC0-093	HHTC15-063	HHTC25-073	HHTC50-078
HHTC0-032	HHTC0-098	HHTC15-067	HHTC25-078	
HHTC0-035	HHTC0-106	HHTC15-069	HHTC25-093	
HHTC0-038	HHTC0-110	HHTC15-073		
HHTC0-042	HHTC0-115	HHTC15-078		
HHTC0-047	HHTC0-125	HHTC15-082		
HHTC0-052	HHTC0-135	HHTC15-090		
HHTC0-057	HHTC0-145	HHTC15-093		
HHTC0-063	HHTC0-155			
HHTC0-067	HHTC0-165			
HHTC0-069				

*See details on all connection types in Section I.
**Orifice size (or equivalent for fan types) is denoted in the part number (-018, etc.)

For nozzle flow rates, see Carbide Orifices Group A chart page G-33.

REPLACEABLE NOZZLE TIPS

HHS0 NOZZLES FOR DURASAFE HAND GUNS

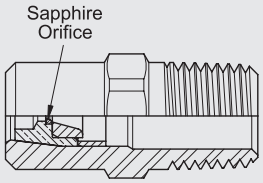

- Precision honed sapphire orifice inserts are twice as durable as tungsten carbide
- Tapered orifice retainer provides highly cohesive, distortion-free waterjets for concentrated, work saving cleaning and cutting power
- Straight (0°) patterns
- 1/4″ NPT Male connection*
- 22,000 psi (1516 bar) maximum working pressure

HHS0 STRAIGHT JET

*See details on all connection types in Section I.

PART NO.**
HHS0-025
HHS0-029
HHS0-033
HHS0-038
HHS0-042
HHS0-046
HHS0-055

**Orifice size (or equivalent for fan types) is denoted in the part number (-018, etc.)

For nozzle flow rates, see Sapphire Orifices chart page G-34.

P1 PIPE CLEANING NOZZLES

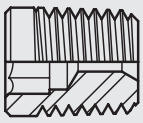

- Low profile design for unobstructed pipe cleaning
- Stainless steel
- Precision drilled orifice
- Tapered geometry provides highly cohesive, distortion-free waterjets for concentrated, work saving cleaning and cutting power
- Straight (0°) patterns
- 1/16″ NPT Male connection*
- 22,000 psi (1516 bar) maximum working pressure

P1 STRAIGHT JET

*See details on all connection types in Section I.

PART NO.**
P1-038
P1-042
P1-046
P1-055
P1-062
P1-067
P1-070
P1-073
P1-078

**Orifice size (or equivalent for fan types) is denoted in the part number (-018, etc.)

For nozzle flow rates, see Stainless Steel Orifices Group A chart page G-34.

LOW PROFILE NOZZLE TIPS

P4TC PIPE CLEANING NOZZLES

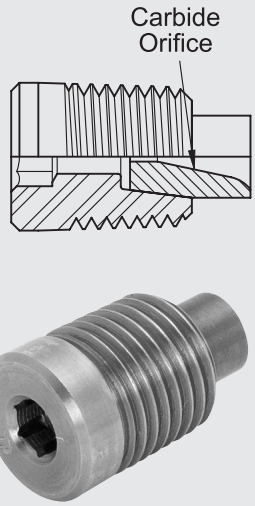

- Low profile design for unobstructed pipe cleaning
- Tungsten carbide orifice inserts significantly outlast conventional nozzle orifice material
- Tapered geometry provides highly cohesive, distortion-free waterjets for concentrated, work-saving cleaning and cutting power
- Straight (0°) patterns
- 1/4″ NPT Male connection*
- 22,000 psi (1516 bar) maximum working pressure

*See details on all connection types in Section I.

P4TC STRAIGHT JET	
PART NO.**	PART NO.**
P4TC-018	P4TC-067
P4TC-020	P4TC-069
P4TC-022	P4TC-073
P4TC-024	P4TC-075
P4TC-026	P4TC-078
P4TC-029	P4TC-082
P4TC-032	P4TC-090
P4TC-035	P4TC-093
P4TC-038	P4TC-098
P4TC-042	P4TC-106
P4TC-047	P4TC-110
P4TC-052	P4TC-115
P4TC-057	P4TC-125
P4TC-063	

**Orifice size (or equivalent for fan types) is denoted in the part number (-018, etc.)

For nozzle flow rates, see Carbide Orifices Group A chart page G-33.

P2TC PIPE CLEANING NOZZLES

- Low profile design for unobstructed pipe cleaning
- Tungsten carbide orifice inserts significantly outlast conventional nozzle orifice material
- Tapered geometry provides highly cohesive, distortion-free waterjets for concentrated, work saving cleaning and cutting power
- Straight (0°) patterns
- 1/8″ NPT Male connection*
- 22,000 psi (1516 bar) maximum working pressure

*See details on all connection types in Section I.

P2TC STRAIGHT JET	
PART NO.**	PART NO.**
P2TC-018	P2TC-067
P2TC-020	P2TC-069
P2TC-022	P2TC-073
P2TC-024	P2TC-075
P2TC-026	P2TC-078
P2TC-029	P2TC-082
P2TC-032	P2TC-090
P2TC-035	P2TC-093
P2TC-038	P2TC-098
P2TC-042	P2TC-106
P2TC-047	P2TC-110
P2TC-052	P2TC-115
P2TC-057	P2TC-125
P2TC-063	

**Orifice size (or equivalent for fan types) is denoted in the part number (-018, etc.)

For nozzle flow rates, see Carbide Orifices Group A chart page G-33.

LOW PROFILE NOZZLE TIPS

P2TCS PIPE CLEANING NOZZLES

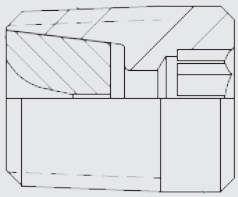

- Low profile design for unobstructed pipe cleaning with short inlet
- Tungsten carbide orifice inserts significantly outlast conventional nozzle orifice material
- Tapered geometry provides highly cohesive, distortion-free waterjets for concentrated, work saving cleaning and cutting power
- Straight (0°) patterns
- 1/8″ NPT Male connection*
- 22,000 psi (1516 bar) maximum working pressure

*See details on all connection types in Section I.

P2TCS STRAIGHT JET	
PART NO.**	PART NO.**
P2TCS-018	P2TCS-067
P2TCS-020	P2TCS-069
P2TCS-022	P2TCS-073
P2TCS-024	P2TCS-075
P2TCS-026	P2TCS-078
P2TCS-029	P2TCS-082
P2TCS-032	P2TCS-090
P2TCS-035	P2TCS-093
P2TCS-038	P2TCS-098
P2TCS-042	P2TCS-106
P2TCS-047	P2TCS-110
P2TCS-052	P2TCS-115
P2TCS-057	P2TCS-125
P2TCS-063	

**Orifice size (or equivalent for fan types) is denoted in the part number (-018, etc.)

For nozzle flow rates, see Carbide Orifices Group A chart page G-33.

JS2 PIPE CLEANING NOZZLES

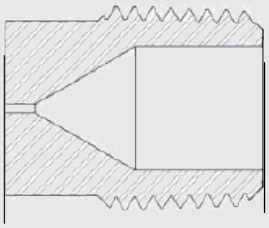

- Low profile design for unobstructed pipe cleaning with short inlet
- Stainless steel
- Precision drilled orfice
- Tapered geometry provides highly cohesive, distortion-free waterjets for concentrated, work saving cleaning and cutting power
- Straight (0°) patterns
- 1/8″ NPT Male connection*
- 22,000 psi (1516 bar) maximum working pressure

*See details on all connection types in Section I.

JS2 STRAIGHT JET	
PART NO.**	PART NO.**
JS2-018	JS2-063
JS2-020	JS2-069
JS2-022	JS2-075
JS2-024	JS2-082
JS2-026	JS2-090
JS2-029	JS2-098
JS2-032	JS2-106
JS2-035	JS2-115
JS2-038	JS2-125
JS2-042	JS2-135
JS2-047	JS2-145
JS2-052	JS2-PLUG
JS2-057	

**Orifice size (or equivalent for fan types) is denoted in the part number (-018, etc.)

For nozzle flow rates, see Stainless Steel Orifices Group B chart, page G-35.

LOW PROFILE NOZZLE TIPS

JS4 PIPE CLEANING NOZZLES

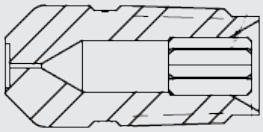

- Low profile design for unobstructed pipe cleaning with short inlet
- Stainless steel
- Precision drilled orfice
- Tapered geometry provides highly cohesive, distortion-free waterjets for concentrated, work saving cleaning and cutting power
- Straight (0°) patterns
- 1/4″ NPT Male connection*
- 22,000 psi (1516 bar) maximum working pressure

JS4 STRAIGHT JET	
PART NO.**	PART NO.**
JS4-018	JS4-063
JS4-020	JS4-069
JS4-022	JS4-075
JS4-024	JS4-082
JS4-026	JS4-090
JS4-029	JS4-098
JS4-032	JS4-106
JS4-035	JS4-115
JS4-038	JS4-125
JS4-042	JS4-135
JS4-047	JS4-145
JS4-052	JS4-155
JS4-057	JS4-165

*See details on all connection types in Section I.

**Orifice size (or equivalent for fan types) is denoted in the part number (-018, etc.)

For nozzle flow rates, see Stainless Steel Orifices Group B chart, page G-35.

JS4F PIPE CLEANING NOZZLES

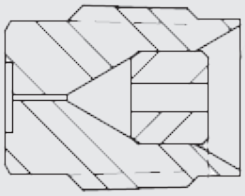

- Flush mount design
- Stainless steel
- Precision drilled orfice
- Tapered geometry provides highly cohesive, distortion-free waterjets for concentrated, work saving cleaning and cutting power
- Straight (0°) patterns
- 1/4″ NPT Male connection*
- 22,000 psi (1516 bar) maximum working pressure

JS4 STRAIGHT JET	
PART NO.**	PART NO.**
JS4F-018	JS4F-063
JS4F-020	JS4F-069
JS4F-022	JS4F-075
JS4F-024	JS4F-082
JS4F-026	JS4F-090
JS4F-029	JS4F-098
JS4F-032	JS4F-106
JS4F-035	JS4F-115
JS4F-038	JS4F-135
JS4F-042	JS4F-145
JS4F-047	JS4F-155
JS4F-052	JS4F-165
JS4F-057	JS4F-PLUG

*See details on all connection types in Section I.

**Orifice size (or equivalent for fan types) is denoted in the part number (-018, etc.)

For nozzle flow rates, see Stainless Steel Orifices Group B chart, page G-35.

FLUSH MOUNT NOZZLE TIPS

P1S0 PIPE CLEANING NOZZLES

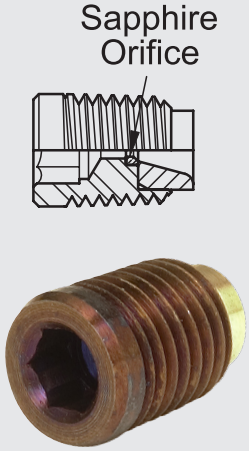

- Low profile design for unobstructed pipe cleaning
- Precision honed sapphire orifice inserts are twice as durable as tungsten carbide
- Tapered geometry provides highly cohesive, distortion-free waterjets for concentrated, work saving cleaning and cutting power
- Enables more work to be done in less time
- Straight (0°) patterns
- 1/16″ NPT Male connection*
- 22,000 psi (1516 bar) maximum working pressure

**See details on all connection types in Section I.

P1S0 STRAIGHT JET
PART NO.**
P1S0-018
P1S0-025
P1S0-029
P1S0-033
P1S0-038
P1S0-042
P1S0-046
P1S0-052

**Orifice size (or equivalent for fan types) is denoted in the part number (-018, etc.)
For nozzle flow rates, see Stainless Steel Orifices Group A chart page G-34..

RM NOZZLES FOR ROTOMAG X22

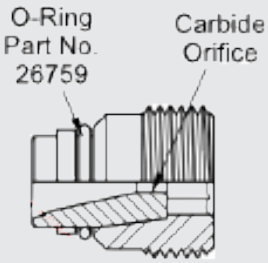

- Flush mount design
- Tapered geometry provides highly cohesive, distortion-free waterjets for concentrated, work saving cleaning and cutting power
- Enables more work to be done in less time
- Straight (0°) patterns
- 1/2″-28UNEF male connection
- 22,000 psi (1516 bar) maximum working pressure

*See details on all connection types in Section I.

RM STRAIGHT JET
PART NO.**
RM-018
RM-024
RM-029
RM-032
RM-038
RM-042
RM-047
RM-057
RM-063
RM-067
RM-069
RM-073
RM-078
RM-082
RM-090
RM-093
RM-110

**Orifice size (or equivalent for fan types) is denoted in the part number (-018, etc.)
For nozzle flow rates, see Carbide Orifices Group A chart page G-33.

FLUSH MOUNT NOZZLE TIPS

RMS NOZZLES FOR ROTOMAG X22

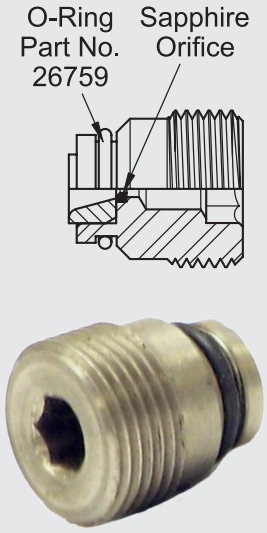

- Flush mount design
- Precision-honed sapphire orifice inserts are twice as durable as tungsten carbide
- Tapered orifice retainer provides highly cohesive, distortion-free waterjets for concentrated, work-saving cleaning and cutting power
- Straight (0°) patterns
- 1/2″-28UNEF male connection*
- 22,000 psi (1516 bar) maximum working pressure

*See details on all connection types in Section I.

RMS STRAIGHT JET
PART NO.**
RMS-018
RMS-025
RMS-029
RMS-033
RMS-038
RMS-042
RMS-046
RMS-052

**Orifice size (or equivalent for fan types) is denoted in the part number (-018, etc.)

For nozzle flow rates, see Sapphire Orifices chart page G-34.

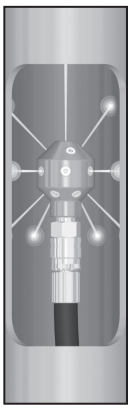

PIPE CLEANING NOZZLES

Commonly called “pineapples,” pipe cleaning nozzles are used for cleaning large diameter pipes (generally 4″ or larger).

- Available in a variety of sizes and patterns
- Nozzle ports can be plugged to create several unique patterns to perform specific tasks (unplugging, flushing, etc.)
- Heat-treated stainless steel

NOZZLE	NUMBER OF JETS	DIMENSIONS	USE WITH	NOZZLE PORT PLUG
	1 FRONT JET 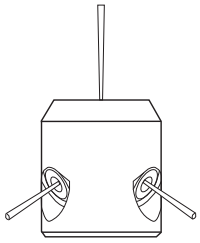 3 BACK JETS (30°)	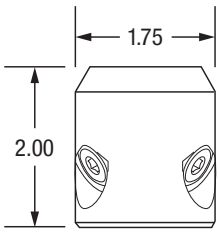 Dimensions shown in inches	P4TC Nozzles Page G-38	Plug unused nozzle ports **Part No. 25392**

PART NO.	CONNECTIONS*		MAX OPERATING PRESSURE	
	INLET	NOZZLE	psi	bar
50512	1/2″ NPT Female	1/4″ NPT Female	10,000	689

*See details on all connection types in Section I.

NOZZLE	NUMBER OF JETS	DIMENSIONS	USE WITH	NOZZLE PORT PLUG
	1 FRONT JET 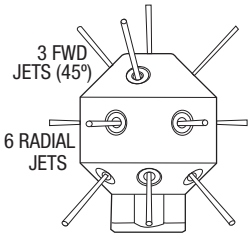 6 BACK JETS (45º)	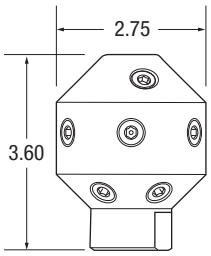 Dimensions shown in inches	P2TC/JS4 Nozzles Pages G-38, G-40	Plug unused nozzle ports **Part No. 26170**

PART NO.	CONNECTIONS*		MAX OPERATING PRESSURE	
	INLET	NOZZLE	psi	bar
54184	3/4″ NPT Female	1/8″ NPT Female	15,000	1034

*See details on all connection types in Section I.

PIPE CLEANING NOZZLES

NOZZLE	NUMBER OF JETS	DIMENSIONS	USE WITH	NOZZLE PORT PLUG
	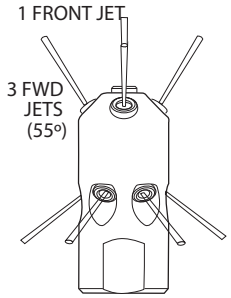	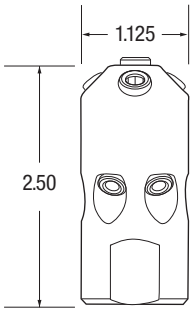 Dimensions shown in inches	P1S0 NOZZLES Page G-41 	Plug unused nozzle ports **Part No. 25395**

PART NO.	CONNECTIONS*		MAX OPERATING PRESSURE	
	INLET	NOZZLE	psi	bar
54165	3/4″ NPT Female	1 1/16″ NPT Female	15,000	1034

*See details on all connection types in Section I.

NOZZLE	NUMBER OF JETS	DIMENSIONS	USE WITH	NOZZLE PORT PLUG
	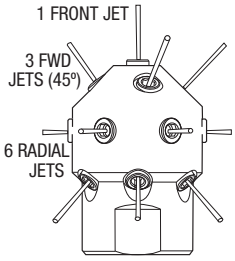	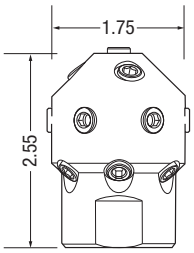 Dimensions shown in inches	P1S0 NOZZLES Page G-41 	Plug unused nozzle ports **Part No. 25395**

PART NO.	CONNECTIONS*		MAX OPERATING PRESSURE	
	INLET	NOZZLE	psi	bar
54166	3/4″ NPT Female	1/16″ NPT Female	15,000	1034

*See details on all connection types in Section I.

PIPE CLEANING NOZZLES

NOZZLE	NUMBER OF JETS	DIMENSIONS	USE WITH	NOZZLE PORT PLUG
	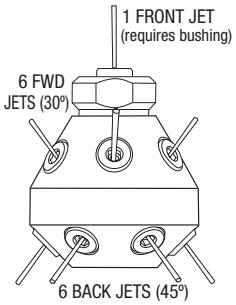	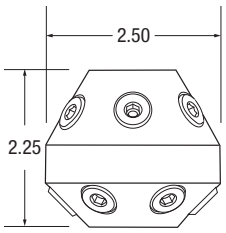 Dimensions shown in inches	P4TC NOZZLES Page G-38	Plug unused nozzle ports **Part No. 25392**

PART NO.	CONNECTIONS*		MAX OPERATING PRESSURE	
	INLET	NOZZLE	psi	bar
51094	3/4″ NPT Female	1/4″ NPT Female	15,000	1034

*See details on all connection types in Section I.

CONFIGURATIONS & ACCESSORIES

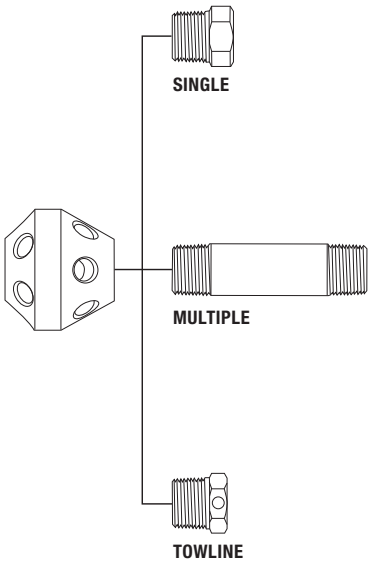

Reducing Bushing
Allows the connection of a nozzle to the front port
Part No. 26069

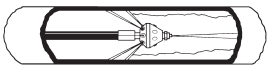

Nipple
Connect multiple pipe cleaning nozzles
Part No. 28875-04

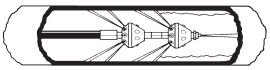

Towing Eye Plug
Use to pull nozzle through pipe
Part No. 51156

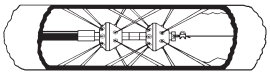

PIPE CLEANING NOZZLES

NOZZLE	NUMBER OF JETS	DIMENSIONS	USE WITH	NOZZLE PORT PLUG
	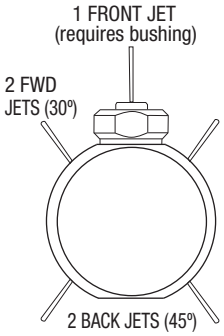	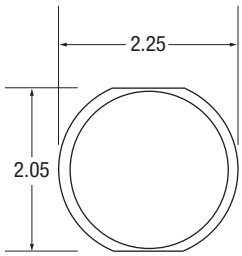	P4TC NOZZLES Page G-38	Plug unused nozzle ports Part No. 25392

PART NO.	CONNECTIONS*			MAX OPERATING PRESSURE	
	INLET	FRONT	NOZZLE PORT	psi	bar
51096	1/2″ NPT Female	1/4″ NPT Female	1/4″ NPT Female	10,000	689

*See details on all connection types in Section I.

CONFIGURATIONS & ACCESSORIES

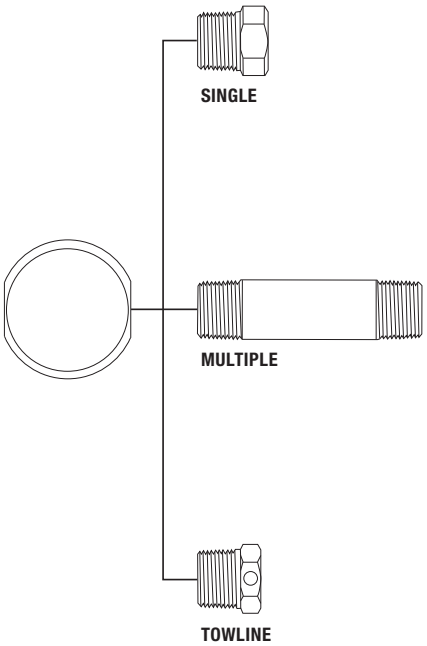

Reducing Bushing
Allows the connection of a nozzle to the front port
Part No. 25904

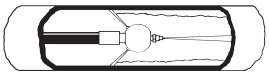

Nipple
Connect multiple pipe cleaning nozzles
Part No. 55450-04

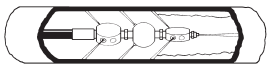

Towing Eye Plug
Use to pull nozzle through pipe
Part No. 51169

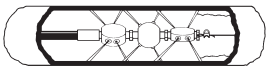

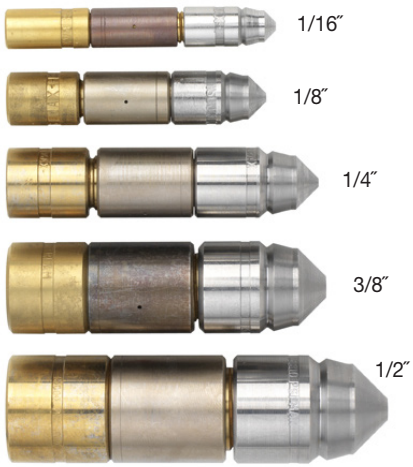

NOTE: Shown with FP series cap nozzles, SOLD SEPARATELY.

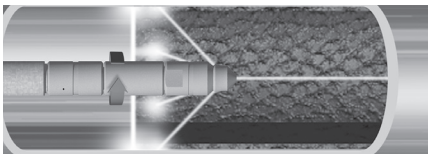

TUBE SPINNER™
TUBE CLEANING NOZZLES

- Innovative, debris exclusion* sleeve design for maximum reliability and reduced maintenance
- Provide the most thorough cleaning of tube walls
- Maximum impact without streaking
- Self-rotating, heat-treated stainless steel sleeve spins on a bearing of water and features two radial jets that spin at high speed for complete coverage
- Specially coated nozzle body for maximum lubricity
- Custom flow rates available for special applications
- Tube nozzles or blanks are used to cap the end of the nozzle **(sold separately)**
- Thruster nozzles can be used in conjunction for greater inertia forward **(sold separately)**
- Female pipe thread (NPT Female) inlet, male pipe thread outlet (NPT Male)
- 15,000 psi (1034 bar) maximum working pressure

*Patent Pending

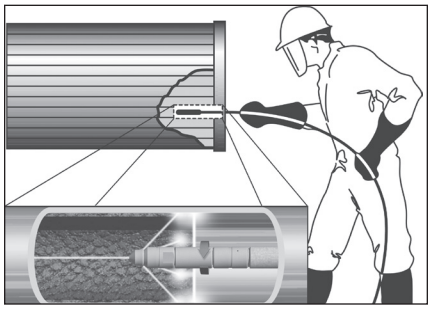

DEBRIS EXCLUSION							
ASSEMBLY PART NO.	CONNECTIONS* FEMALE INLET X MALE OUTLET*	FLOW RATE	OUTSIDE DIAMETER		LENGTH W/ NOZZLE		SLEEVE PART NO.
			in	mm	in	mm	
63358	1/16″ NPT	1	.375	9.5	2.72	69	63333
63359		2	.375	9.5	2.72	69	63334
63348	1/8″ NPT	1	.500	12.7	2.66	68	63331
63349		2	.500	12.7	2.66	68	63332
63350	1/4″ NPT	1	.665	16.8	3.14	80	63323
63351		2	.665	16.8	3.14	80	63324
63352	3/8″ NPT	1	.875	22.2	3.30	84	63325
63353		2	.875	22.2	3.30	84	63326
64189		3	.875	22.2	3.30	84	64185
64190		4	.875	22.2	3.30	84	64186
63354	1/2″ NPT	1	1.040	26.4	3.92	100	63327
63355		2	1.040	26.4	3.92	100	63328
64191		3	1.040	26.4	3.92	100	64187
64192		4	1.040	26.4	3.92	100	64188
63362	M7 Flat Seal	1	.375	9.5	2.28	58	63333
63363		2	.375	9.5	2.28	58	63334
63364	1/8" BSPP Flat Seal	1	.500	12.7	2.38	61	63331
63365		2	.500	12.7	2.38	61	63332
63323	1/4" BSPP Flat Seal	1	.665	16.9	2.68	68	63323
63324		2	.665	16.9	2.68	68	63324

*See details on all connection types in Section I.

REPLACEMENT PART FOR FLAT SEAL CONNECTIONS

Copper Crush Washer For flat seal connections between the tube spinner and the lance.

SIZE	PART NO.
M7	59932
1/8" BSPP	59933
1/4" BSPP	59934

15,000 PSI (1,034 BAR)

TUBE SPINNER™ NOZZLE FLOW RATINGS

SIZE*	FLOW RATE	FLOW AT SPECIFIED PRESSURES (PSI / BAR)**																			
		3,000	206	4,000	275	5,000	344	6,000	413	7,000	482	8,000	551	9,000	620	10,000	689	12,500	861	15,000	1034
		gpm	lpm	gpm	lpm	gpm	lpm	gpm	lpm	gpm	lpm	gpm	lpm	gpm	lpm	gpm	lpm	gpm	lpm	gpm	lpm
NPT INLET																					
1/16"	1	1.9	7.1	2.3	8.7	2.6	9.8	2.9	10.9	3.2	12.1	3.5	13.2	3.7	14.0	4.0	15.1	4.6	17.4	5.1	19.3
	2	3.0	11.3	3.5	13.2	4.0	15.1	4.4	16.6	4.8	18.1	5.2	19.6	5.6	21.2	5.9	22.3	6.8	25.7	7.5	28.3
1/18"	1	2.6	9.8	3.1	11.7	3.5	13.2	3.9	14.7	4.3	16.6	4.7	17.7	5.0	18.9	5.4	20.4	6.2	23.4	7.0	26.5
	2	5.0	18.9	5.9	22.3	6.7	25.3	7.4	28.0	8.0	30.2	8.7	32.9	9.3	35.2	9.9	37.4	11.3	42.7	12.5	47.3
1/4"	1	2.4	9.0	2.9	10.9	3.4	12.8	3.8	14.3	4.2	15.9	4.6	17.4	5.0	18.9	5.4	20.4	6.3	23.8	7.2	27.2
	2	5.2	19.6	6.2	23.4	7.0	26.5	7.8	29.5	8.5	32.1	9.2	34.8	9.9	37.4	10.6	40.1	12.1	45.8	13.5	51.1
3/8"	1	3.6	13.6	4.3	16.6	4.9	18.5	5.5	20.8	6.1	23.0	6.6	24.9	7.2	27.2	7.7	29.1	9.0	34.0	10.1	38.2
	2	7.0	26.5	8.2	31.0	9.3	35.2	10.4	39.3	11.3	42.7	12.2	46.1	13.1	49.5	14.0	53.0	15.9	60.1	17.8	67.3
	3	10.0	37.8	11.7	44.2	13.3	50.3	14.7	55.6	16.0	60.5	17.2	65.1	18.4	69.6	19.6	74.1	22.1	83.6	24.6	93.1
	4	13.7	51.8	15.9	60.1	18.0	68.1	19.9	75.3	21.5	81.3	23.1	87.4	24.7	93.5	26.2	99.1	29.5	111.7	32.7	123.8
1/2"	1	3.0	11.3	3.7	14.0	4.3	16.2	4.9	18.5	5.5	20.8	6.1	23.0	6.6	24.9	7.1	26.8	8.5	32.1	9.7	36.7
	2	6.7	25.3	7.9	29.9	9.0	34.0	10.0	37.8	11.0	41.6	12.0	45.4	12.9	48.8	13.7	51.8	15.8	59.8	17.8	67.3
	3	10.3	38.9	12.2	46.1	13.8	52.2	15.2	57.5	16.7	63.2	18.1	68.5	19.3	73.0	20.5	77.6	23.4	88.5	26.1	98.9
	4	14.0	53.0	16.4	62.0	18.5	70.0	20.4	77.2	22.2	84.0	24.0	90.8	25.6	96.9	27.1	102.6	30.8	116.6	34.2	129.5
M7 FLAT SEAL INLET																					
M7	1	1.9	7.1	2.3	8.7	2.6	9.8	2.9	10.9	3.2	12.1	3.5	13.2	3.7	14.0	4.0	15.1	4.6	17.4	5.1	19.3
	2	3.0	11.3	3.5	13.2	4.0	15.1	4.4	16.6	4.8	18.1	5.2	19.6	5.6	21.2	5.9	22.3	6.8	25.7	7.5	28.3
BSPP FLAT SEAL INLET																					
1/8"	1	2.6	9.8	3.1	11.7	3.5	13.2	3.9	14.7	4.3	16.6	4.7	17.7	5.0	18.9	5.4	20.4	6.2	23.4	7.0	26.5
	2	5.0	18.9	5.9	22.3	6.7	25.3	7.4	28.0	8.0	30.2	8.7	32.9	9.3	35.2	9.9	37.4	11.3	42.7	12.5	47.3
1/4"	1	2.4	9.0	2.9	10.9	3.4	12.8	3.8	14.3	4.2	15.9	4.6	17.4	5.0	18.9	5.4	20.4	6.3	23.8	7.2	27.2
	2	5.2	19.6	6.2	23.4	7.0	26.5	7.8	29.5	8.5	32.1	9.2	34.8	9.9	37.4	10.6	40.1	12.1	45.8	13.5	51.1

*See details on all connection types in Section I.
**Flow rates do not include the additional flow of the tube nozzle used as a cap.

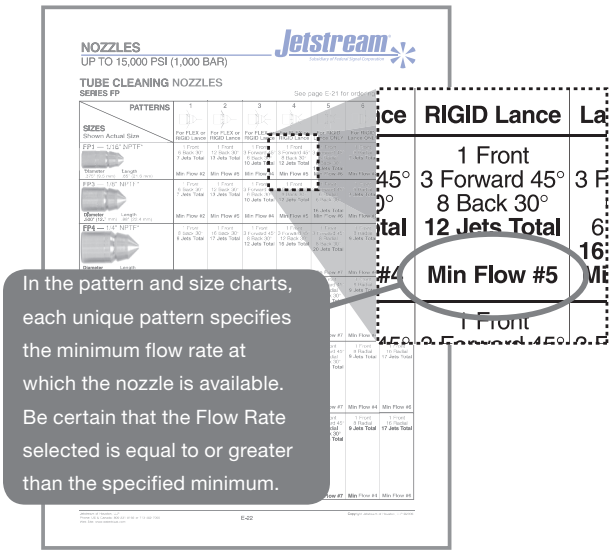

TUBE CLEANING NOZZLES
SELECTION & PART NUMBERING

Use the part numbering instructions and flow chart on this page for ordering tube nozzles pages G-50 to G-70.

NOZZLE PART NUMBERING

Example Part Number: FP 3 4 - 7

NOZZLE SERIES

FP FPC FPT E EX
C MP MS TP
FM FB2

SIZE
From left column of nozzle size and pattern charts (Pages G-57 - G-70)

PATTERN
Specify number corresponding to desired pattern nozzle size and pattern charts. (Pages G-57 - G-70)

HYPHEN

FLOW RATING
Find the flow rate number that most closely matches the desired flow and pressure chart below.
Example:
a flow rate number of 7 will flow 6.6 gpm at 6,000 psi.

NOZZLE FLOW RATES

FLOW RATE	FLOW AT SPECIFIED PRESSURES (PSI / BAR)																	
	3,000	206	5,000	344	6,000	413	8,000	551	10,000	689	11,000	758	12,000	827	14,000	965	15,000	1034
	gpm	lpm	gpm	lpm	gpm	lpm	gpm	lpm	gpm	lpm	gpm	lpm	gpm	lpm	gpm	lpm	gpm	lpm
2	1.5	5.6	1.9	7.1	2.1	7.9	2.4	9.1	2.7	10.2	2.9	10.9	3.0	11.3	3.2	12.3	3.3	12.4
3	1.8	7.1	2.4	9.1	2.6	9.8	3.0	11.3	3.3	12.4	3.5	13.2	3.7	14.0	4.0	15.2	4.1	15.5
4	2.2	8.3	2.9	10.9	3.2	12.3	3.7	14.0	4.1	15.5	4.3	16.3	4.5	17.0	4.8	18.1	5.0	18.9
5	3.1	12.1	4.0	15.2	4.4	16.6	5.1	19.3	5.7	21.5	6.0	22.7	6.3	23.8	6.8	25.7	7.0	26.5
6	4.1	15.5	5.2	19.6	5.7	21.5	6.6	24.9	7.4	28.0	7.8	29.5	8.1	30.6	8.7	32.9	9.1	34.5
7	4.7	17.7	6.0	22.7	6.6	24.9	7.6	28.9	8.5	32.1	8.9	33.6	9.3	35.2	10.1	38.2	10.4	39.3
8	5.1	19.3	6.6	24.9	7.2	27.4	8.3	31.4	9.3	35.2	9.7	36.8	10.2	38.6	11.0	41.6	11.4	43.1
9	5.5	208	7.1	26.8	7.8	29.5	9.0	34.0	10.1	38.2	10.6	40.3	11.1	42.0	11.9	45.0	12.4	47.0
10	6.3	23.8	8.1	30.6	8.9	33.6	10.3	38.9	11.5	43.6	12.1	45.8	12.6	47.7	13.6	51.4	14.1	53.3
12	6.8	25.7	8.8	33.3	9.6	36.3	11.1	42.0	12.4	47.0	13.0	49.2	13.6	51.4	14.7	55.6	15.2	57.5
14	8.2	31.0	10.6	40.3	11.6	43.9	13.4	50.7	15.0	56.7	15.7	59.4	16.4	62.0	17.7	67.0	18.4	69.6
15	9.0	34.0	11.6	43.9	12.7	48.0	14.6	55.2	16.4	62.0	17.2	65.1	17.9	67.7	19.4	73.4	20.1	76.0
20	12.5	47.3	16.2	61.3	17.7	67.0	20.5	77.6	22.9	86.6	24.0	90.8	25.1	95.0	27.1	102.6	28.1	106.4
40	16.2	61.3	20.9	79.1	22.9	86.6	26.5	100.3	29.8	112.8	31.0	117.3	32.4	122.6	35.0	132.5	36.2	137.0

FP SERIES
TUBE CLEANING NOZZLES

- For use with flex or rigid lances that have male pipe threads (NPT Male)
- Recessed orifices for protection surface abrasion or damage by wrenches
- Double-tapered nose for fast, unrestricted travel through plugged tubes
- Machined heat-treated stainless steel
- Maximum working pressure: 15,000 psi (1034 bar)
- Six sizes, seven standard patterns, and fourteen flow ratings (see page G-59)
- Custom patterns available
- Standard patterns with minimum flows

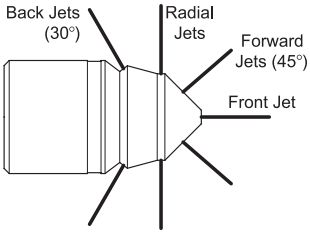

FPC SERIES
TUBE CLEANING NOZZLES

- For use with flex or rigid lances that have male pipe threads (NPT Male)
- Ultra-compact design ideal for getting around sharp bends in tube
- Orifices recessed for protection surface abrasion or damage by wrenches
- Machined heat-treated stainless steel
- Maximum working pressure: 15,000 psi (1034 bar)
- Five sizes, seven standard patterns and fourteen flow ratings
- Custom patterns available
- See page G-49 for flow ratings and ordering instructions

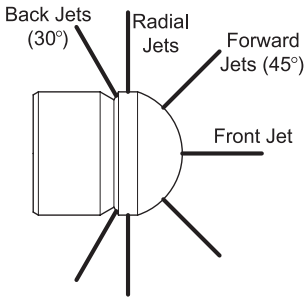

C SERIES
TUBE CLEANING NOZZLES

- For use with specially designed Jetstream flex lances that have male machine screw threads (UNEF)
- Ultra-compact design for cleaning U-tubes and other small diameter tubes
- Wrench flats for easy installation and removal
- Machined heat-treated stainless steel
- Locking pin (see page G-61) must be installed to prevent nozzle unscrewing lance
- Maximum working pressure: C1: 8,000 psi (551 bar) C2: 10,000 psi (689 bar)
- Two sizes, four standard patterns and fourteen flow ratings
- See page G-49 for flow ratings and ordering instructions
- Custom patterns available

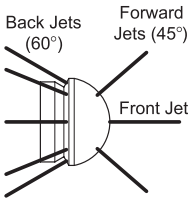

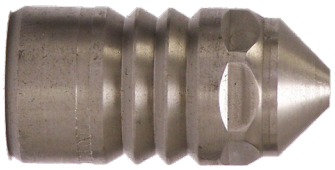

FPT SERIES
TUBE CLEANING NOZZLES

- For use with flex or rigid lances that have male pipe threads (NPT Male)
- Features three rows of rearward facing jets for powerful polishing and flushing
- Wrench flats for easy installation and removal
- Machined heat-treated stainless steel
- Maximum working pressure: 15,000 psi (1034 bar)
- Five sizes, four standard patterns and fourteen flow ratings (ten for standard patterns)
- See page G-49 for flow ratings and ordering instructions
- Custom patterns available

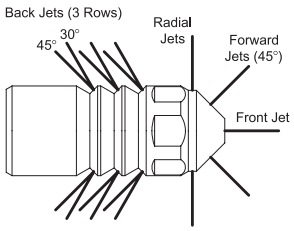

E SERIES
TUBE CLEANING NOZZLES

- For use with flex or rigid lances that have male pipe threads (NPT Male)
- Features long, tapered nose for penetrating fouled tubes
- Machined heat-treated stainless steel
- Maximum working pressure: 15,000 psi (1034 bar)
- Five sizes, two standard patterns and fourteen flow ratings (eleven for standard patterns)
- See page G-49 for flow ratings and ordering instructions
- Custom patterns available

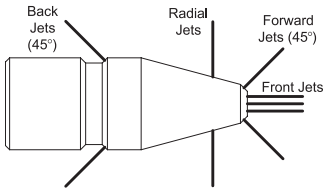

EX SERIES
TUBE CLEANING NOZZLES

- For use with flex or rigid lances that have male pipe threads (NPT Male)
- Features long, tapered nose for penetrating front jets and two rows of recessed rear jets for flushing, polishing and pulling
- Wrench flats for easy installation and removal
- Machined heat-treated stainless steel
- Maximum working pressure: 15,000 psi (1034 bar)
- Five sizes, five standard patterns and fourteen flow ratings (11 for standard patterns)
- See page G-49 for flow ratings and ordering instructions
- Custom patterns available

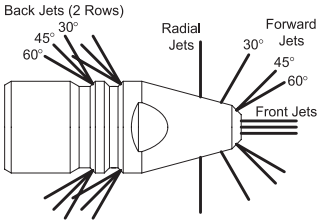

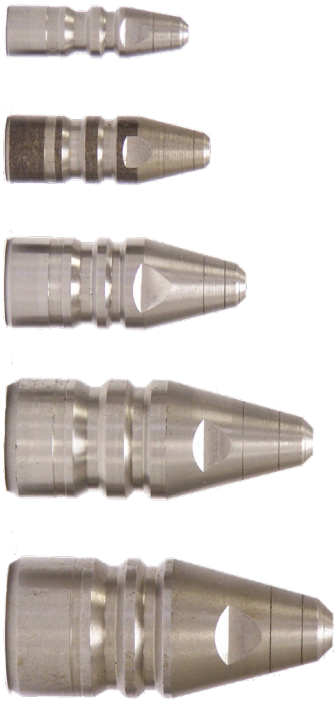

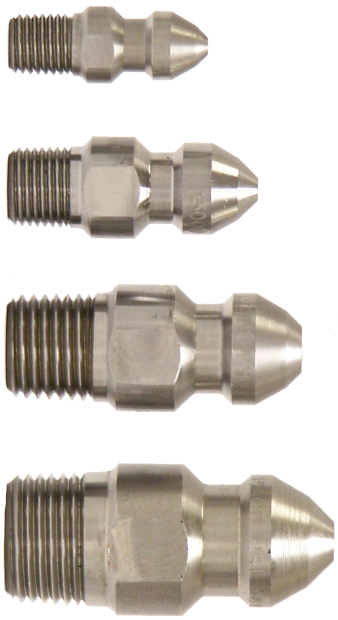

MP SERIES
TUBE CLEANING NOZZLES

- Specifically for use with rigid lances that have female pipe threads (NPT Female)
- Recessed orifices for protection from surface abrasion or damage by wrenches
- Double-tapered nose for fast, unrestricted travel through plugged tubes
- Machined heat-treated stainless steel
- Maximum working pressure: 15,000 psi (1034 bar)
- Four sizes, seven standard patterns and fourteen flow ratings
- Custom patterns available
- See page G-49 for flow ratings and ordering instructions

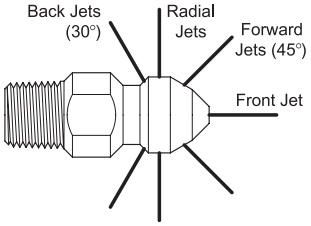

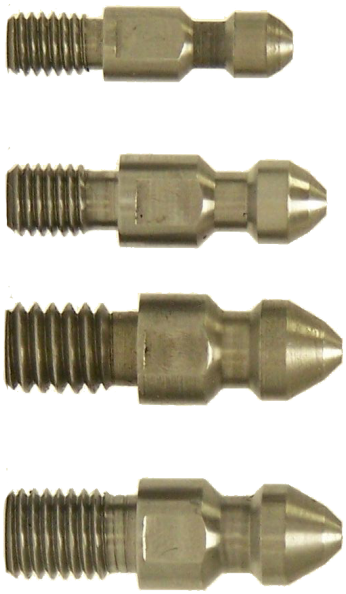

MS SERIES
TUBE CLEANING NOZZLES

- For use with Jetstream flex or rigid lances that have female machine screw threads (UNF, UNC)
- Designed with the smallest possible outside diameter for cleaning small tubes
- Wrench flats for easy installation and removal
- Machined heat-treated stainless steel
- Maximum working pressure: 10,000 psi (689 bar)
- Four sizes, seven standard patterns and fourteen flow ratings
- See page G-49 for flow ratings and ordering instructions
- Custom patterns available

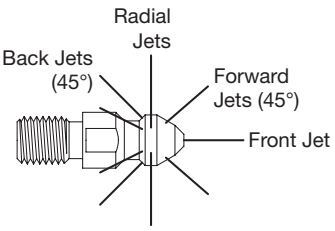

TP SERIES THRUSTERS
TUBE CLEANING NOZZLES

- Used in combination with Tube Spinners or other nozzles that do not have rear jets to provide thrust for pulling through tubes
- Rear orifices recessed for protection surface abrasion or damage by wrenches
- Female pipe threads at inlet (NPT Female) and male pipe threads at outlet (NPT Male)
- Machined heat-treated stainless steel
- Maximum working pressure: 15,000 psi (1034 bar)
- Three sizes, two standard patterns and thirteen flow ratings
- See page G-49 for flow ratings and ordering instructions
- Custom patterns available

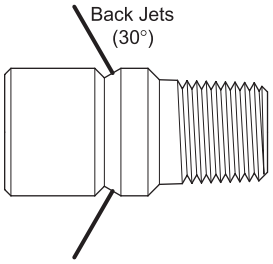

FM7 SERIES
TUBE CLEANING NOZZLES

- For use with Jetstream flex lances that have male M7 Flat Seal end fittings
- Heat-treated stainless steel
- Copper Crush Washer (shown on page G-47) must be installed for seal connection between the nozzle and lance
- Maximum working pressure: 15,000 psi (1034 bar)
- Seven standard patterns and fourteen flow ratings
- See page G-49 for flow ratings and ordering instructions
- Custom patterns available

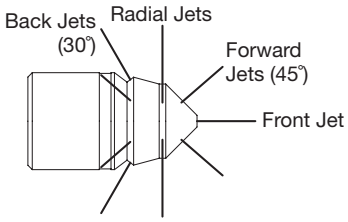

FB SERIES
TUBE CLEANING NOZZLES

- For use with Jetstream flex lances that have male BSPP Flat Seal end fittings
- Heat-treated stainless steel
- Copper Crush Washer (shown on page G-47) must be installed for seal connection between the nozzle and lance
- Maximum working pressure: 15,000 psi (1034 bar)
- Seven standard patterns and 14 flow ratings
- See page G-49 for flow ratings and ordering instructions
- Custom patterns available

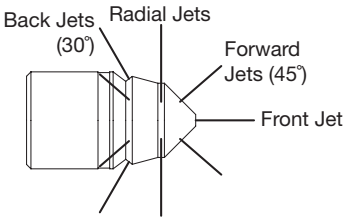

15,000 PSI (1,034 BAR)

FM / FB SERIES TUBE CLEANING NOZZLES			
PART NO.	FM7	FB2	FB4
NOZZLES SHOWN AS ACTUAL SIZE	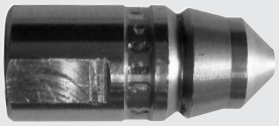		
INLET CONNECTION*	M7 FLAT SEAL	1/8″ BSPP FLAT SEAL	1/4″ BSPP FLAT SEAL
OUTSIDE DIAMETER	.375 | 9.5 mm	.500 | 12.7 mm	.665 | 16.9 mm
OVERALL LENGTH	.85″ | 21.6 mm	.88″ | 22.4 mm	1.16″ | 29.5 mm
PATTERNS - NUMBER OF JETS BY LOCATION			
PATTERN 1 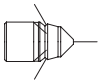 FLEX OR RIGID LANCES	1 Front 6 Back 30° 7 Jets Total **Min Flow #2**	1 Front 6 Back 30° 7 Jets Total **Min Flow #2**	1 Front 8 Back 30° 9 Jets Total **Min Flow #4**
PATTERN 2 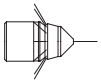 FLEX OR RIGID LANCES	1 Front 12 Back 30° 13 Jets Total **Min Flow #5**	1 Front 12 Back 30° 13 Jets Total **Min Flow #5**	1 Front 16 Back 30° 17 Jets Total **Min Flow #6**
PATTERN 3 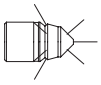 FLEX OR RIGID LANCES	1 Front 3 Forward 45° 6 Back 30° 10 Jets Total **Min Flow #4**	1 Front 3 Forward 45° 6 Back 30° 10 Jets Total **Min Flow #4**	1 Front 3 Forward 45° 8 Back 30° 12 Jets Total **Min Flow #5**
PATTERN 4 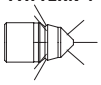 FLEX OR RIGID LANCES	1 Front 3 Forward 45° 8 Back 30° 12 Jets Total **Min Flow #5**	1 Front 3 Forward 45° 8 Back 30° 12 Jets Total **Min Flow #5**	1 Front 3 Forward 45° 12 Back 30° 16 Jets Total **Min Flow #6**
PATTERN 5 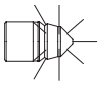 FLEX OR RIGID LANCES	1 Front 3 Forward 45° 6 Radial 6 Back 30° 16 Jets Total **Min Flow #6**	1 Front 3 Forward 45° 6 Radial 6 Back 30° 16 Jets Total **Min Flow #6**	1 Front 3 Forward 45° 8 Radial 8 Back 30° 20 Jets Total **Min Flow #7**
PATTERN 6 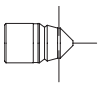 RIGID LANCE ONLY	1 Front 6 Radial 7 Jets Total **Min Flow #2**	1 Front 6 Radial 7 Jets Total **Min Flow #2**	1 Front 8 Radial 9 Jets Total **Min Flow #4**
PATTERN 7 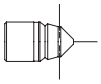 RIGID LANCE ONLY	1 Front 12 Radial 13 Jets Total **Min Flow #5**	1 Front 12 Radial 13 Jets Total **Min Flow #5**	1 Front 16 Radial 17 Jets Total **Min Flow #6**

*See details on all connection types in Section I.

15,000 PSI (1,034 BAR)

FP SERIES TUBE CLEANING NOZZLES			
PART NO.	FP1	FP3	FP4
NOZZLES SHOWN AS ACTUAL SIZE			
BLANK PART NO.	50624	50554	50639
INLET CONNECTION*	1/16″ NPT FEMALE*	1/8″ NPT FEMALE*	1/4″ NPT FEMALE*
OUTSIDE DIAMETER	.375 | 9.5 mm	.500 | 12.7 mm	.665 | 16.9 mm
OVERALL LENGTH	.85″ | 21.6 mm	.88″ | 22.4 mm	1.16″ | 29.5 mm
PATTERNS - NUMBER OF JETS BY LOCATION			
PATTERN 1 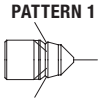 FLEX OR RIGID LANCES	1 Front 6 Back 30° 7 Jets Total **Min Flow #2**	1 Front 6 Back 30° 7 Jets Total **Min Flow #2**	1 Front 8 Back 30° 9 Jets Total **Min Flow #4**
PATTERN 2 FLEX OR RIGID LANCES	1 Front 12 Back 30° 13 Jets Total **Min Flow #5**	1 Front 12 Back 30° 13 Jets Total **Min Flow #5**	1 Front 16 Back 30° 17 Jets Total **Min Flow #6**
PATTERN 3 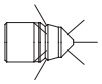 FLEX OR RIGID LANCES	1 Front 3 Forward 45° 6 Back 30° 10 Jets Total **Min Flow #4**	1 Front 3 Forward 45° 6 Back 30° 10 Jets Total **Min Flow #4**	1 Front 3 Forward 45° 8 Back 30° 12 Jets Total **Min Flow #5**
PATTERN 4 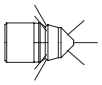 FLEX OR RIGID LANCES	1 Front 3 Forward 45° 8 Back 30° 12 Jets Total **Min Flow #5**	1 Front 3 Forward 45° 8 Back 30° 12 Jets Total **Min Flow #5**	1 Front 3 Forward 45° 12 Back 30° 16 Jets Total **Min Flow #6**
PATTERN 5 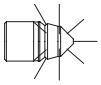 FLEX OR RIGID LANCES	1 Front 3 Forward 45° 6 Radial 6 Back 30° 16 Jets Total **Min Flow #6**	1 Front 3 Forward 45° 6 Radial 6 Back 30° 16 Jets Total **Min Flow #6**	1 Front 3 Forward 45° 8 Radial 8 Back 30° 20 Jets Total **Min Flow #7**
PATTERN 6 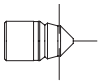 RIGID LANCE ONLY	1 Front 6 Radial 7 Jets Total **Min Flow #2**	1 Front 6 Radial 7 Jets Total **Min Flow #2**	1 Front 8 Radial 9 Jets Total **Min Flow #4**
PATTERN 7 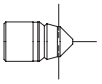 RIGID LANCE ONLY	1 Front 12 Radial 13 Jets Total **Min Flow #5**	1 Front 12 Radial 13 Jets Total **Min Flow #5**	1 Front 16 Radial 17 Jets Total **Min Flow #6**

*See details on all connection types in Section I.

FP SERIES TUBE CLEANING NOZZLES		
FP5	FP6	FP7
50640	50620	50851
3/8″ NPT FEMALE*	1/2″ NPT FEMALE*	3/4″ NPT FEMALE*
.875″ | 22.2 mm	1.040 | 26.4 mm	1.375 | 34.9 mm
1.20″ | 30.5 mm	1.47″ | 37.3 mm	1.87″ | 47.5 mm
PATTERNS - NUMBER OF JETS BY LOCATION		
1 Front 8 Back 30° 9 Jets Total **Min Flow #4**	1 Front 8 Back 30° 9 Jets Total **Min Flow #4**	1 Front 8 Back 30° 9 Jets Total **Min Flow #4**
1 Front 16 Back 30° 17 Jets Total **Min Flow #6**	1 Front 16 Back 30° 17 Jets Total **Min Flow #6**	1 Front 16 Back 30° 17 Jets Total **Min Flow #6**
1 Front 3 Forward 45° 8 Back 30° 12 Jets Total **Min Flow #5**	1 Front 3 Forward 45° 8 Back 30° 12 Jets Total **Min Flow #5**	1 Front 3 Forward 45° 8 Back 30° 12 Jets Total **Min Flow #5**
1 Front 3 Forward 45° 12 Back 30° 16 Jets Total **Min Flow #6**	1 Front 3 Forward 45° 12 Back 30° 16 Jets Total **Min Flow #6**	1 Front 3 Forward 45° 12 Back 30° 16 Jets Total **Min Flow #6**
1 Front 3 Forward 45° 8 Radial 8 Back 30° 20 Jets Total **Min Flow #7**	1 Front 3 Forward 45° 8 Radial 8 Back 30° 20 Jets Total **Min Flow #7**	1 Front 3 Forward 45° 8 Radial 8 Back 30° 20 Jets Total **Min Flow #7**
1 Front 8 Radial 9 Jets Total **Min Flow #4**	1 Front 8 Radial 9 Jets Total **Min Flow #4**	1 Front 8 Radial 9 Jets Total **Min Flow #4**
1 Front 16 Radial 17 Jets Total **Min Flow #6**	1 Front 16 Radial 17 Jets Total **Min Flow #6**	1 Front 16 Radial 17 Jets Total **Min Flow #6**

*See details on all connection types in Section I.

15,000 PSI (1,034 BAR)

FPC SERIES TUBE CLEANING NOZZLES					
PART NO.	FPC1	FPC3	FPC4	FPC5	FPC6
NOZZLES SHOWN AS ACTUAL SIZE					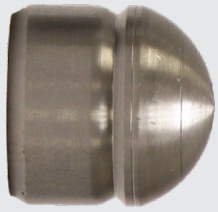
BLANK PART NO.	53847	53486	53484	53483	53482
INLET CONNECTION*	1/16″ NPT Female*	1/8″ NPT Female*	1/4″ NPT Female*	3/8″ NPT Female*	1/2″ NPT Female*
OUTSIDE DIAMETER	.370″ | 9.4 mm	.500″ | 12.7 mm	.620″ | 15.7 mm	870″ | 22.1 mm	1.00″ | 25.4 mm
OVERALL LENGTH	.51″ | 13.0 mm	.58″ | 14.7 mm	.75″ | 19.1 mm	.88″ | 22.4 mm	1.00″ | 25.4 mm
PATTERNS - NUMBER OF JETS BY LOCATION					
PATTERN 1 FLEX OR RIGID LANCES	1 Front 6 Back 30° 7 Jets Total **Min Flow #2**	1 Front 6 Back 30° 7 Jets Total **Min Flow #2**	1 Front 8 Back 30° 9 Jets Total **Min Flow #4**	1 Front 8 Back 30° 9 Jets Total **Min Flow #4**	1 Front 8 Back 30° 9 Jets Total **Min Flow #4**
PATTERN 2 FLEX OR RIGID LANCES	1 Front 12 Back 30° 13 Jets Total **Min Flow #5**	1 Front 12 Back 30° 13 Jets Total **Min Flow #5**	1 Front 16 Back 30° 17 Jets Total **Min Flow #6**	1 Front 16 Back 30° 17 Jets Total **Min Flow #6**	1 Front 16 Back 30° 17 Jets Total **Min Flow #6**
PATTERN 3 FLEX OR RIGID LANCES	1 Front 3 Forward 45° 6 Back 30° 10 Jets Total **Min Flow #4**	1 Front 3 Forward 45° 6 Back 30° 10 Jets Total **Min Flow #4**	1 Front 3 Forward 45° 8 Back 30° 12 Jets Total **Min Flow #5**	1 Front 3 Forward 45° 8 Back 30° 12 Jets Total **Min Flow #5**	1 Front 3 Forward 45° 8 Back 30° 12 Jets Total **Min Flow #5**
PATTERN 4 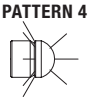 FLEX OR RIGID LANCES	1 Front 3 Forward 45° 8 Back 30° 12 Jets Total **Min Flow #5**	1 Front 3 Forward 45° 8 Back 30° 12 Jets Total **Min Flow #5**	1 Front 3 Forward 45° 12 Back 30° 16 Jets Total **Min Flow #6**	1 Front 3 Forward 45° 12 Back 30° 16 Jets Total **Min Flow #6**	1 Front 3 Forward 45° 12 Back 30° 16 Jets Total **Min Flow #6**
PATTERN 5 FLEX OR RIGID LANCES	1 Front 3 Forward 45° 6 Radial 6 Back 30° 16 Jets Total **Min Flow #6**	1 Front 3 Forward 45° 6 Radial 6 Back 30° 16 Jets Total **Min Flow #6**	1 Front 3 Forward 45° 8 Radial 8 Back 30° 20 Jets Total **Min Flow #7**	1 Front 3 Forward 45° 8 Radial 8 Back 30° 20 Jets Total **Min Flow #7**	1 Front 3 Forward 45° 8 Radial 8 Back 30° 20 Jets Total **Min Flow #7**
PATTERN 6 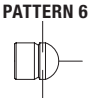 RIGID LANCE ONLY	1 Front 6 Radial 7 Jets Total **Min Flow #2**	1 Front 6 Radial 7 Jets Total **Min Flow #2**	1 Front 8 Radial 9 Jets Total **Min Flow #4**	1 Front 8 Radial 9 Jets Total **Min Flow #4**	1 Front 8 Radial 9 Jets Total **Min Flow #4**
PATTERN 7 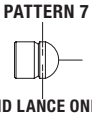 RIGID LANCE ONLY	1 Front 12 Radial 13 Jets Total **Min Flow #5**	1 Front 12 Radial 13 Jets Total **Min Flow #5**	1 Front 16 Radial 17 Jets Total **Min Flow #6**	1 Front 16 Radial 17 Jets Total **Min Flow #6**	1 Front 16 Radial 17 Jets Total **Min Flow #6**

*See details on all connection types in Section I.

C SERIES TUBE CLEANING NOZZLES		
PART NO.	C1	C2
NOZZLES SHOWN AS ACTUAL SIZE		
BLANK PART NO.	50541	50518
INLET CONNECTION*	5/16″-32 UNEF Female	5/16″-32 UNEF Female
OUTSIDE DIAMETER	.500″ | 12.7 mm	.560″ | 14.2 mm
OVERALL LENGTH	.40″ | 10.2 mm	.47″ | 11.9 mm
PATTERNS - NUMBER OF JETS BY LOCATION		
PATTERN 1 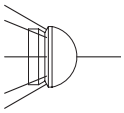	1 Front 8 Back 60° 9 Jets Total **Min Flow #4**	1 Front 8 Back 60° 9 Jets Total **Min Flow #4**
PATTERN 2 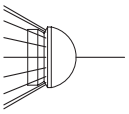	1 Front 16 Back 60° 17 Jets Total **Min Flow #6**	1 Front 16 Back 60° 17 Jets Total **Min Flow #6**
PATTERN 4 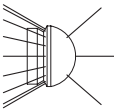	1 Front 3 Forward 45° 16 Back 60° 20 Jets Total **Min Flow #7**	1 Front 3 Forward 45° 16 Back 60° 20 Jets Total **Min Flow #7**

*See details on all connection types in Section I.

TOOLS/ NOZZLES

ACCESSORIES

Nozzle Locking Pin
Fits both C1 and C2 size nozzles.
Installed through hole in side of nozzle.
Part No. 25501 (Sold Individually)

Pin Removal Tool
For removal of pin above.
Part No. 25749

15,000 PSI (1,034 BAR)

FPT SERIES TUBE CLEANING NOZZLES			
PART NO.	FPT1	FPT3	FPT4
NOZZLES SHOWN AS ACTUAL SIZE			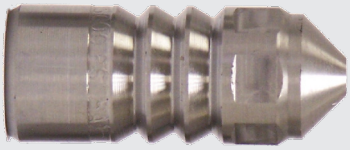
BLANK PART NO.	54153	54154	54156
INLET CONNECTION*	1/16″ NPT Female*	1/8″ NPT Female*	1/4″ NPT Female*
OUTSIDE DIAMETER	.370″ | 9.4 mm	.500″ | 12.7 mm	.665″ | 16.9 mm
OVERALL LENGTH	1.13″ | 28.7 mm	1.20″ | 30.5 mm	1.62″ | 41.1 mm
PATTERNS - NUMBER OF JETS BY LOCATION			
PATTERN 1 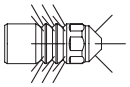	1 Front 2 Forward 45° 12 Back 30° 15 Jets Total **Min Flow #6**	1 Front 3 Forward 45° 18 Back 30° 22 Jets Total **Min Flow #8**	1 Front 3 Forward 45° 24 Back 30° 28 Jets Total **Min Flow #10**
PATTERN 2 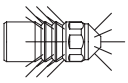	1 Front 3 Forward 45° 12 Back 45° 16 Jets Total **Min Flow #6**	1 Front 4 Forward 45° 18 Back 45° 23 Jets Total **Min Flow #8**	1 Front 6 Forward 45° 24 Back 45° 31 Jets Total **Min Flow #12**
PATTERN 3 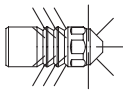	1 Front 2 Forward 45° 4 Radial 9 Back 30° 16 Jets Total **Min Flow #6**	1 Front 3 Forward 45° 6 Radial 12 Back 30° 22 Jets Total **Min Flow #8**	1 Front 4 Forward 45° 12 Radial 18 Back 30° 35 Jets Total **Min Flow #14**
PATTERN 4 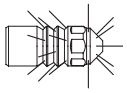	1 Front 2 Forward 45° 4 Radial 9 Back 45° 16 Jets Total **Min Flow #6**	1 Front 4 Forward 45° 6 Radial 12 Back 45° 23 Jets Total **Min Flow #8**	1 Front 8 Forward 45° 8 Radial 15 Back 45° 32 Jets Total **Min Flow #14**

*See details on all connection types in Section I.

FPT SERIES TUBE CLEANING NOZZLES	
FPT5	FPT6
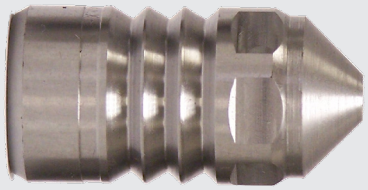	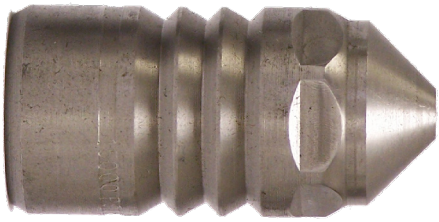
54157	54158
3/8″ NPT Female*	1/2″ NPT Female*
.870″ | 22.1 mm	1.040″ | 26.4 mm
1.73″ | 43.9 mm	2.10″ | 53.3 mm
PATTERNS - NUMBER OF JETS BY LOCATION	
1 Front 4 Forward 45° 24 Back 30° 29 Jets Total **Min Flow #12**	1 Front 4 Forward 45° 24 Back 30° 29 Jets Total **Min Flow #10**
1 Front 8 Forward 45° 24 Back 45° 33 Jets Total **Min Flow #14**	1 Front 8 Forward 45° 24 Back 45° 33 Jets Total **Min Flow #14**
1 Front 4 Forward 45° 12 Radial 18 Back 30° 35 Jets Total **Min Flow #14**	1 Front 4 Forward 45° 12 Radial 18 Back 30° 35 Jets Total **Min Flow #14**
1 Front 8 Forward 45° 12 Radial 18 Back 45° 39 Jets Total **Min Flow #15**	1 Front 8 Forward 45° 12 Radial 18 Back 45° 39 Jets Total **Min Flow #15**

*See details on all connection types in Section I.

15,000 PSI (1,034 BAR)

E SERIES TUBE CLEANING NOZZLES			
PART NO.	E0	E1	E2
NOZZLES SHOWN AS ACTUAL SIZE			
BLANK PART NO.	52134	51125	51123
INLET CONNECTION*	1/16″ NPT Female*	1/8″ NPT Female*	1/4″ NPT Female*
OUTSIDE DIAMETER	.375″ | 9.5 mm	.500″ | 12.7 mm	.665″ | 16.9 mm
OVERALL LENGTH	1.17″ | 29.7 mm	1.40″ | 35.6 mm	1.76″ | 44.7 mm
PATTERNS - NUMBER OF JETS BY LOCATION			
PATTERN 1 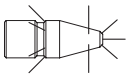 **FLEX OR RIGID LANCES**	1 Front 3 Forward 45° 4 Radial 6 Back 45° 14 Jets Total **Min Flow #5**	1 Front 3 Forward 45° 6 Radial 6 Back 45° 16 Jets Total **Min Flow #6**	1 Front 3 Forward 45° 6 Radial 6 Back 45° 16 Jets Total **Min Flow #6**
PATTERN 2 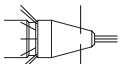 **FLEX OR RIGID LANCES**	N/A	4 Front 6 Radial 12 Back 45° 22 Jets Total **Min Flow #8**	4 Front 6 Radial 12 Back 45° 22 Jets Total **Min Flow #8**

*See details on all connection types in Section I.

E SERIES TUBE CLEANING NOZZLES	
E3	E4
51121	51119
3/8″ NPT Female*	1/2″ NPT Female*
2.10″ | 53.3 mm	2.27″ | 57.7 mm
.870″ | 22.1 mm	1.040″ | 26.4 mm
PATTERNS - NUMBER OF JETS BY LOCATION	
1 Front 3 Forward 45° 8 Radial 8 Back 45° 20 Jets Total **Min Flow #7**	1 Front 3 Forward 45° 8 Radial 8 Back 45° 20 Jets Total **Min Flow #7**
4 Front 8 Radial 16 Back 45° 28 Jets Total **Min Flow #10**	4 Front 8 Radial 16 Back 45° 28 Jets Total **Min Flow #10**

*See details on all connection types in Section I.

15,000 PSI (1,034 BAR)

EX SERIES TUBE CLEANING NOZZLES			
PART NO.	EX1	EX3	EX4
NOZZLES SHOWN AS ACTUAL SIZE			
BLANK PART NO.	54168	54169	54171
INLET CONNECTION*	1/16″ NPT Female*	1/8″ NPT Female*	1/4″ NPT Female*
OUTSIDE DIAMETER	.375″ | 9.5 mm	.500″ | 12.7 mm	.665″ | 16.9 mm
OVERALL LENGTH	1.29″ | 32.8 mm	1.45″ | 36.8 mm	1.72″ | 43.7 mm
PATTERNS - NUMBER OF JETS BY LOCATION			
PATTERN 1 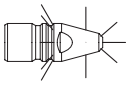 **FLEX OR RIGID LANCES**	1 Front 3 Forward 45° 4 Radial 8 Back 30° 16 Jets Total **Min Flow #6**	1 Front 4 Forward 45° 8 Radial 10 Back 30° 23 Jets Total **Min Flow #8**	1 Front 6 Forward 45° 8 Radial 16 Back 30° 31 Jets Total **Min Flow #12**
PATTERN 2 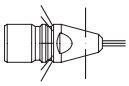 **FLEX OR RIGID LANCES**	N/A	4 Front 6 Radial 10 Back 30° 20 Jets Total **Min Flow #7**	4 Front 8 Radial 12 Back 30° 24 Jets Total **Min Flow #9**
PATTERN 3 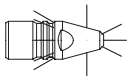 **FLEX OR RIGID LANCES**	1 Front 3 Forward 60° 3 Radial 6 Back 60° 13 Jets Total **Min Flow #5**	3 Front 3 Forward 60° 4 Radial 8 Back 60° 18 Jets Total **Min Flow #6**	4 Front 4 Forward 60° 8 Radial 12 Back 60° 28 Jets Total **Min Flow #10**
PATTERN 4 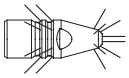 **FLEX OR RIGID LANCES**	N/A	2 Front 2 Forward 60° 6 Forward 30° 12 Back 45° 22 Jets Total **Min Flow #8**	3 Front 3 Forward 60° 8 Forward 30° 16 Back 45° 30 Jets Total **Min Flow #12**
PATTERN 5 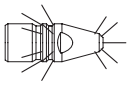 **FLEX OR RIGID LANCES**	1 Front 3 Forward 45° 3 Forward 30° 6 Back 30° 6 Back 60° 19 Jets Total **Min Flow #6**	1 Front 3 Forward 45° 3 Forward 30° 8 Back 30° 6 Back 60° 21 Jets Total **Min Flow #7**	1 Front 4 Forward 45° 4 Forward 30° 8 Back 30° 6 Back 60° 23 Jets Total **Min Flow #8**

*See details on all connection types in Section I.

EX SERIES TUBE CLEANING NOZZLES	
EX5	EX6
	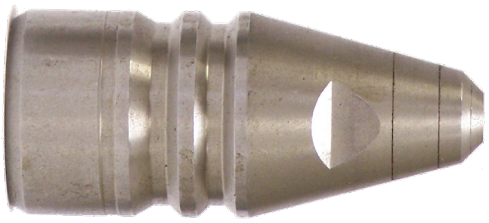
54172	54173
3/8″ NPT Female*	1/2″ NPT Female*
.875″ | 22.2 mm	1.040″ | 26.4 mm
2.21″ | 56.1 mm	2.37″ | 60.2 mm
PATTERNS - NUMBER OF JETS BY LOCATION	
1 Front 6 Forward 45° 8 Radial 16 Back 30° 31 Jets Total **Min Flow #12**	1 Front 6 Forward 45° 8 Radial 16 Back 30° 31 Jets Total **Min Flow #12**
4 Front 8 Radial 16 Back 30° 28 Jets Total **Min Flow #10**	4 Front 8 Radial 16 Back 30° 28 Jets Total **Min Flow #10**
4 Front 4 Forward 60° 8 Radial 12 Back 60° 28 Jets Total **Min Flow #10**	4 Front 4 Forward 60° 8 Radial 12 Back 60° 28 Jets Total **Min Flow #10**
3 Front 3 Forward 60° 8 Forward 30° 16 Back 45° 30 Jets Total **Min Flow #12**	4 Front 4 Forward 60° 8 Forward 30° 24 Back 45° 40 Jets Total **Min Flow #15**
1 Front 4 Forward 45° 4 Forward 30° 8 Back 30° 6 Back 60° 23 Jets Total **Min Flow #8**	1 Front 4 Forward 45° 4 Forward 30° 8 Back 30° 6 Back 60° 23 Jets Total **Min Flow #9**

*See details on all connection types in Section I.

MP SERIES TUBE CLEANING NOZZLES

PART NO.	MP1	MP2	MP3	MP4
NOZZLES SHOWN AS ACTUAL SIZE				
BLANK PART NO.	51114	51115	51116	51117
INLET CONNECTION*	1/16″ NPT Male*	1/8″ NPT Male*	1/4″ NPT Male*	3/8″ NPT Male*
OUTSIDE DIAMETER	3.75″ | 9.5 mm	.500″ | 12.7 mm	.625″ | 15.9 mm	75″ | 19.1 mm
OVERALL LENGTH	.96″ | 24.4 mm	1.21″ | 30.7 mm	1.43″ | 36.3 mm	1.60″ | 40.6 mm
PATTERNS - NUMBER OF JETS BY LOCATION				
PATTERN 1 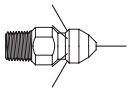	1 Front 6 Back 30° 7 Jets Total **Min Flow #2**	1 Front 8 Back 30° 9 Jets Total **Min Flow #4**	1 Front 8 Back 30° 9 Jets Total **Min Flow #4**	1 Front 8 Back 30° 9 Jets Total **Min Flow #4**
PATTERN 2 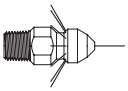	1 Front 12 Back 30° 13 Jets Total **Min Flow #5**	1 Front 16 Back 30° 17 Jets Total **Min Flow #6**	1 Front 16 Back 30° 17 Jets Total **Min Flow #6**	1 Front 16 Back 30° 17 Jets Total **Min Flow #6**
PATTERN 3 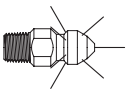	1 Front 3 Forward 45° 6 Back 30° 10 Jets Total **Min Flow #4**	1 Front 3 Forward 45° 8 Back 30° 12 Jets Total **Min Flow #5**	1 Front 3 Forward 45° 8 Back 30° 12 Jets Total **Min Flow #5**	1 Front 3 Forward 45° 8 Back 30° 12 Jets Total **Min Flow #5**
PATTERN 4 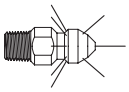	1 Front 3 Forward 45° 8 Back 30° 12 Jets Total **Min Flow #5**	1 Front 3 Forward 45° 6 Radial 6 Back 30° 16 Jets Total **Min Flow #6**	1 Front 6 Radial 7 Jets Total **Min Flow #2**	1 Front 12 Radial 13 Jets Total **Min Flow #5**
PATTERN 5 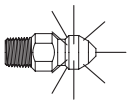	1 Front 3 Forward 45° 12 Back 30° 16 Jets Total **Min Flow #6**	1 Front 3 Forward 45° 8 Radial 8 Back 30° 20 Jets Total **Min Flow #7**	1 Front 8 Radial 9 Jets Total **Min Flow #4**	1 Front 16 Radial 17 Jets Total **Min Flow #6**
PATTERN 6 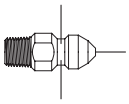	1 Front 3 Forward 45° 12 Back 30° 16 Jets Total **Min Flow #6**	1 Front 3 Forward 45° 8 Radial 8 Back 30° 20 Jets Total **Min Flow #7**	1 Front 8 Radial 9 Jets Total **Min Flow #4**	1 Front 16 Radial 17 Jets Total **Min Flow #6**
PATTERN 7 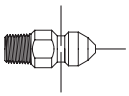	1 Front 3 Forward 45° 12 Back 30° 16 Jets Total **Min Flow #6**	1 Front 3 Forward 45° 8 Radial 8 Back 30° 20 Jets Total **Min Flow #7**	1 Front 8 Radial 9 Jets Total **Min Flow #4**	1 Front 16 Radial 17 Jets Total **Min Flow #6**

*See details on all connection types in Section I.

15,000 PSI (1,034 BAR)

MS SERIES TUBE CLEANING NOZZLES			
PART NO.	MS1	MS2	MS3
NOZZLES SHOWN AS ACTUAL SIZE			
BLANK PART NO.	51113	51060	50468
INLET CONNECTION**	#12-28UNF MALE	1/4″-28UNF MALE	5/16″-24UNF MALE
DIAMETER	.250″ | 6.4 mm	.312″ | 7.9 mm	.375″ | 9.5 mm
LENGTH	.95″ | 24.4 mm	1.06″ | 26.9 mm	1.12 | 28.4 mm
PATTERNS - NUMBER OF JETS BY LOCATION			
PATTERN 1 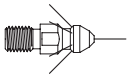 **FLEX OR RIGID LANCE**	1 Front 6 Back 45° 7 Jets Total **Min Flow #2**	1 Front 6 Back 45° 7 Jets Total **Min Flow #2**	1 Front 6 Back 45° 7 Jets Total **Min Flow #2**
PATTERN 2 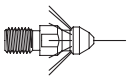 **FLEX OR RIGID LANCE**	1 Front 12 Back 45° 13 Jets Total **Min Flow #5**	1 Front 12 Back 45° 13 Jets Total **Min Flow #5**	1 Front 12 Back 45° 13 Jets Total **Min Flow #5**
PATTERN 3 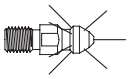 **FLEX OR RIGID LANCE**	1 Front 3 Forward 45° 6 Back 45° 10 Jets Total **Min Flow #4**	1 Front 3 Forward 45° 6 Back 45° 10 Jets Total **Min Flow #4**	1 Front 3 Forward 45° 6 Back 45° 10 Jets Total **Min Flow #4**
PATTERN 4 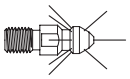 **FLEX OR RIGID LANCE**	1 Front 3 Forward 45° 8 Back 45° 12 Jets Total **Min Flow #5**	1 Front 3 Forward 45° 8 Back 45° 12 Jets Total **Min Flow #5**	1 Front 3 Forward 45° 8 Back 45° 12 Jets Total **Min Flow #5**
PATTERN 5 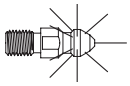 **FLEX OR RIGID LANCES**	1 Front 3 Forward 45° 6 Radial 6 Back 45° 16 Jets Total **Min Flow #6**	1 Front 3 Forward 45° 6 Radial 6 Back 45° 16 Jets Total **Min Flow #6**	1 Front 3 Forward 45° 6 Radial 6 Back 45° 16 Jets Total **Min Flow #6**
PATTERN 6 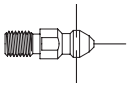 **RIGID LANCE ONLY**	1 Front 6 Radial 7 Jets Total **Min Flow #2**	1 Front 6 Radial 7 Jets Total **Min Flow #2**	1 Front 6 Radial 7 Jets Total **Min Flow #2**
PATTERN 7 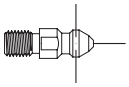 **RIGID LANCE ONLY**	1 Front 12 Radial 13 Jets Total **Min Flow #5**	1 Front 12 Radial 13 Jets Total **Min Flow #5**	1 Front 12 Radial 13 Jets Total **Min Flow #5**

*See details on all connection types in Section I.

15,000 PSI (1,034 BAR)

TP SERIES THRUSTERS TUBE CLEANING NOZZLES

PART NO.	TP4	TP5	TP6
NOZZLES SHOWN AS ACTUAL SIZE			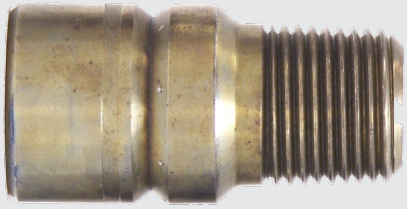
BLANK PART NO.	54709	52138	52151
INLET CONNECTION*	1/4″ NPT Female	3/8″ NPT Female	1/2″ NPT Female
OUTLET CONNECTION*	1/4″ NPT Male	3/8″ NPT Male	1/2″ NPT Male
OUTSIDE DIAMETER	.665″ | 16.9 mm	.875″ | 22.2 mm	1.040″ | 26.4 mm
OVERALL LENGTH	1.63″ | 41.4 mm	1.65″ | 41.9 mm	2.03″ | 51.6 mm
PATTERNS - NUMBER OF JETS BY LOCATION			
PATTERN 1 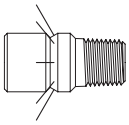	8 Back 30° **Min Flow #3**	8 Back 30° **Min Flow #3**	8 Back 30° **Min Flow #3**
PATTERN 2 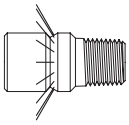	16 Back 30° **Min Flow #6**	16 Back 30° **Min Flow #6**	16 Back 30° **Min Flow #6**

*See details on all connection types in Section I.

ABRASIVE INJECTOR NOZZLE

- Provides powerful, cohesive mix of water and abrasive
- Easily replaceable, precision-drilled spool nozzle creates a powerful, focused waterjet and provides suction force to pull the abrasive media into the nozzle and mix with pressurized water. No air feed required!
- Wear-resistant, lightweight boron carbide abrasive nozzle
- Integral nozzle shut-off valve prevents clogging of abrasive
- Heat-treated stainless steel construction
- Lightweight, compact design
- Includes #5 Spool Nozzle

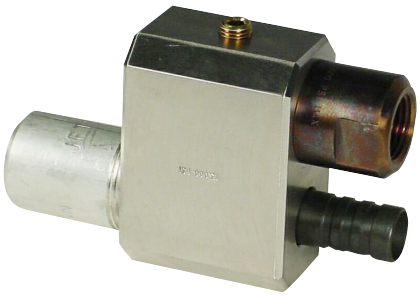

PART NO.	INLET WATER CONNECTION*	INLET ABRASIVE CONNECTION*	ASSEMBLY WEIGHT		MAX. OPERATING PRESSURE	
			lb	kg	psi	bar
52810	3/8″ NPT Female	1/2″ Hose Barb	1.5	0.7	15,000	1034

*See details on all connection types in Section I.

Before

After

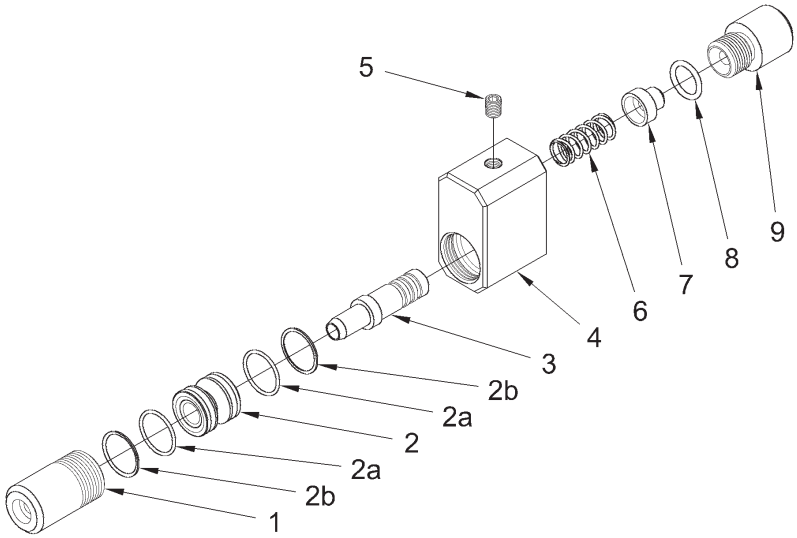

PART BREAKDOWN

ITEM	PART NO.	DESCRIPTION	ITEM	PART NO.	DESCRIPTION
1	52815	Abrasive Nozzle	4	52706	Body
2	53106	#2 Spool Nozzle	5	25395	Plug
	53107	#5 Spool Nozzle	6	26534	Spring
2a	26920	O-Ring	7	52711	Valve
2b	27030	Backup Ring	8	25228	O-Ring
3	52708	Hose Barb	9	52709	Adapter, 3/8″ NPT Female

SPOOL NOZZLES

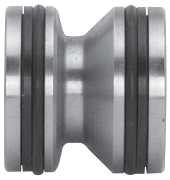

- Control flow of water through the nozzle
- Two standard flow ratings are available
- Custom drilled spool nozzles available

PART NO.	FLOW RATE	FLOW AT SPECIFIED PRESSURES (PSI / BAR)																	
		3,000	206	5,000	344	6,000	413	8,000	551	10,000	689	11,000	758	12,000	827	14,000	965	15,000	1034
		gpm	lpm	gpm	lpm	gpm	lpm	gpm	lpm	gpm	lpm	gpm	lpm	gpm	lpm	gpm	lpm	gpm	lpm
53106	2	1.4	5.3	1.8	7.1	1.9	7.1	2.2	8.3	2.5	9.4	2.6	9.8	2.7	10.2	3.0	11.3	3.1	12.1
53107	5	3.6	13.6	4.6	17.4	5.1	19.3	5.9	22.3	6.6	24.9	6.9	26.1	7.2	27.4	7.8	29.5	8.0	30.2

ABRASIVES

Sharpjet Garnet
55 lb (25 kg) bag

PART NO.	GRIT
70034-36	36
70034-50	50
70034-60	60
70034-80	80
70034-120	120

MaxxStrip Magnesium Sulphate/Kieserite
50 lb (23 kg) bag

PART NO.	MESH SIZE
J70378-C	20-40
J70378-M	40-60
J70378-F	60-80

Sofstrip Sodium Bicarbonate
50 lb (23 kg) bag

PART NO.	MESH SIZE
J70377-XL	60-80
J70377-M	80-100

Abrasive Pot
Part No. 27301

SAFETY APPAREL & EQUIPMENT

SAFETY. The one word every organization places at the top of the list when thinking about an employee. Jetstream understands the importance of conducting a safe environment when working in any high pressure waterblasting application. From personal protective equipment (PPE) to caution tape and signage, Jetstream provides a complete line of safety products to ensure a well protected jobsite and operator safety.

Products included in this section:

Visual Safety System

- Jetstream's pioneered Visual Safety System
- Safety Protection through color coding of parts
- Guns, Foot Guns, Hoses, Lances, Fittings, and Decals

Safety Shrouds

- Standard Waterblasting Safety Shrouds
- TST® Hose Shrouds
- TST Hose Connection Covers
- Covered Safety Whips

Flex Lance Safety

- Hand-Held Lance Grip and Accessories
- Pipe and Tube Cleaning Exit Safety Devices

Personal Protective Equipment (PPE)

- TurtleSkin® WaterArmor
- TST Waterjet Protection

Safety Accessories

- Safety Glasses, Goggles, Boots, and Gloves
- Face Shield, Hard Hats, and Ear Protection
- Protection Suits

Safety Tape, Signs and Decals

Safety Hose Checks

- Nylon
- Stainless Steel

VISUAL SAFETY SYSTEM

VISUAL SAFETY SYSTEM DECALS are highly visible and brightly colored to provide operators and supervisors with visual confirmation that all water-blast components, not colored, are appropriately matched to pressure ratings. **Part No. 71742**

PROTECT YOUR WORKERS AND THE WATERBLASTING EQUIPMENT WITH JETSTREAM'S VISUAL SAFETY SYSTEM.

Ensuring the operator is using the correct equipment is now identifiable from a distance. Jetstream's Visual Safety System uses highly visible and color-matched decals and additional markers to clearly show waterblast components in use are correctly and safely suited to current pump pressures.

Jetstream is now following the WJTA recommended colors to visually identify the pressure being used on a job site:

- 15,000 psi – GREEN
- 20,000 psi – BLUE
- 40,000 psi – ORANGE

All Jetstream lances, adapters, couplers and connectors are color-coded green to represent 15,000 psi (1034 bar) working pressure.

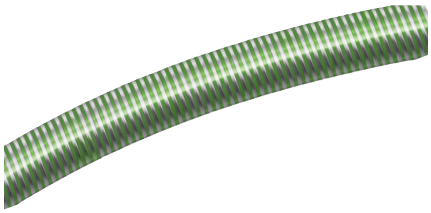

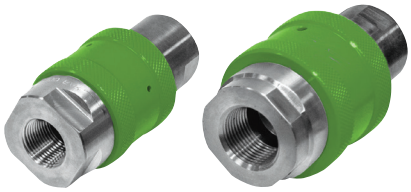

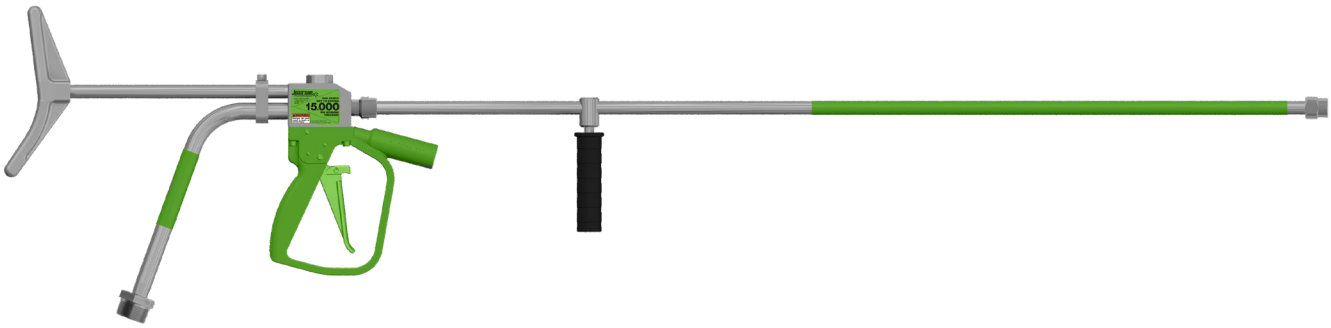

SAFETY SHROUDS

Safety shroud and whip hose sets provide additional hand gun operator protection against dangerous hose failures.

- Includes safety shroud, whip hose and adapter
- 3ft (1m) safety shrouds enclose the portion of the hose nearest the operator's body. Cordura over braided stainless steel construction.
- 6ft (1.8m) whip hoses should be changed periodically to ensure that the hose nearest the operator's body is always in good condition
- Plated steel adapters connect whip hose and shroud to gun

PART NO.	OVERALL LENGTH		HOSE CONNECTION*		HOSE I.D.		REPLACEMENT PARTS			MAX. OPERATING PRESSURE	
	ft	m	Inlet (to Hose)	Outlet (to Gun)	in	mm	SHROUD	NUT	WHIP HOSE**	psi	bar
3 ft (.91m) Safety Shrouds - Cordura Cover											
54060	6	1.8	1/2" NPT Male	1/2" NPT Female	.50	12.7	50288-03	50290	52241-0060505	15,000	1034
54065	6	1.8	1/2" NPT Male	1/2" NPT Female	.50	12.7	50796-03	50109	25513-0060505	10,000	689
6 ft (1.8m) Safety Shrouds - Cordura Cover											
54060-06	6	1.8	1/2" NPT Male	1/2" NPT Female	.50	12.7	50288-06	50290	52241-0060505	15,000	1034
J55690	6	1.8	1/2" NPT Male	1/2" NPT Female	.50	12.7	50796-06	50109	25513-0060505	10,000	689
10 ft (3m) Safety Shrouds - Cordura Cover											
54060-10	10	3	1/2" NPT Male	1/2" NPT Female	.50	12.7	50288-10	50290	52241-0100505	15,000	1034
6 ft (1.8m) Safety Shrouds - Hard Red Plastic Cover											
59391	6	1.8	1/2" NPT Male	1/2" NPT Female	.50	12.7	28860	58100	52241-0060505	15,000	1034
10 ft (3m) Safety Shrouds - Hard Red Plastic Cover											
58101	10	3.0	1/2" NPT Male	1/2" NPT Female	.50	12.7	28860-10	58100	52241-0100505	15,000	1034

*See Section I for a description of each connection type.
**Whip Hoses listed do not have abrasion or burst shield guards and are not intended for use near an operator without a safety shroud.

PART BREAKDOWN

ITEM	PART NO.	DESCRIPTION
1	Reference Above Chart	Shroud
2		Nut
3		Whip Hose

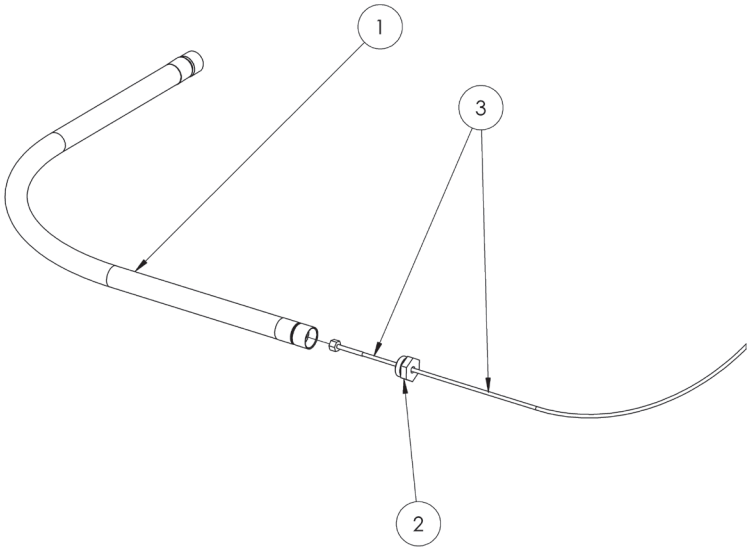

OPTIONAL WHIP HOSES

Part No. 52178-0060404: 6 ft (1.8 m), 3/8" NPT Male, 15,000 psi (1034 bar)
Part No. 25576-0060404: 6 ft (1.8 m), 3/8" NPT Male, 10,000 psi (689 bar)

TST® HOSE SHROUDS

PART NO.	SIZE
59008	36mm ID x 750mm long
59009	36mm ID x 1400mm long
59010	36mm ID x 180mm long
59011	47mm ID x 1400mm long swivel
59012	59mm ID x 750mm long
59013	59mm ID x 1400mm long
59014	59mm ID x 1800mm long

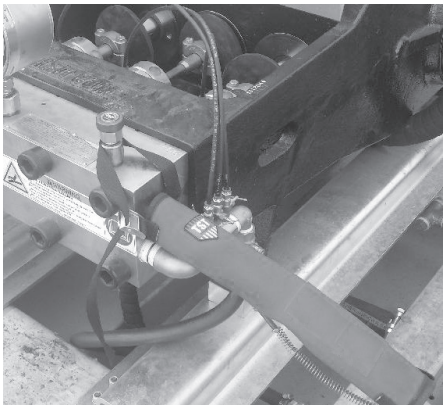

HOSE CONNECTION COVER

Perfect use to protect connections on pumps or foot panels. The cover has an adjustable strap and the other end has two loops for flexible use.

PART NO.	SIZE
62257	50mm ID x 400mm long

STRAIN RELIEF HOSE

Used for flex lance applications, the strain relief hose prevents kinking of the flex lance to extend service life.

- Rubber hose material is more flexible and manageable than thermoplastic flex lance material
- Connects the foot control gun to the flex lance

PART NO.	LENGTH		HOSE CONNECTION*		HOSE I.D.		MAX. OPERATING PRESSURE	
	ft	m	Inlet Connection* (to Foot Gun)	Outlet Connection* (to Flex Lance)	in	mm	psi	bar
50135	3	0.9	1/2" NPT Male	1/4" NPT Male	.50	12.7	15,000	1034
50138	3	0.9	1/2" NPT Male	1/8" NPT Male	.50	12.7	15,000	1034

* See Section I for a description of each connection type.

SAFETY HOSE CHECKS

Nylon Hose Check - High Strength
One Size Fits All.
Part No. 66743

Containment Grip Hose Check
Coated, Galvanized Carbon Steel

PART NO.	HOSE O.D.
63210	3/4" - 1 1/4"
59291	1 1/4" - 2"
61255	2" - 2 3/4"

Shackle Anchor for Containment Grip Hose Checks
Part No. 65670

FLEX LANCE SAFETY GRIP

For use in flex lance tube cleaning operations, the safety grip prevents a nozzle from unexpectedly exiting a tube by providing a stop through which the sleeve of the flex lance will not pass. Package includes handle, lance stop retainer for use on tubes up to 3/4" O.D. Choose lance stop below (not included). **Part No. 54164**

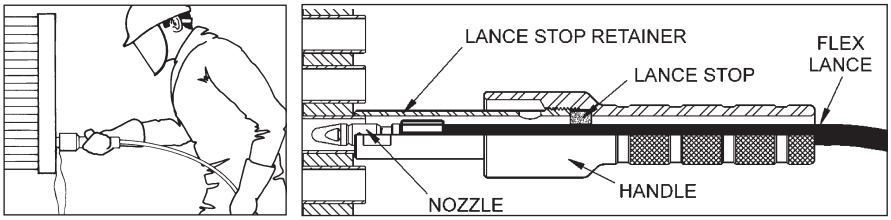

Lance Stops

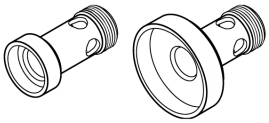

Lance Stop Retainers

Safety Grip Shield

SAFETY GRIP ACCESSORIES

Lance Stops: Choose lance stops below based on flex lance ID.

Lance Stop Retainers: Choose lance stop retainers based on the outside diameter of the tube to be cleaned.

Safety Grip Shield: Clear, plastic shield attaches to the safety grip handle to deflect water exiting the tube. **Part No. J55785**

LANCE STOP PART NO.	FLEX LANCE SERIES NUMBER	FLEX LANCE NOMINAL I.D.	
		in	mm
51779	27560	5/16	8
51044*	26108	1/4	6
51038*	26106	3/16	5
51036*	26104	5/32	4
	28596	1/8	3

PART NO.	LENGTH
51055	for tubes up to 3/4" O.D. (included in package)
51425	for tubes up to 1" O.D.
51427	for tubes up to 2" O.D.

THE WARDEN™

The Jetstream Warden is an anti-withdrawal device used for pipe cleaning applications with pipes ranging from 5"-18". With the multiple mounting location points, the pipe shield provides complete pipe coverage with a lockable shutter to allow large debris removal. **Part No. 61447**

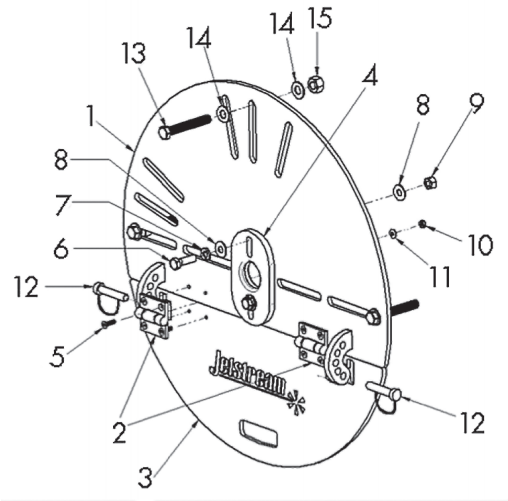

PART BREAKDOWN

ITEM	PART NO.	DESCRIPTION	ITEM	PART NO.	DESCRIPTION
1	61283	Pipe Cover Wldt, 1-19" Dia.	9	26562	Nut .38 C,Hx
2	61448	Shield Door Hinge	10	27449	Nut #10-24,Hx,Nylok
3	61284	Tilt Panel Wldt	11	J70804	Washer #10 Flat
4	61288	Dia. Adjustment Plate	12	61449	.375" Dia. Locking Pin
5	61461	Capscrew #10-24 X .87	13	61450	Capscrew .43 C X 3.0 SS
6	27126	Capscrew .38 C X 1.25	14	59229	Washer .44 Flat
7	25249	Washer .38 Lock	15	26834	Nut .44 F,Hx Lock
8	25251	Washer .38 Flat			

CENTRALIZERS

- Three models are available.
- Supports the tool while providing a controlled, even cleaning along with damage protection.

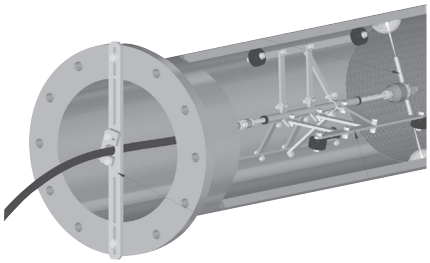

SKID STYLE

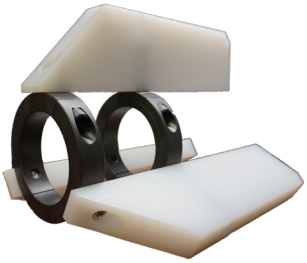

Used in pipes with and without elbows up to 10 in. (250 mm) in diameter. Designed to be used with RotoMag™ X22 and Swivel X15/X22.

REPLACEMENT RUNNERS

Three plastic runners and six screws.

PART NO.	DIAMETER	
	in	mm
66104-06	6.0	150
66104-08	8.0	200
66104-10	10.0	250

ROTOMAG X22		
PART NO.	DIAMETER	
	in	mm
63842-ROTO-6	6.0	150
63842-ROTO-8	8.0	200
63842-ROTO-10	10.0	250

NOTE: Does not include nipple or fittings.

RotoMag X22 in Skid Centralizer

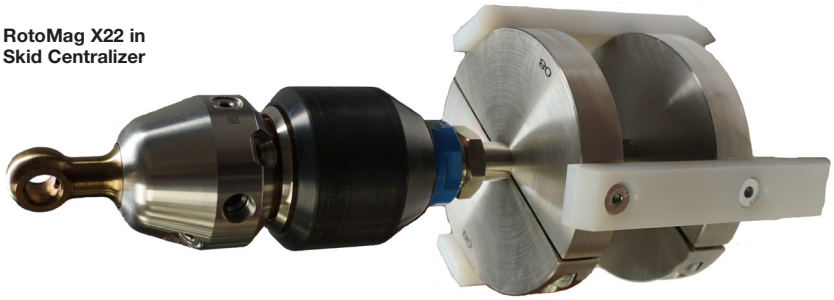

RELATED ITEMS

Use 20K fittings listed below and adapt to 15K hose using proper fittings.

PART NO.	DESCRIPTION
29108-08	3/4" MP LH Tube Nipple
28383 (2)	3/4" MP Gland
28384 (2)	3/4" MP Collar

Swivel in Skid Centralizer

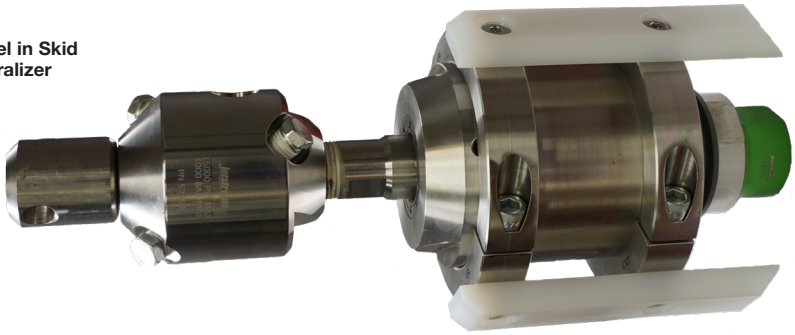

SWIVEL X15/X22		
PART NO.	DIAMETER	
	in	mm
63842-SWVL-6	6.0	150
63842-SWVL-8	8.0	200
63842-SWVL-10	10.0	250

CAGE STYLE

Recommended for navigating complex piping arrangements to clean built up debris. Designed for RotoMag X22 (clamp to nipple), Swivel X15/X22 (clamp to tool), and H_3Orbiter (clamp to tool).

RotoMag X22 with Nozzle Extensions in Cage Centralizer

ROTOMAG X22		
PART NO.	DIAMETER	
	in	mm
63843-ROTO	18.75	475

63843-ROTO does not include nipple or fittings recommended as follows:

RELATED ITEMS

PART NO.	DESCRIPTION
55450-7	7" long 1/2" NPT Male Nipple
28903	1/2" NPTF x 3/4" MP Male Adapter (Nipple to Tool)
27722 (4)	Capscrew, .25 F x 1.0"

NOTE: *3/4" NPT Nipple WILL NOT fit in cage centralizer because OD is too large. If 1/2" NPT Nipple is used, quantity (4) of capscrew 27722 must be used for the clamps to fit. Hose to nipple adapter may be needed based on end fitting.

Swivel in Cage Centralizer

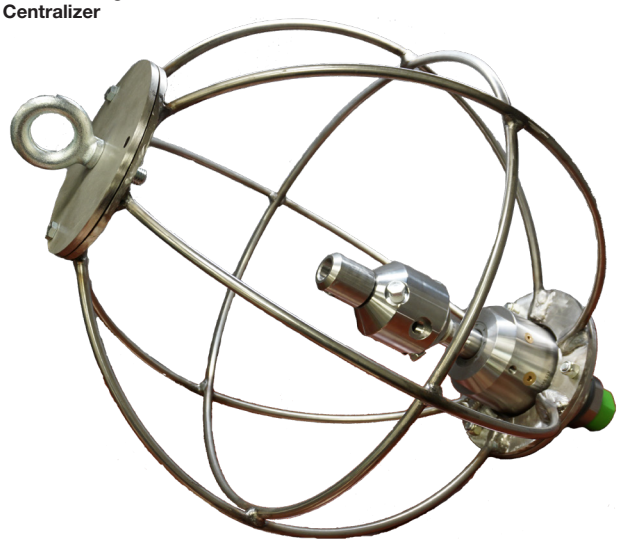

SWIVEL X15, X22		
PART NO.	DIAMETER	
	in	mm
63843-SWVL	18.75	475

15,000 PSI (1,034 BAR)

CAGE STYLE

H$_3$ORBITER		
PART NO.	DIAMETER	
	in	mm
63843-H3O	11.75	298

SCISSOR STYLE

Designed for straight pipe runs only. The adjustable frames allow for an effective pipe clean anywhere from 9-60 inches (230-1500 mm) in diameter. Compatible with most tools. Comes with a central lance (shown below) for mounting tools.

PART NO.	CONNECTION	PRESSURE	WEIGHT	LENGTH
SMALL 9-18" [230-460 mm] PIPE DIAMETER				
64452-S15-8	1/2" NPT	15K PSI	20 lb. (9 kg)	36 in. (915 mm)
64452-S15-12	3/4" NPT	15K PSI	20 lb. (9 kg)	36 in. (915 mm)
64452-S20	3/4" MP Male Tube	20K PSI	20 lb. (9 kg)	36 in. (915 mm)
64452-S40	9/16" HP Male Tube	40K PSI	20 lb. (9 kg)	36 in. (915 mm)
MEDIUM 13-40" [330-1000mm] PIPE DIAMETER				
64452-M15-8	1/2" NPT	15K PSI	32 lb. (15 kg)	48 in. (1220 mm)
64452-M15-12	3/4" NPT	15K PSI	32 lb. (15 kg)	48 in. (1220 mm)
64452-M20	3/4" MP Male Tube	20K PSI	32 lb. (15 kg)	48 in. (1220 mm)
64452-M40	9/16" HP Male Tube	40K PSI	32 lb. (15 kg)	48 in. (1220 mm)
LARGE 16-60" [410-1500 mm] PIPE DIAMETER				
64452-L15-8	1/2" NPT	15K PSI	40 lb. (18 kg)	72 in. (1850 mm)
64452-L15-12	3/4" NPT	15K PSI	40 lb. (18 kg)	72 in. (1850 mm)
64452-L20	3/4" MP Male Tube	20K PSI	40 lb. (18 kg)	72 in. (1850 mm)
64452-L40	9/16" HP Male Tube	40K PSI	40 lb. (18 kg)	72 in. (1850 mm)

SONETICS® APEX WIRELESS HEADSET

Headset
Part No. 64299 (wireless)
65911 (wireless w/Bluetooth)

Wireless Base Station
Part No. 66090

Portable Com Hub
Part No. 64298 (5/100)
65644 (10/100)

Charging Cases
Part No. 64300 (5-user)
65925 (10-user)

Sonetics APEX wireless headsets provide a communication solution for all members on your team. Operators today rely on eye-contact and hand signals to communicate when operating large, noisy machinery, including waterblasting systems.

What if you could know word-for-word what the other operator needs in an instant with NO interpretation required? Sonetics developed a headset that provides a piece-of-mind in an instant through actual voice communication, noise reduction, and noise filtration with an industry first in integrated personal sound dosimeter. Built to withstand extreme environments, Sonetics wireless systems are dustproof, watertight, and ready to perform in the same tough conditions you face every day.

Features:

- Secure interference-free communication with excellent range (up to 1,600 feet)
- EPA NRR of 20dB in both behind-the-head and hard-hat configurations
- Front microphones to provide situational awareness limited to no higher than 82dB
- Personal sound dosimeter measures the exposure to sound over time and adjusts headset volume to keep the operator's ears safe
- Auto-leveling microphone with automatic voice adjustments for exterior noise
- Noise suppression limits high impulse events from transmission
- Convertible headband to allow over-the-head or behind the head wear
- Customizable ruggedizer colors available to aid in identification of team members
- Integration with wired or wireless two-way portable radios
- Optional bluetooth integration for communication with cell phones, MP3 players, mobile radios, and computers
- In-case charging of headsets available when not in use

Contact your Jetstream Sales Manager for more details about the system that's right for you.

TST® WATERJET PROTECTION

TST products provide protection to the operator without compromising on comfort or quality. Two levels of protection are offered depending on the protection needs and working pressures. See chart below for specific protection levels.

PROTECTION LEVEL*	COLOR IDENTIFIER	SINGLE JET	ROTARY JET
10/28	YELLOW	14,500 psi/1000 bar	40,600 psi/2800 bar
20/30	ORANGE	30,000 psi/2000 bar	43,500 psi/3000 bar

*Protection levels are located on all articles for quick identification.

TST GAMMA KIT

Trousers and jacket with integrated hand protection.

PROTECTION LEVEL 10/28			PROTECTION LEVEL 20/30		
PART NO.	VENTILATED PART NO.*	SIZE	PART NO.	VENTILATED PART NO.*	SIZE
58962	58962-V	S/M	58963	58963-V	S/M
58901	58901-V	L/XL	58964	58964-V	L/XL
58902	58902-V	2XL/3XL	58965	58965-V	2XL/3XL
59873	59873-V	4XL/5XL	59874	59874-V	4XL/5XL
59875	59875-V	6XL	59876	59876-V	6XL

*Ventilated products consist of tubing throughout the suit with holes every five inches for complete coverage. (A cooling tube will need to be purchased with this system, as well. See page H-15.)

TST® DELTA KIT

Trousers, waistcoat, and hand protection.

PROTECTION LEVEL 10/28			PROTECTION LEVEL 20/30		
PART NO.	VENTILATED PART NO.*	SIZE	PART NO.	VENTILATED PART NO.*	SIZE
58956	58956-V	S/M	58959	58959-V	S/M
58957	58957-V	L/XL	58960	58960-V	L/XL
58958	58958-V	2XL/3XL	58961	58961-V	2XL/3XL

*Ventilated products consist of tubing throughout the suit with holes every five inches for complete coverage. (A cooling tube will need to be purchased with this system, as well. See page H-15.)

TST SIGMA KIT

Waistcoat & overall with integrated hand protection.

PROTECTION LEVEL 10/28

PART NO.	SIZE
58944	S
58945	M
58946	L
58947	XL
58948	2XL
58949	3XL

PROTECTION LEVEL 20/30

PART NO.	SIZE
58950	S
58951	M
58952	L
58953	XL
58954	2XL
58955	3XL

TST TROUSERS

Individual item.

PROTECTION LEVEL 10/28

PART NO.	VENTILATED PART NO.*	SIZE
58966	58966-V	S/M
58967	58967-V	L/XL
58968	58968-V	2XL/3XL

PROTECTION LEVEL 20/30

PART NO.	VENTILATED PART NO.*	SIZE
58969	58969-V	S/M
58970	58970-V	L/XL
58971	58971-V	2XL/3XL

*Ventilated products consist of tubing throughout the suit with holes every five inches for complete coverage. (A cooling tube will need to be purchased with this system, as well. See page H-15.)

TST® JACKET

Integrated hand protection. Individual item.

PROTECTION LEVEL 10/28

PART NO.	SIZE
58972	S/M
58973	L/XL
58974	2XL/3XL

PROTECTION LEVEL 20/30

PART NO.	SIZE
58975	S/M
58976	L/XL
58977	2XL/3XL
59492	4XL/5XL

TST WAISTCOAT

Individual item.

PROTECTION LEVEL 10/28	
PART NO.	SIZE
58978	M-2XL
58979	3XL

PROTECTION LEVEL 20/30	
PART NO.	SIZE
58980	M-2XL
58981	3XL

TST OVERALL

Integrated hand protection. Individual item.

PROTECTION LEVEL 10/28	
PART NO.	SIZE
58982	S
58983	M
58984	L
58985	XL
58986	2XL
58987	3XL

PROTECTION LEVEL 20/30	
PART NO.	SIZE
58988	S
58989	M
58990	L
58991	XL
58992	2XL
58993	3XL

TST HAND PROTECTION

Sold individually.

PROTECTION LEVEL 10/28	
PART NO.	SIZE
58904	LEFT
58905	RIGHT

PROTECTION LEVEL 20/30	
PART NO.	SIZE
58998	LEFT
58999	RIGHT

TST® APRON

One size fits all. Individual Item.

PART NO.	PROTECTION LEVEL
58903	10/28
58997	20/30

TST WAISTCOAT WITH APRON

One size fits all. Individual Item.

PART NO.	PROTECTION LEVEL
58955	10/28
58996	20/30

TST BOOTS 3000

PART NO.	SIZE APPROX. US MEN
59000	8.5
59001	9
59002	10
58932	11
59003	12
59004	13
59005	14

TST GAITERS

One size fits all. Pair.

PART NO.	PROTECTION LEVEL
59007	20/30

TST BALACLAVA

Comfort accessory for use under protective gear. One size fits all.

PART NO.	PROTECTION LEVEL
59006	N/A

VORTEX COOLER TUBE

(Not shown.) Personal Air Conditioner. For full body cooling, a 25cfm or 35cfm tube is recommended. If the tube is not sized for the available air supply, it will perform poorly.

PART NO.	CFM
61415	25 CFM
51416	35 CFM

TST GREASE REMOVER

PART NO.	L
59015	0.5
59016	2.5

TST® PRO-OPERATOR TROUSERS

Individual item. Grey or High Visibility Orange.

GREY		HIGH VISIBILITY	
PROTECTION LEVEL 5/5/2		PROTECTION LEVEL 5/5/2	
PART NO.	SIZE	PART NO.	SIZE
66694	XS	66715	XS
66695	S	66716	S
66696	M	66717	M
66697	L	66718	L
66698	XL	66719	XL
66699	XXL	66720	XXL
66700	3XL	66721	3XL

TST PRO-OPERATOR JACKET WITH HOOD

Individual item. Grey or High Visibility Orange.

GREY		HIGH VISIBILITY	
PROTECTION LEVEL 5/5/2		PROTECTION LEVEL 5/5/2	
PART NO.	SIZE	PART NO.	SIZE
66687	XS	66708	XS
66688	S	66709	S
66689	M	66710	M
66690	L	66711	L
66691	XL	66712	XL
66692	XXL	66713	XXL
66693	3XL	66714	3XL

TST PRO-OPERATOR VEST

Individual item. High Visibility Orange.

HIGH VISIBILITY	
PROTECTION LEVEL 5/5/2	
PART NO.	SIZE
66729	S
66730	M
66731	L
66732	XL
66733	XXL
66734	3XL

TST® PRO-OPERATOR OVERALL WITH HOOD

Individual item. Grey or High Visibility Orange.

GREY		HIGH VISIBILITY	
PROTECTION LEVEL 5/5/2		PROTECTION LEVEL 5/5/2	
PART NO.	SIZE	PART NO.	SIZE
66701	XS	66722	XS
66702	S	66723	S
66703	M	66724	M
66704	L	66725	L
66705	XL	66726	XL
66706	XXL	66727	XXL
66707	3XL	66728	3XL

TST HEAD PROTECTION

Helmet with visor and hearing protectors. One size fits all.

PART NO.	PROTECTION LEVEL
65498	20/30

TST HELMET

Helmet with CE marking approved to SS-EN397:2012. Adjustable. One size fits all.

PART NO.	PROTECTION LEVEL
66645	20/30

TST HEARING PROTECTION

One size fits all. Adjustable.
Part No. 66647

TST VISOR HOLDER

Visor holder for TST Head Protection.
Part No. 66646

TST CHIN STRAP

3-point chin strap for use with TST Head Protection.
Part No. 66648

TST PRO-OPERATOR GLOVES

Includes inner gloves. Pair.

PART NO.	PROTECTION LEVEL
60396	5/5/2

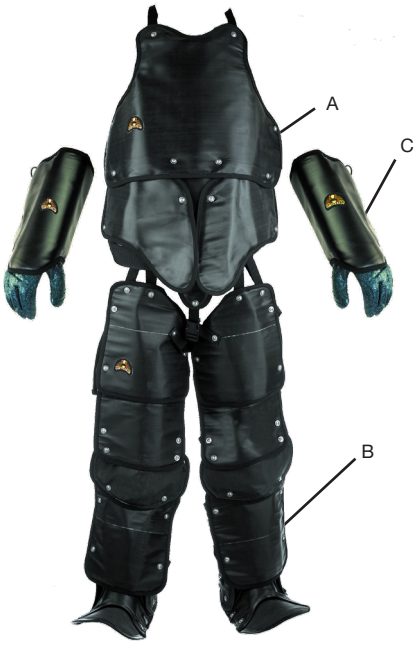

TURTLESKIN® WATERARMOR

Provides waterblast operators with a high level of protection from high-pressure waterjets.

- Proven protection up to 40,000 psi (2750 bar)
- Lightweight, hinged panel design provides flexibility without fatigue
- Modular design—buy only what you need
- Open back keeps operator cooler longer

ITEM(S)	PART NO.	DESCRIPTION
TurtleSkin Main Parts		
A	27885C	Safety Suit—Torso & Chaps
B	27884	Gaiters (Shins & Feet)
C	28589	Gauntlets (Hands & Forearms)
Repair Kits		
-	71613	Torso
-	71614	Chaps
-	71615	Gaiters

SAFETY ACCESSORIES

Safety Glasses
PREMIUM
Clear/Gray anti-fog lens, adjustable nose pad, scratch resistant, UV-blocking, Z87+ approved.
Part No. J70316

Safety Glasses
PREMIUM
Gray/Gray anti-fog lens, adjustable nose pad, scratch resistant, UV-blocking, Z87+ approved.
Part No. J70317

Safety Glasses
ECONOMY
Scratch resistant, UV-blocking.
Part No. J70318

Safety Goggles
Soft frame with impact and chemical splash protection, anti-fog lens, Neoprene strap, Z87+ approved.
Part No. 25620

Face Shield
Multiple Mounting Slots. Polycarbonate.
Part No. 26255

Face Shield
Multiple Mounting Slots. Polycarbonate.
Part No. 26255T

Face Shield
Multiple Mounting Slots with Velcro strip. Polycarbonate.
Part No. 26255V

Universal Face Shield Bracket
Fits the brim of most hard hats. Plastic.
Part No. 25621

Ear Plugs
Uncorded with noise reduction rating: 33. Molded Polyurethane Foam.
Part No. J70321

15,000 PSI (1,034 BAR)

Hard Hat
White, six-point nylon suspension with ratchet knob. Hard Plastic.
Part No. J70315

Hard Hat
White, six-point nylon suspension with pin-lock adjustment. Hard Plastic.
Part No. 25625

Ear Plugs
Corded with noise reduction rating: 30. Molded Polyurethane Foam.
Part No. J70322

Premium 16" Boots
Steel toe, waterproof, meets ANSI Z41 PT99 Sect 1, 2, & 5. SIZE 6 to 14. Black/ Yellow Rubber. **Part No. J70324-size**

Economy 16" Boots
Steel Toe and waterproof. SIZE 7 to 13. Black Rubber.
Part No. 27168-size

12" Boots
Steel toe, waterproof, meets ANSI Z41 PT99 Sect 1. SIZE 6 to 14. Copper/Tan Neoprene. **Part No. J70326-size**

Shin & Foot Guards
Padded instep and nylon straps. Aluminum.
Part No. 26894

Water Protection Suits
Jacket, bib overall pants & face shield bib. PVC/Polyester. SIZES M-5XL **Part No. J70323-size**

Water Protection Suits
Jacket and bib overall pants. PVC/Polyester. SIZE M-7XL **Part No. 25617-size**

Gloves
14" PVC/NITRILE. Chemical resistant with rough finish. Fully coated with jersey lining. SIZE 10. **Part No. 25624**

Gloves
12" PVC Rough Finished gloves. Cotton Lining. SIZE 10. **Part No. J70327**

SAFETY TAPE, SIGNS AND DECALS

Part No. 26247
Health Hazard Caution Sign
8½" x 11"

Part No. 26253
Restricted Caution Sign
8½" x 11"

Part No. 25614
Waterblasting Danger Sign
8½" x 11"

Part No. 28501
Safety Warning Sticker

Part No. 57998
Safety Tape "Caution: Waterblasting in Progress"
Dimensions:
3"x 300ft
75mm x 90 m

Part No. J70413
Safety Tape "Danger: Hydroblasting"
Dimensions:
3" x 1000ft
75mm x 300 m

15,000 PSI (1,034 BAR)

Part No. 71147
Safety Warning Decal Set
(Unit and Fluid End)

Part No. 71147-FE
Safety Warning Decal Set
(Fluid End Only)

Part No. 71742
15K Color Coded Pressure Decal

Part No. 29956
Jetstream Unit Decal - Blue

Part No. 26717
Jetstream Unit Decal - White

SAFETY LITERATURE AND MEDIA

Part No. 64625
WJTA® Industry Best Practices for High Pressure Waterjetting Equipment

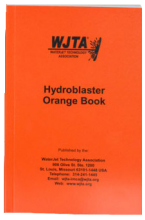

Part No. 66858
WJTA® Hydroblaster Orange Book
Pocket sized.

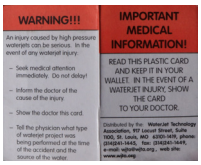

Part No. 29263
Safety Warning Medical Card

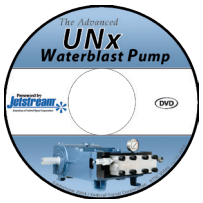

Part No. 28634
Jetstream Unit Decal - White

UNIT CONVERSIONS & FORMULAS

MEASUREMENT	CONVERSION	EXAMPLE
LENGTH	1 in. = 25.4 mm	12 in. x 25.4 = 304.8 mm
	1 in. = .0254 m	120 in. x .0254 = 3.05 m
	1 ft. = .3048 m	12 ft. x .3048 = 3.68 m
	1 mm = .0394 in.	100 mm x .0394 = 3.94 in.
	1 m = 39.37 in.	10 m x 39.37 = 393.7 in.
	1 m = 3.281 ft.	10 m x 3.281 = 32.81 ft.
VOLUME	1 gal = 3.785 l	10 gal x 3.785 = 37.85 l
	1 liter = .2642 gal	100 liters x 26.42 = 26.42 gal
WEIGHT	1 lb. = .454 kg	10 lbs. x .454 = 4.54 kg
	1 kg = 2.205 lbs.	10 kg x 2.205 = 22.05 lbs.
PRESSURE	1 psi = .06895 bar	40,000 psi x .06895 = 2,750 bar
	1 bar = 14.503 psi	2,750 bar x 14.503 = 40,000 psi
FLOW	1 gpm = 3.785 lpm	30 gpm x 3.785 = 113.55 lpm
	1 lpm = .2642 gpm	100 lpm x .264 = 26.42 gpm
FORCE	1 lb. = 4.448 N	100 lbs. x 4.448 = 444.8 N
	1 N = .2248 lbs.	900 N x .2248 = 202.32 lbs.
TORQUE	1 lb.-ft. = 1.3567 N-m	100 lb.-ft. x 1.3567 = 135.67 N-m
	1 N-m = .737 lb.-ft.	100 N-m x .737 = 73.7 lb.-ft.
POWER	1 hp = .7457 kW	50 hp x .7457 = 37.29 kW
	1 kW = 1.341 hp	50 kW x 1.341 = 67.05 hp

FORMULA	ENGLISH UNITS	METRIC UNITS
Power Requirements*	hp = gpm x psi / 1550	kW = lpm x bar / 540

*Formulas assume 90% mechanical efficiency

Actual Size
Reference Chart

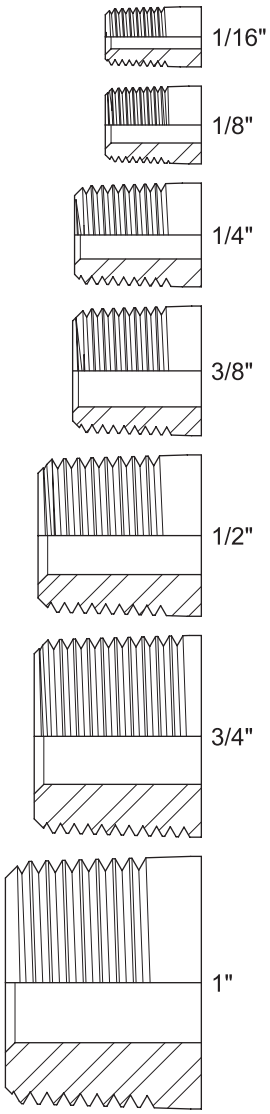

(continued on I-3)

CONNECTION TYPES

Several connection types are used at pressures of 15,000 psi (1034 bar) and below. The purpose of this section is to allow users to identify the connections needed and provide information on the features and proper use of each.

PIPE THREADS (NPT)

- Most widely used connection type at pressures of 15,000 psi (1034 bar) and below.
- NPT threads are tapered so that, as the thread engagement between the male and female threaded components increases, the threads get closer until the connection becomes tight.

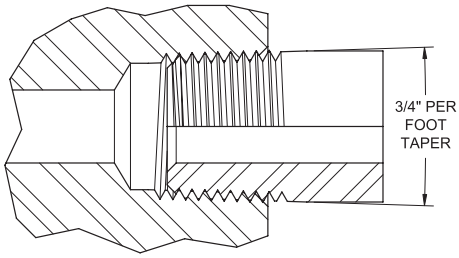

- Unlike connection types that seal using closely machined seating surfaces or soft seals (such as O-rings), pipe threads seal around the threads, with Teflon® tape or pipe joint compound applied to the threads to prevent water from escaping through the tiny gaps between the male and female threads.
- Pipe threads have a significant potential for galling — where threads seize together as threaded components are tightened. Some factors that affect the likelihood of galling are:
  - **Materials:** many stainless steels have a higher tendency to gall than carbon steels, and like materials are more prone to galling than two different materials.
  - **Thread quality:** a rough finish on thread surfaces increases the potential for galling.
  - **Thread profile:** some manufacturers allow sharp edges at the crest of each thread, causing interference with the thread roots of mating part (see illustration below) and significantly increasing the risk of galling. All pipe threads on Jetstream products are machined with flat thread crests to prevent damage to mating parts.
- **Copper plating** is used on Jetstream stainless steel fittings with male pipe threads to prevent galling.
- **Thread lubricants (anti-seize)** applied to the male threads before engagement greatly reduce the chance of galling. Consistent use of thread lubricant is **strongly recommended** for all connections but absolutely essential for pipe threads or stainless steel connections.
- Jetstream pipe threads are machined to a special specification to ensure greater thread engagement for increased safety and to reduce the risk of galling.

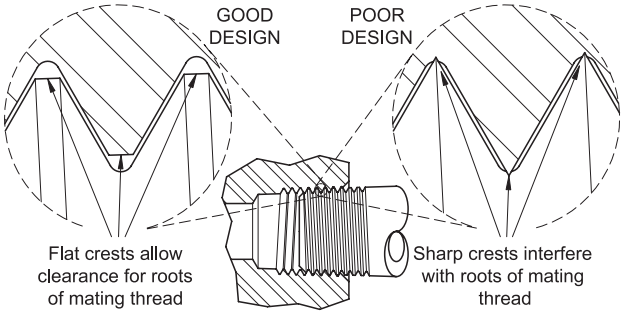

CONNECTION TYPES

PIPE THREAD CONNECTION INSTRUCTIONS

1. Wrap Teflon® tape three or four times around the male threads in a clockwise direction (if looking at the face of the threaded end of the part).

2. Brush on nickel- or silver-based thread lubricant (anti-seize) over the Teflon.

3. Install male threaded component into female threaded component and hand tighten.

4. Wrench tighten 1/2 to 2 turns past hand tight.

Actual Size
Reference Chart
(continued)

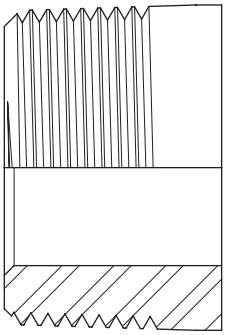

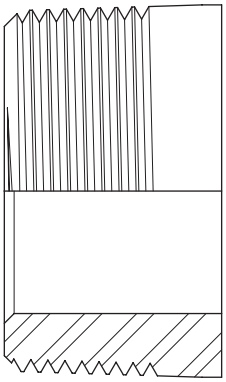

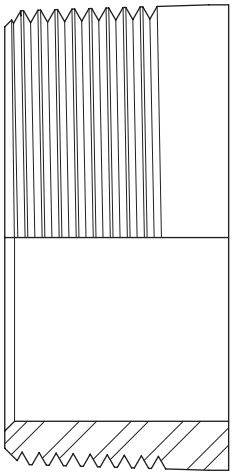

TECHNICAL

CONNECTION TYPES

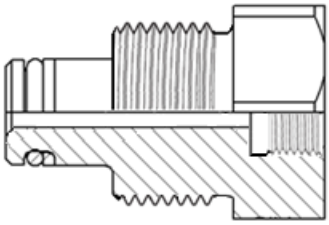

JETSTREAM HF MALE ADAPTERS

For use with 5015Q and 6015 pumps, the Jetstream HF connection features an easily replaceable seal to prevent wear or damage to the manifold and a large bore to minimize pressure drop through fittings.

- Copper plated for galling resistance
- Stainless steel

Actual Size
Reference Chart

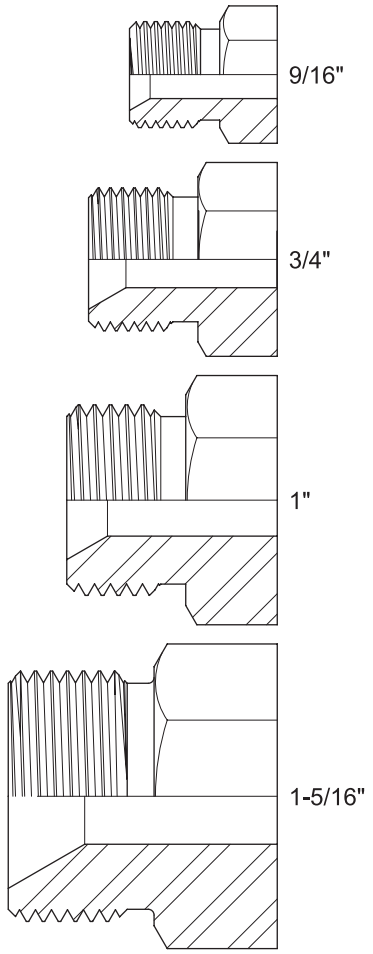

TYPE M

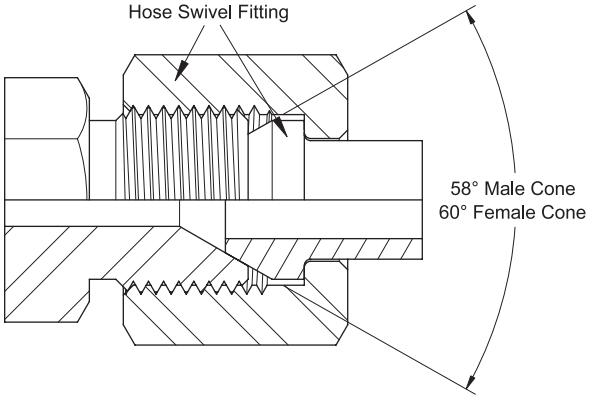

- Industry standard connection
- Designed for fast, simple connection of waterblast hoses and lances to waterblast equipment
- Male conical seat protected from damage by the hose swivel nut
- Unlike medium pressure connections, the seating surfaces do not rotate against each other when connections are made, resulting in a more reliable, longer lasting connection
- Verify pressure rating of Type M hoses and fittings before use as the connection type is used for a wide range of pressures due to its ease of use and reliability

SIZE	CONNECTION THREAD	RECOMMENDED TORQUE	
		FT-LB	N-M
9/16" Type M	9/16" – 18UNF	30	41
3/4" Type M	3/4" – 16UNF	45	61
1" Type M	1" – 12UNF	70	95
1-5/16" Type M	1-5/16" – 12UN	110	149

Note: Always apply thread lubricant (anti-seize) to male threads before assembling waterblast connections. See page E-1 for thread lubricants available from Jetstream.

CONNECTION TYPES

METRIC

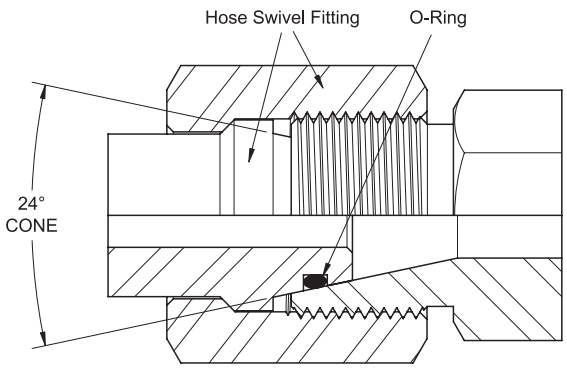

- Internationally used connection
- Designed for fast, simple connection of waterblast hoses and lances to waterblast equipment
- Male conical seat protected from damage by the hose swivel nut

CONNECTION SIZES
M22 x 1.5
M24 x 1.5
M36 x 2.0
M43 x 2.0

Note: Always apply thread lubricant (anti-seize) to male threads before assembling waterblast connections. See page E-1 for thread lubricants available from Jetstream.

Actual Size
Reference Chart

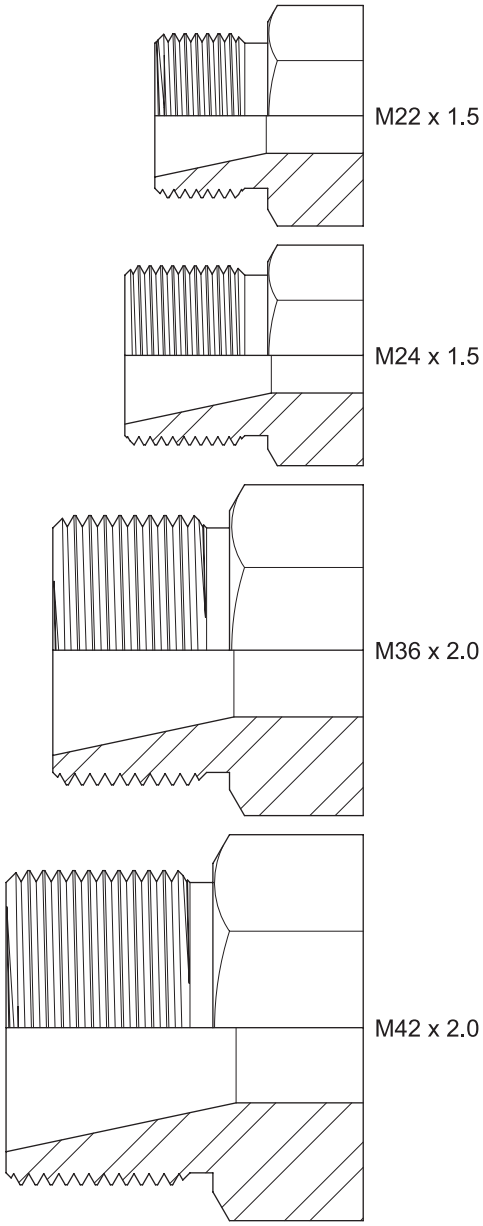

Actual Size
Reference Chart

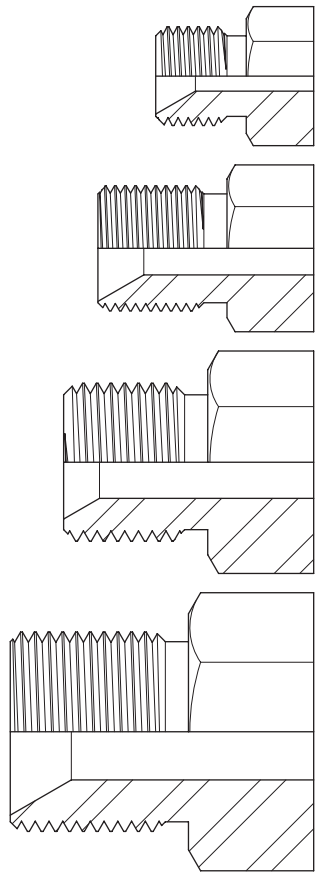

CONNECTION TYPES

BRITISH STANDARD PIPE (BSPP)

- Industry standard connection most common in Europe
- Designed for fast, simple connection of waterblast hoses and lances to waterblast equipment
- Male conical seat protected from damage by the hose swivel nut
- Products with BSPP connections featured in this catalog are straight thread connection using a metal-to-metal conical seat as the sealing method. BSPP is also available as a tapered thread similar in function to NPT pipe threads, but this variation is not found on products in this catalog.

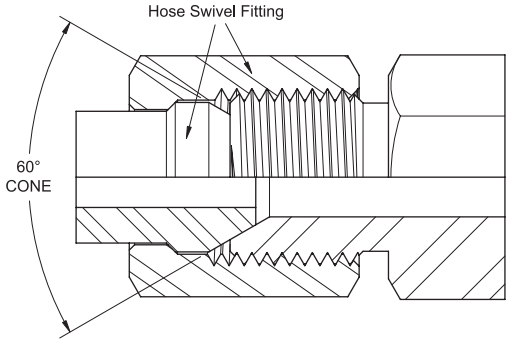

SIZE	CONNECTION TYPES
G1/4	1/4"-19BSPP
G3/8"	3/8"-19BSPP
G1/2"	1/2"-14BSPP
G3/4"	3/4"-14BSPP

Note: Always apply thread lubricant (anti-seize) to male threads before assembling waterblast connections. See page E-1 for thread lubricants available from Jetstream.

Actual Size
Reference Chart

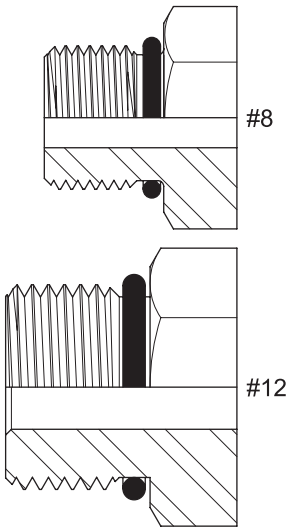

STRAIGHT BOSS

- Hydraulic connection adapted for waterblast use with American Aero pumps
- Sealing accomplished by O-ring behind male threads
- Used at 10,000 psi 689 bar) or below

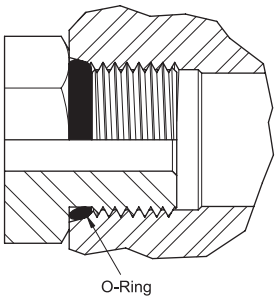

SIZE	CONNECTION THREAD
#8	3/4"-16UNF
#12	1-1/16"-12UN

Note: Always apply thread lubricant (anti-seize) to male threads before assembling waterblast connections. See page E-1 for thread lubricants available from Jetstream.

MEDIUM PRESSURE (MP)

3-Piece Male Connection (Standard)

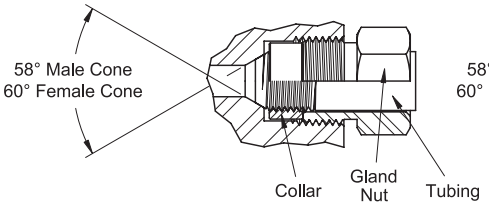

Single-Piece Male Connection

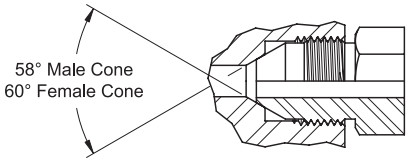

- Industry standard connection for 20,000 psi (1379 bar) applications, medium pressure is occasionally used in applications at 15,000 psi (1034 bar) and below.
- Connections exist in two different forms:
  1. Used to connect medium pressure tubing with a conical male seat and left-handed threads to a female port using a gland nut and left-hand threaded collar (Gland, Collar & Tubing).
  2. For many medium pressure male fittings, the geometry of the gland, collar, and tubing is combined into one component that connects directly to a medium pressure female port (Single Piece Style).
- With proper care, this connection is suitable for repetitive connection/disconnection.
- Damage from repeated or improper use can often be repaired using reconing tools. For details on tubing preparation and repair equipment, contact Jetstream Sales.

SIZE	CONNECTION THREAD	TUBING THREAD* LEFT-HAND	RECOMMENDED TORQUE	
			FT-LB	N-M
1/4" MP	7/16"-20UNF	1/4"-28UNF	20	27
3/8" MP	9/16"-18UNF	3/8"-24UNF	30	41
9/16" MP	13/16"-16UNF	9/16"-18UNF	50	68
3/4" MP	3/4"-14NPSM	3/4"-16UNF	90	122
1" MP	1-3/8"-12UNF	1"-14UNF	125	170

* For three-piece connection styles only

CONNECTION INSTRUCTIONS

1. **3-piece Male Connection Style only** — Liberally apply anti-seize to male tubing threads to prevent thread galling.
2. **3-piece Male Connection Style only** — Slide gland nut over tubing and thread collar (left-hand threaded) onto tubing until it is past the first one or two full threads of the tubing.
3. **Both Styles** — Liberally apply anti-seize to male connection threads and male cone.
4. **Both Styles** — Install male connection into female port and tighten according to torque specification in chart above.

Note: Always apply thread lubricant (anti-seize) to male threads before assembling waterblast connections. See page E-1 for thread lubricants available from Jetstream.

Actual Size
Reference Chart

Single Piece Style

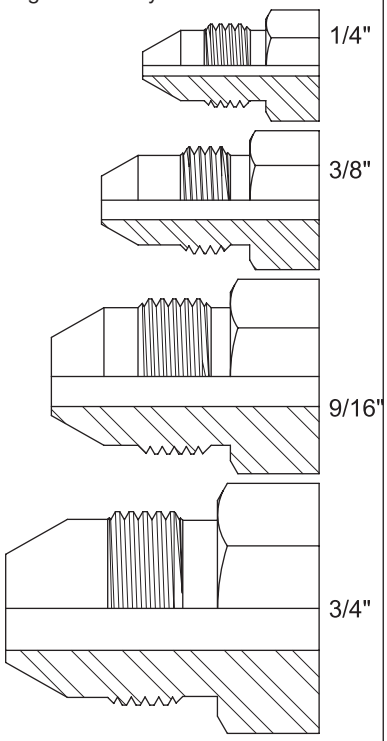

Gland, Collar & Tubing

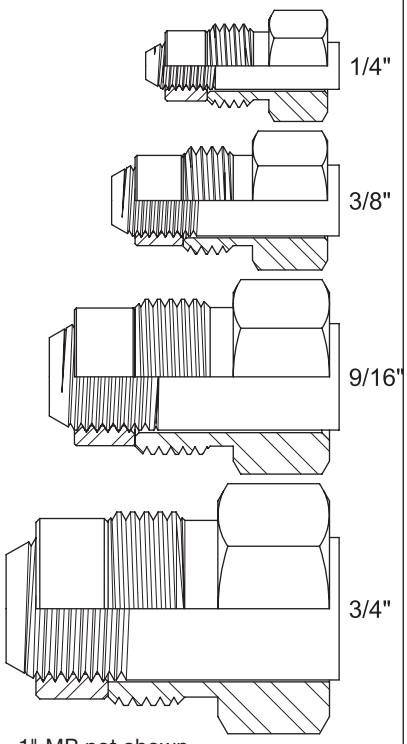

1" MP not shown

TECHNICAL

PART NUMBERS

00111 ..... E-11
01437 ..... E-10
04101 ..... B-6, B-10
04210 ..... F-5
25059 ..... B-25, B-35, B-37, B-41
25060 ..... B-25, B-35, B-37, B-41
25117 ..... C-27
25120 ..... E-8
25132 ..... B-13
25174 ..... C-25
25193 ..... F-3, F-4, F-5, F-6, F-10
25206 ..... C-7, C-10, C-13
25212 ..... E-3
25215 ..... E-8
25220 ..... B-57, B-59
25228 ..... G-71
25229 ..... G-24
25238 ..... E-15
25247 ..... C-23
25249 ..... H-7
25251 ..... B-13, H-7
25255 ..... B-25, B-35, B-37, B-41, B-51
25261 ..... F-11, F-12
25279 ..... C-22
25296 ..... F-3, F-4, G-30, F-8
25314 ..... C-23
25392 ..... E-8, G-43, G-45, G-46
25395 ..... E-8, G-44, G-71
25427 ..... B-75
25428 ..... B-13
25452 ..... E-7
25454 ..... E-7
25455 ..... E-7
25501 ..... G-61
25508 ..... B-13
25513 ..... D-2, D-3, D-17
25513-0060505 ..... H-3
25513-0250505 ..... D-2
25513-0500505 ..... D-2
25536 ..... B-13
25541 ..... B-13
25566 ..... B-17, B-19, B-53
25568 ..... D-9, D-10, D-20
25568-25 ..... D-9
25568-50 ..... D-9
25570 ..... D-9, D-10, D-20
25570-25 ..... D-9
25570-50 ..... D-9
25571 ..... D-9, D-10, D-20
25571-25 ..... D-9
25571-50 ..... D-9
25576 ..... D-2, D-3, D-18
25576-0060404 ..... H-3
25576-0250404 ..... D-2
25576-0500404 ..... D-2
25593 ..... C-17, C-19, C-24, C-25
25603 ..... C-17, C-24, C-25
25607 ..... B-35, B-37, B-39, B-41, B-49, B-51
25614 ..... H-19
25617 ..... H-19
25620 ..... H-18
25621 ..... H-18
25624 ..... H-19
25625 ..... H-19
25644 ..... C-9, C-15
25657 ..... C-19
25690 ..... E-3
25700 ..... C-17, C-19, C-24, C-25
25702 ..... E-9
25703 ..... E-9
25706 ..... B-33, B-63
25749 ..... G-61
25771 ..... C-19, C-28
25782 ..... G-30, G-31
25796 ..... C-7, C-19
25807 ..... C-19
25864 ..... B-47
25866 ..... C-27
25901 ..... E-6
25902 ..... E-6
25903 ..... E-6
25904 ..... E-6, G-46
25914 ..... D-2, D-3, D-18
25914-0250303 ..... D-2
25914-0500303 ..... D-2
25928 ..... B-6, B-10, B-13
25932 ..... C-19
25946 ..... B-6, B-10, B-13, B-23, B-25, B-27, B-33, B-35, B-37, B-39, B-41, B-43, B-47, B-49, B-51, B-53, B-57, B-59, B-63, B-67, B-69, B-71, B-75
26051 ..... B-6, B-10
26055 ..... E-5
26056 ..... E-5
26057 ..... E-5
26059 ..... E-5
26061 ..... E-5, F-3, F-4, F-5, F-6, F-8, F-9, F-10
26062 ..... E-6, F-5, F-6, F-9, F-10
26063 ..... E-6
26064 ..... E-5
26065 ..... C-19
26067 ..... E-5
26069 ..... G-45, C-22
26072 ..... E-5
26073 ..... E-6
26074 ..... E-6
26075 ..... E-7
26077 ..... E-8
26084 ..... E-7
26104 ..... D-5, D-6, D-7, D-8, D-19, H-6
26104-0250101 ..... D-5
26104-0350101 ..... D-5
26104-0500101 ..... D-5
26106 ..... D-5, D-6, D-7, D-8, D-19, H-6
26106-0250202 ..... D-5
26106-0350202 ..... D-5
26106-0500202 ..... D-5
26108 ..... D-1, D-5, D-6, D-7, D-8, D-19, H-6
26108-0250303 ..... D-5
26108-0350303 ..... D-5
26108-0500303 ..... D-5
26115 ..... B-19, C-17, C-19
26124 ..... E-6
26126 ..... C-7, C-9, C-10, C-11, C-13, C-15
26146 ..... E-8
26147 ..... E-8
26148 ..... B-17, E-8
26149 ..... E-8
26151 ..... E-7
26152 ..... E-7
26153 ..... E-7
26154 ..... E-7
26155 ..... E-7
26156 ..... E-7
26157 ..... E-6
26158 ..... E-6
26162 ..... E-4
26164 ..... C-24
26166 ..... E-4
26170 ..... E-8, G-43
26171 ..... E-4
26173 ..... E-4
26175 ..... E-3
26176 ..... E-3
26181 ..... E-3
26182 ..... E-3
26195 ..... B-6, B-10
26208 ..... B-6, B-10
26212 ..... B-39, B-41
26220 ..... B-35
26247 ..... H-19
26253 ..... H-19
26255 ..... H-18
26255T H-18
26255V H-18
26259 ..... B-6, B-10
26259-1 ..... B-6, B-10
26259-2 ..... B-6, B-10
26259-3 ..... B-6, B-10
26314 ..... E-5
26360 ..... B-6, B-10, B-13
26361 ..... B-6, B-10, C-21
26364 ..... C-7
26369 ..... B-6, B-10
26376 ..... B-6, B-10
26379 ..... B-6, B-10, B-17, B-19
26387 ..... B-21, B-23, B-25, B-35, B-37, B-39, B-41, B-49, B-51, B-53
26390 ..... B-6, B-10
26416 ..... B-27, B-47, B-57, B-59, B-63, B-67, B-69, B-71, B-75
26426 ..... C-22
26435 ..... B-6, B-10, B-13, C-21
26453 ..... F-11, F-12
26455 ..... C-26
26462 ..... B-13, B-27, B-33, B-47, B-57, B-59, B-63, B-67, B-69, B-71, B-75, C-4
26465 ..... B-17, B-33, B-35, B-37, B-39, B-41, B-43, B-47, B-49, B-51, B-53, B-63,

B-67, B-69, B-71, B-75
26468 ..... B-6, B-10, B-13, B-21, B-23, B-25, B-27, B-33, B-35, B-37, B-39, B-41, B-43, B-47, B-49, B-51, B-53, B-57, B-59, B-63, B-67, B-69, B-71, B-75, C-23
26469 ..... B-39, B-41, B-43, B-53, B-59, B-75
26470 ..... B-27, B-33, B-47, B-57, B-59, B-63, B-67, B-69, B-71, B-75
26472 ..... B-27, B-33, B-47, B-57, B-59, B-63, B-67, B-69, B-71, B-75
26473 ..... B-33, B-63
26474 ..... B-27, B-33, B-57, B-59, B-63, B-67, B-69, B-71, B-75
26476 ..... B-27, B-33, B-47, B-57, B-59, B-63, B-67, B-69, B-71, B-75
26478 ..... B-13
26479 ..... B-6, B-10
26481 ..... B-6, B-10
26482 ..... B-6, B-10
26483 ..... B-13
26484 ..... B-6, B-10, B-13
26486 ..... B-13
26487 ..... B-6, B-10, B-23, B-25, B-35, B-37, B-39, B-41, B-49, B-51, B-53
26491 ..... B-6, B-10
26492 ..... B-13
26494 ..... B-37
26495-1 ..... B-13
26495-2 ..... B-13
26495-3 ..... B-13
26496 ..... B-13
26500 ..... B-6, B-10, B-21, B-23, B-25, B-49, B-51, C-4
26509 ..... C-24, C-25
26522 ..... C-17
26523 ..... E-16
26534 ..... G-71
26543 ..... B-57, B-59
26544 ..... B-57, B-59, B-67, B-69, B-71, C-4
26556 ..... C-20, C-21
26558 ..... B-6, B-10, B-13
26562 ..... H-7
26571 ..... C-21
26589 ..... B-17, B-19
26590 ..... B-6, B-10
26623 ..... B-13, B-27, B-57, B-59
26635 ..... E-20, E-21
26645 ..... E-20
26657 ..... E-3
26669 ..... B-49, B-51
26682 ..... C-23
26688 ..... C-23
26689 ..... B-21, C-10, C-11, F-4, F-5, F-6, F-8, F-9, F-10, C-23
26690 ..... C-23
26705 ..... B-6, B-10, B-13
26711 ..... C-9, C-15
26717 ..... H-20
26728 ..... C-23
26732 ..... B-43
26733 ..... B-43
26734 ..... B-43
26735 ..... B-43
26737 ..... B-43
26759 ..... G-16, G-20
26762 ..... G-2
26765 ..... C-27
26766 ..... C-27
26782 ..... C-17, C-24, C-25
26798 ..... B-6, B-10, B-13
26802 ..... B-35, B-37, B-39, B-41, B-49, B-51
26834 ..... H-7
26836 ..... B-43
26869 ..... G-16
26871 ..... G-2, G-20, G-31
26874 ..... B-27, B-39, B-41, B-43, B-53, B-59, B-75
26876 ..... B-21
26894 ..... H-19
26916 ..... C-27
26919 ..... C-19
26920 ..... G-71
26921 ..... G-13
26930 ..... B-21, B-23, B-39, B-49
26993 ..... C-5
27009 ..... E-18
27030 ..... G-71
27038 ..... G-24
27040 ..... G-24
27042 ..... G-24
27043 ..... G-24
27044 ..... G-24
27046 ..... G-24
27048 ..... G-24
27049 ..... G-24
27072 ..... G-16
27101 ..... B-6, B-10, B-13, B-23, B-25, B-27, B-33, B-35, B-37, B-39, B-41, B-43, B-47, B-49, B-51, B-53, B-57, B-59, B-63, B-67, B-69, B-71, B-75
27107 ..... C-7, C-13
27118 ..... B-21, B-23, B-39, B-49, B-51, B-53
27119 ..... B-21, B-23, B-39, B-49, B-51, B-53
27126 ..... H-7
27168 ..... H-19
27181 ..... E-5
27204 ..... G-24
27251 ..... C-7, C-13
27301 ..... G-72
27347 ..... C-9, C-15
27348 ..... C-9, C-15
27349 ..... C-9
27350 ..... C-17
27380 ..... C-9, C-15
27449 ..... H-7
27475 ..... B-17, B-33, B-35, B-37, B-39, B-41, B-43, B-47, B-49, B-51, B-53, B-57, B-59, B-63, B-67, B-69, B-71, B-75
27492 ..... G-28, G-31
27495 ..... C-21
27497 ..... C-27
27527 ..... E-13
27550 ..... B-53
27551 ..... B-53
27560 ..... D-5, D-6, D-7, D-8, D-19, H-6
27560-0250404 ..... D-5
27560-0350404 ..... D-5
27560-0500404 ..... D-5
27592 ..... B-6, B-10
27631 ..... , C-9
27680 ..... C-22
27688 ..... C-27
27716 ..... C-22
27721 ..... E-1, E-2
27722 ..... G-21, H-9
27729 ..... B-43, B-53
27732 ..... B-17, B-19, B-21, B-23, B-25, B-33, B-35, B-37, B-47, B-49, B-51, B-57, B-63, B-67, B-69, B-71
27740 ..... B-17, B-19, B-21, B-23, B-25, B-27, B-33, B-35, B-37, B-47, B-49, B-51, B-57, B-63, B-67, B-69, B-71, C-9, C-15
27757 ..... C-7, C-10
27779 ..... B-17, B-19
27783 ..... C-9
27884 ..... H-18
27885C H-18
27947 ..... C-19
27960 ..... E-20
27964 ..... E-18
27966 ..... E-18
27968 ..... E-20
27969 ..... E-17
27971 ..... E-10
27973 ..... E-20
27989 ..... C-19
27997 ..... E-18
28003 ..... E-11
28056 ..... C-21
28062 ..... B-6, B-10, B-13
28092 ..... E-11
28180 ..... E-20, E-21
28181 ..... E-20
28184 ..... E-18
28185 ..... E-18
28186 ..... E-19
28187 ..... E-18
28188 ..... E-18
28189 ..... E-18
28190 ..... E-19
28191 ..... E-19
28192 ..... E-14
28193 ..... E-14
28196 ..... E-13
28197 ..... E-1

28223 ..... C-9, C-15
28229 ..... E-20
28261..... E-10
28268 ..... E-21
28274..... C-23
28299 ..... E-14
28301 ..... E-17
28314..... E-21
28315..... E-21
28319..... E-5
28328..... E-14
28330 ..... E-14
28334 ..... E-11
28335 ..... E-10, G-26
28341..... E-18
28349 ..... E-21
28350 ..... E-14
28364 ..... C-9, C-15
28367 ..... C-9, C-15
28382 ..... E-18
28383 ..... E-20, G-21, H-8
28384 ..... E-20, E-21, G-21, H-8
28386 ..... E-11, G-2
28433 ..... G-26, E-14
28462 ..... E-19
28480MOD..... C-27
28481..... D-6, D-7, D-8, D-18
28487 ..... E-13
28490 ..... D-4, D-6, D-7, D-8, D-19
28490-0250303 ..... D-4
28490-0500303 ..... D-4
28501..... H-19
28519..... C-27
28523..... E-11
28524..... D-4, D-6, D-7, D-8, D-18
28524-0250505..... D-4
28524-0251212..... D-4
28524-0500505..... D-4
28524-0501212 ..... D-4
28577..... E-3
28589 ..... H-18
28596 ..... D-6, D-7, D-8, D-20, H-6
28602 ..... E-8
28610..... E-10
28611 ..... E-6
28616..... B-69
28629 ..... E-14
28631..... E-14
28634 ..... H-20
28666 ..... E-21
28667 ..... E-21
28668 ..... E-21
28673..... D-4, D-5, D-6, D-7, D-8, D-19
28673-0250404..... D-4, D-5
28673-0350404..... D-5
28673-0500404..... D-4, D-5
28700..... E-21
28702..... E-10
28726..... E-19
28731..... E-20
28732..... E-20, E-21
28779..... B-47
28786..... E-14
28797..... E-19
28804 ..... E-14
28806 ..... C-27
28822 ..... E-6
28826 ..... B-6
28844 ..... E-3
28844F E-3
28844M E-3
28844S E-3
28852 ..... B-19, E-10
28860 ..... H-3
28875..... E-8
28875-04..... G-45
28894 ..... E-5
28903 ..... E-11, G-21, H-9
28921..... E-3
28921F..... E-3
28921M..... E-3
28921S E-3
29000 ..... E-10
29010..... E-11
29013..... E-20
29019..... E-13
29054 ..... E-6
29055 ..... E-7
29058 ..... E-13
29059 ..... E-13
29060 ..... E-13
29061 ..... E-13
29062 ..... E-13
29063 ..... E-14
29064 ..... E-14
29065 ..... E-14
29066 ..... E-14
29067 ..... E-17
29068 ..... E-17
29069 ..... E-17
29070..... E-18
29071..... E-18
29072 ..... E-18
29073 ..... E-18
29074..... E-18
29075..... E-18
29076..... E-18
29077 ..... E-18
29078..... E-18
29079 ..... E-18
29080 ..... E-18
29081 ..... E-19
29082 ..... E-19
29083 ..... E-19
29084 ..... E-19
29085 ..... E-19
29086 ..... E-19
29087 ..... E-19
29088 ..... E-19
29089 ..... E-19
29090 ..... E-19
29091 ..... E-19
29092 ..... E-19
29093 ..... E-19
29094 ..... E-19
29095 ..... E-19
29096 ..... E-19
29097 ..... E-19
29098 ..... E-20
29099 ..... E-20, E-21
29100..... E-20
29101..... E-20
29102..... E-20
29103..... E-21
29104..... E-21
29105..... E-21
29106..... E-21
29108..... E-20
29108-08..... G-21, H-8
29109..... E-20
29110..... E-20
29111 ..... E-21
29112 ..... E-21
29113 ..... E-21
29114 ..... E-21
29115 ..... E-21
29119 ..... E-19
29155..... C-9
29158..... C-9, C-15
29178..... E-10
29182..... E-11
29183..... E-10
29184..... E-11
29185..... E-10
29186..... E-11
29253 ..... E-10
29263 ..... H-20
29279..... E-11
29313..... D-4, D-6, D-7, D-8, D-18
29313-0250606..... D-4
29313-0251313..... D-4
29313-0500606..... D-4
29313-0501313 ..... D-4
29316..... E-10
29319S E-5
29327 ..... E-10
29342 ..... E-10
29369 ..... C-21
29392 ..... E-11
29427..... B-21
29461 ..... B-17, B-19
29485 ..... E-5
29485S..... E-5
29486 ..... E-5
29486S..... E-5
29495 ..... B-13
29532 ..... E-3
29534 ..... E-11, G-16
29623 ..... B-21
29630 ..... B-21
29669 ..... E-10
29673 ..... E-11
29678 ..... E-9
29715..... E-19
29738..... B-6, B-10, B-13
29748..... B-67, B-71
29799..... C-9, C-15
29818..... C-28
29828 ..... E-6
29889 ..... B-21
29891 ..... B-21
29904 ..... C-21
29956 ..... H-20

40282 ..... E-1
50034 ..... B-27, B-33, B-47, B-57, B-59, B-63, B-67, B-69, B-71, B-75
50059 ..... E-5
50064 ..... B-27, B-33, B-47, B-57, B-59, B-63, B-67, B-69, B-71, B-75, C-4
50109 ..... H-3
50115 ..... B-37
50124 ..... F-3, F-4, F-5, F-6, F-8, F-9
50127 ..... F-3, F-4, F-6, F-8, F-9
50135 ..... H-4
50138 ..... H-4
50234 ..... C-16, C-17, C-24, C-25
50288-03 ..... H-3
50288-06 ..... H-3
50288-10 ..... H-3
50290 ..... H-3
50293 ..... B-49, B-51
50295 ..... B-6, B-10, B-21, B-23, B-25, B-35, B-37, B-39, B-41, B-49, B-51, B-53
50296 ..... E-4
50297 ..... B-25, B-35, B-37, B-51
50298 ..... E-4
50299 ..... B-25, B-35, B-37, B-51
50300 ..... C-25
50302 ..... E-4
50303 ..... B-25, B-35, B-37, B-41, B-51
50336 ..... E-4
50342 ..... E-5, F-5, F-6
50354 ..... E-4
50365 ..... B-25, B-35, B-37, B-41
50370 ..... B-25, B-35, B-37, B-41
50378 ..... B-43
50385 ..... E-4
50392 ..... E-5
50460 ..... , C-7
50468 ..... G-69
50488 ..... B-17, B-19, C-25
50496 ..... C-25
50511 ..... F-10
50512 ..... G-43
50518 ..... G-61
50541 ..... G-61
50554 ..... G-59
50557 ..... E-3
50559 ..... D-9, D-10, D-20
50559-25 ..... D-9
50559-50 ..... D-9
50562 ..... C-19
50585 ..... E-9
50592 ..... D-13, D-23
50594 ..... D-13, D-22
50596 ..... D-13, D-22
50620 ..... G-59
50624 ..... G-59
50638 ..... E-5
50639 ..... G-59
50640 ..... G-59
50658 ..... B-23, B-25, B-35, B-37, B-39, B-41, B-49, B-51, B-53
50659 ..... B-23, B-25, B-35, B-37, B-39, B-41, B-49, B-51, B-53
50660 ..... B-21, B-23, B-25, B-35, B-37, B-39, B-41, B-49, B-51, B-53
50661 ..... B-23, B-25, B-35, B-37, B-39, B-41, B-49, B-51, B-53
50662 ..... B-21, B-23, B-25, B-39, B-41, B-49, B-51, B-53
50673 ..... D-9, D-10, D-20
50673-25 ..... D-9
50673-50 ..... D-9
50752 ..... D-9, D-10, D-20
50752-25 ..... D-9
50752-50 ..... D-9
50795 ..... C-17, C-19, C-24, C-25
50796-03 ..... H-3
50796-06 ..... H-3
50807 ..... B-13
50811 ..... C-24, C-25
50816 ..... E-5
50824 ..... E-4
50851 ..... G-59
50852 ..... E-5
50887 ..... B-75
50889 ..... B-17, B-19, B-21, B-23, B-25, B-35, B-37, B-39, B-41, B-43, B-49, B-51, B-53, C-4
50896 ..... B-23, B-25, B-49, B-51
50897 ..... B-75
50900 ..... C-24
50902 ..... C-6, F-2, F-3, F-4, F-5, F-6, C-7, F-10, F-11
50906 ..... E-3
50933 ..... E-5
50989 ..... E-3
50989S E-3
50990 ..... E-3
50999 ..... E-9
51001 ..... E-4
51015 ..... D-12, D-21
51015-XX D-12
51016 ..... B-59, B-75
51020 ..... D-12, D-21
51020-XX D-12
51024 ..... H-6
51033 ..... C-29
51035 ..... B-17, C-29
51036 ..... H-6
51037 ..... C-29
51038 ..... H-6
51039 ..... E-9
51040 ..... C-29
51041 ..... E-9
51043 ..... E-9
51044 ..... H-6
51047 ..... C-29
51048 ..... C-29
51049 ..... C-29
51050 ..... C-29
51051 ..... C-29
51052 ..... B-17, C-29
51053 ..... B-17
51055 ..... H-6
51059 ..... D-14, D-23
51060 ..... G-69
51061 ..... D-14, D-23
51062 ..... D-14, D-23
51066 ..... D-13, D-23
51067 ..... D-13, D-22
51068 ..... D-13
51069 ..... D-13, D-22
51081 ..... D-13, D-23
51082 ..... D-13, D-22
51094 ..... G-45
51096 ..... G-46
51098 ..... E-8, F-6
51098-36 ..... F-6
51098-48 ..... F-5, F-10
51106 ..... E-8
51113 ..... G-69
51114 ..... G-68
51115 ..... G-68
51116 ..... G-68
51117 ..... G-68
51118 ..... D-2, D-3, D-17
51118-0250606 ..... D-2
51118-0500606 ..... D-2
51119 ..... G-64
51121 ..... G-64
51123 ..... G-64
51125 ..... G-64
51126 ..... B-17, B-19, C-17, C-19, C-25, C-28
51156 ..... G-45
51162 ..... D-9, D-10, D-20
51162-25 ..... D-9
51162-50 ..... D-9
51169 ..... G-46
51191 ..... E-5
51279 ..... B-6, B-10
51285 ..... B-29, B-48
51287 ..... B-37
51288 ..... B-37
51334 ..... E-2
51397 ..... E-8
51401 ..... E-9
51402 ..... E-2
51405 ..... E-2
51408 ..... E-2
51416 ..... H-15
51421 ..... B-10
51425 ..... H-6
51427 ..... H-6
51441 ..... C-30
51452 ..... C-30
51460A C-30
51460B C-30
51468 ..... C-30
51470A C-30
51470B C-30
51470C C-30
51477 ..... C-30
51486 ..... C-30
51487 ..... B-6, B-10
51490 ..... B-75
51498 ..... D-9, D-11, D-20
51498-25 ..... D-9
51498-50 ..... D-9

51500 ..... C-30
51534 ..... B-6, B-10
51536 ..... B-6, B-10
51538 ..... B-6, B-10
51550 ..... E-2
51552 ..... E-2
51554 ..... E-2
51556 ..... B-37
51611 ..... B-27, B-33, B-47, B-63, B-75
51617 ..... B-27, B-33, B-47, B-63, B-75
51619 ..... B-27, B-33, B-47, B-63, B-75
51621 ..... B-27, B-33, B-47, B-63, B-75
51623 ..... B-27, B-33, B-47, B-63, B-75
51624 ..... E-2
51628 ..... E-2
51638 ..... C-10, C-7
51645 ..... C-26
51647 ..... B-23, B-25, B-35, B-37, B-39, B-41, B-49, B-51, B-53
51651 ..... B-23, B-25, B-35, B-37, B-39, B-41, B-49, B-51, B-53
51656 ..... B-63
51659 ..... B-6, B-10, B-13, B-17, B-19, B-21, B-23, B-25, B-27, B-33, B-35, B-37, B-39, B-41, B-43, B-47, B-49, B-51, B-53, B-57, B-59, B-63, B-67, B-69, B-71, B-75
51664 ..... B-27, B-33, B-47, B-57, B-59, B-63, B-67, B-69, B-71, B-75
51665 ..... E-2
51666 ..... B-13, B-27, B-33, B-47, B-57, B-63, B-67, B-69, B-71
51667 ..... B-33, B-47, B-63, B-75
51670 ..... E-2
51671 ..... B-27, B-33, B-47, B-63, B-75
51672 ..... B-27, B-33, B-47, B-63
51673 ..... B-33
51674 ..... B-27, B-33, B-47, B-57, B-59, B-63, B-67, B-71, B-75
51675 ..... B-27, B-33, B-47, B-57, B-59, B-63, B-67, B-69, B-71, B-75
51689 ..... B-27, B-33, B-47, B-57, B-59, B-63, B-75
51690 ..... B-33, B-47, B-63, B-75
51691 ..... B-27, B-33, B-47, B-57, B-59, B-63, B-67, B-69, B-71, B-75
51692 ..... B-47
51694 ..... B-33, B-47, B-63, B-75
51695 ..... B-33, B-47, B-63, B-67, B-69, B-71
51696 ..... B-33, B-47, B-63, B-75
51697 ..... B-27, B-33, B-47, B-57, B-59, B-63, B-67, B-71, B-75
51700 ..... B-28, B-32
51702 ..... C-19
51705 ..... B-28, B-32
51707 ..... B-21, B-23, B-25, B-35, B-37, B-39, B-41, B-49, B-51, B-53
51710 ..... B-28, B-32
51712 ..... B-13
51713 ..... B-6, B-10
51714 ..... B-39, B-41
51715 ..... B-28, B-32
51716 ..... B-41
51717 ..... B-41
51718 ..... B-39, B-41
51719 ..... B-39, B-41
51720 ..... B-28, B-46
51721 ..... B-23, B-25, B-35, B-37, B-39, B-41, B-49, B-51, B-53
51721C B-23
51722 ..... B-23, B-25, B-35, B-37, B-39, B-41, B-49, B-51, B-53
51722C B-23
51723 ..... B-23, B-25, B-35, B-37, B-39, B-41, B-49, B-51, B-53
51723C B-23
51724 ..... B-23, B-25, B-35, B-37, B-39, B-41, B-49, B-51, B-53
51724C B-23
51725 ..... B-28, B-46
51726 ..... B-23, B-25, B-39, B-41, B-49, B-51, B-53
51726C B-23
51730 ..... B-28, B-46
51731 ..... B-6, B-10
51732 ..... B-13
51733 ..... B-13
51735 ..... B-28, B-46
51736 ..... B-6, B-10, B-23, B-25, B-35, B-37, B-39, B-41, B-49, B-51, B-53
51737 ..... B-13, B-27, B-57, B-59
51738 ..... B-13
51740 ..... B-29, B-62
51741 ..... B-27, B-57, B-59
51741C B-27
51742 ..... B-27, B-57, B-59
51742C B-27
51743 ..... B-27, B-57, B-59
51744 ..... B-23, B-25, B-35, B-37, B-39, B-41, B-49, B-51, B-53
51745 ..... B-29, B-62
51746 ..... B-21, B-23, B-25, B-39, B-41, B-49, B-51, B-53
51748 ..... B-13
51749 ..... B-13
51750 ..... B-29, B-62
51755 ..... B-29, B-62
51760 ..... B-11
51765 ..... B-11
51766 ..... B-49, B-51, B-53
51767 ..... C-24, C-25
51769 ..... C-24, C-25
51770 ..... B-11
51775 ..... B-11
51779 ..... H-6
51785 ..... C-24
51788 ..... B-57, B-59
51789 ..... B-57, B-59
51791 ..... B-57, B-59
51792 ..... B-59
51793 ..... B-59
51795 ..... B-59
51796 ..... B-57, B-59
51797 ..... B-57, B-59
51798 ..... B-57, B-59
51799 ..... B-57, B-59
51800 ..... B-29, B-48
51802 ..... B-23, B-25, B-35, B-37
51805 ..... B-29, B-48
51808 ..... B-23, B-25, B-35, B-37
51809 ..... B-23, B-25, B-35, B-37
51810 ..... B-29, B-48
51815 ..... B-29, B-48
51820 ..... B-29, B-74
51822 ..... C-30
51825 ..... B-29, B-74
51830 ..... B-29, B-74
51831 ..... B-27, B-57, B-59
51835 ..... B-29, B-74
51840 ..... B-28, B-38
51845 ..... B-28, B-38
51850 ..... B-28, B-38
51855 ..... B-28, B-38
51860 ..... B-28, B-38
51865 ..... B-28, B-36
51870 ..... B-28, B-36
51875 ..... B-28, B-36
51877 ..... C-23
51879 ..... C-23
51880 ..... B-28, B-36
51885 ..... C-23
51887 ..... C-23
51888 ..... C-23
51899 ..... C-22, C-23
51900 ..... C-23
51900A C-23
51903 ..... C-23
51903A C-23
51908 ..... C-23
51915 ..... B-29, B-58
51920 ..... B-29, B-58
51925 ..... B-29, B-58
51930 ..... B-29, B-58
51945A C-30
51945B C-30
51945C C-30
51950 ..... B-28, B-36
51955 ..... B-35, B-37, B-39, B-41, B-49, B-51
51970 ..... B-27
51973 ..... F-4
51975 ..... B-23, B-25
52055 ..... B-26
52060 ..... B-26

52065 ..... B-26
52070 ..... B-26
52077 ..... B-13
52092 ..... B-43
52097 ..... B-43
52098 ..... B-43
52099 ..... B-43
52102 ..... B-43
52104 ..... B-43
52111 ..... B-43
52112 ..... B-43
52114 ..... B-21, B-43
52117 ..... B-43
52118 ..... B-43
52121 ..... B-43
52122 ..... B-43
52130 ..... B-4
52134 ..... G-64
52135 ..... B-4
52138 ..... G-70
52144 ..... C-17, C-25
52151 ..... G-70
52170 ..... B-28, B-42
52178 ..... D-2, D-3, D-18
52178-0060404 ..... H-3
52178-0250404 ..... D-2
52178-0500404 ..... D-2
52180 ..... B-43
52185 ..... B-28
52194 ..... B-35
52196 ..... B-35
52197 ..... B-35
52198 ..... F-4, F-5, F-9, F-10
52201 ..... C-17, C-24, C-25
52225 ..... B-28, B-34
52229 ..... B-27
52230 ..... B-28, B-34
52231 ..... B-27, B-33, B-47, B-63, B-75
52232 ..... B-27, B-33, B-47, B-63, B-75
52233 ..... B-27, B-33, B-47, B-63, B-67, B-71, B-75
52235 ..... B-28, B-34
52240 ..... B-28, B-34
52241 ..... D-2, D-3, D-17
52241-0060505 ..... H-3
52241-0100505 ..... H-3
52241-0250505 ..... D-2
52241-0500505 ..... D-2
52245 ..... B-28, B-34
52265 ..... B-28, B-46
52270 ..... B-26
52275 ..... B-11
52280 ..... B-29, B-62
52285 ..... B-29, B-74
52290 ..... B-28, B-32
52305 ..... G-2
52320-05 ..... G-20
52320-10 ..... G-20
52320-15 ..... G-20
52386 ..... G-16, G-20
52486 ..... C-17, C-19
52494 ..... B-21
52543 ..... F-8, F-9, C-13
52550 ..... B-8
52555 ..... B-8
52560 ..... B-8
52565 ..... B-8
52570 ..... B-8
52572 ..... C-19
52575 ..... B-8
52583 ..... C-19
52645 ..... F-8
52657 ..... E-2
52662 ..... E-2
52663 ..... E-2
52667 ..... E-2
52672 ..... E-4
52673 ..... E-4
52674 ..... E-7
52676 ..... E-5
52680 ..... C-16
52684 ..... E-3
52690 ..... C-18, C-19
52695 ..... C-18, C-19
52700 ..... C-19
52701 ..... B-57
52702 ..... B-57
52706 ..... G-71
52708 ..... G-71
52709 ..... G-71
52711 ..... G-71
52750 ..... C-10, C-7
52753 ..... G-24
52755 ..... B-29, B-56
52756 ..... C-9, C-15, G-24
52757 ..... G-24
52760 ..... B-29, B-56
52762 ..... G-24
52764 ..... G-24
52765 ..... B-29, B-56
52770 ..... B-29, B-56
52785 ..... B-57
52803 ..... G-16
52810 ..... G-71
52815 ..... G-71
52819 ..... G-24
52820 ..... G-23
52840 ..... C-25
52864 ..... B-23, B-25, B-49, B-51
52866 ..... B-39, B-41
52869 ..... B-39
52870 ..... B-21, B-23, B-39, B-49, B-51, B-53
52871 ..... B-39
52872 ..... B-23, B-49, B-53
52873 ..... B-23, B-49, B-53
52875 ..... B-21, B-23, B-39, B-49, B-51, B-53
52878 ..... B-21, B-23, B-39, B-49, B-53
52879 ..... B-21, B-23, B-39, B-49, B-53
52894 ..... C-23
52958 ..... G-24
52963 ..... G-23
52965 ..... G-24
52983 ..... B-33, B-47, B-63, B-75
53054 ..... E-7
53085 ..... B-22
53090 ..... B-22
53095 ..... B-22
53100 ..... B-22
53105 ..... B-22
53106 ..... G-71, G-72
53107 ..... G-71, G-72
53110 ..... B-22
53135 ..... C-18, C-19
53165 ..... C-8
53175 ..... F-3, F-4, F-5, F-6, F-10
53203 ..... C-9, C-15
53225 ..... F-3
53235 ..... D-2, D-3, D-16
53235-0250707 ..... D-2
53235-0500707 ..... D-2
53240 ..... F-3
53242 ..... B-27, B-33, B-35, B-37, B-39, B-41, B-43, B-47, B-49, B-51, B-57, B-63, B-67, B-69, B-71
53270 ..... F-3
53300 ..... F-3
53303 ..... F-3, F-4, F-8
53304 ..... F-3, F-4, F-8
53313 ..... B-23, B-49
53314 ..... B-23, B-39, B-49
53316 ..... B-21, B-23, B-39, B-49
53321 ..... B-21, B-23, B-39, B-49
53330 ..... B-22
53340 ..... F-4
53345 ..... F-4
53368 ..... C-7
53371 ..... C-23
53373 ..... F-11, F-12
53374 ..... C-13
53384 ..... C-7
53384P C-13
53395 ..... G-24
53397 ..... G-24
53398 ..... G-24
53410 ..... G-24
53424 ..... C-7
53440 ..... C-6, C-9
53443 ..... C-22
53444 ..... C-22
53445 ..... C-6
53446 ..... C-22
53475 ..... F-10
53482 ..... G-60
53483 ..... G-60
53484 ..... G-60
53486 ..... G-60
53549 ..... C-10, C-7
53555 ..... B-29, B-52
53560 ..... B-29, B-52
53565 ..... B-29, B-52
53575 ..... B-29, B-52
53585 ..... B-29, B-52
53590 ..... B-53
53598 ..... B-53
53600 ..... B-10
53601 ..... B-53
53602 ..... B-53
53605 ..... C-18, C-19
53623 ..... E-6
53680 ..... C-13, C-15
53681 ..... B-13

53695 ..... C-8
53731 ..... D-13, D-22
53738 ..... C-29
53788 ..... C-7, C-10, C-11, C-13
53793 ..... B-53, B-59, B-75
53844 ..... G-3
53845 ..... C-6, C-10
53847 ..... G-60
53859 ..... C-17
53912 ..... C-17
53915 ..... C-11, C-7
53920 ..... B-17, B-19, C-16, C-25
53935 ..... , C-6, C-9
53954 ..... , C-11, C-7
53959 ..... , C-11, C-7
54060-06 ..... H-3
54060-10 ..... H-3
54077 ..... C-17, C-25
54153 ..... G-63
54154 ..... G-63
54156 ..... G-63
54157 ..... G-63
54158 ..... G-63
54165 ..... G-44
54166 ..... G-44
54168 ..... G-66
54169 ..... G-66
54171 ..... G-66
54172 ..... G-66
54173 ..... G-66
54178 ..... E-3
54180 ..... E-3
54180F E-3
54184 ..... G-43
54238 ..... C-18
54268 ..... C-23
54269 ..... C-23
54271 ..... C-23
54272 ..... C-23
54276 ..... G-2
54277 ..... G-2
54293 ..... C-23
54299 ..... D-13, D-21
54321 ..... C-7, C-10, C-11
54330 ..... F-7, F-8
54342 ..... C-7
54360 ..... F-3
54368 ..... E-3
54375 ..... F-3
54411 ..... D-14, D-23
54415 ..... F-3
54420 ..... F-3
54424 ..... B-67, B-69
54425 ..... F-3
54426 ..... B-67
54427 ..... B-69
54428 ..... B-67, B-69, B-71
54429 ..... B-69
54432 ..... C-18, C-19
54445 ..... F-7, F-8
54450 ..... F-8
54452 ..... G-16
54496 ..... B-67
54497 ..... B-67
54501 ..... B-67, B-71
54502 ..... B-67, B-71
54503 ..... B-67, B-71
54506 ..... B-67, B-71
54507 ..... B-67, B-71
54508 ..... B-67, B-71
54535 ..... G-16
54545 ..... B-29, B-66
54550 ..... B-29, B-66
54555 ..... B-29, B-66
54560 ..... B-29, B-66
54605 ..... F-3
54626 ..... B-21
54627 ..... B-21
54628 ..... B-21
54629 ..... B-21
54631 ..... B-21
54638 ..... B-21
54640 ..... H-3
54645 ..... H-3
54690 ..... B-21
54705 ..... F-4
54709 ..... G-70
54719 ..... E-10
54721 ..... E-6
54724 ..... C-8
54754 ..... E-3
54758 ..... E-3
54761 ..... E-3
54762 ..... E-3
54763 ..... E-3
54764 ..... E-3
54766 ..... E-3
54767 ..... E-3
54768 ..... E-3
54769 ..... E-20
54777 ..... C-8
54781 ..... E-20
54783 ..... E-20
54784 ..... E-20
54787 ..... E-20
54788 ..... E-20
54789 ..... E-3, E-20
54844 ..... E-16
54846 ..... E-16
54847 ..... E-16
54849 ..... B-21
54851 ..... B-21
54854 ..... E-16
54872 ..... B-20
54873 ..... B-20
54895 ..... B-43
54900 ..... F-4
54906 ..... B-20
54938 ..... E-17
54958 ..... E-11
54995 ..... C-6
55033 ..... E-10
55080 ..... B-4
55085 ..... B-4
55090 ..... B-4
55091 ..... E-12
55092 ..... E-12
55093 ..... E-12
55094 ..... E-12
55095 ..... B-4
55096 ..... E-12
55097 ..... E-12
55098 ..... E-12
55099 ..... E-12
55120 ..... C-6, C-10
55176 ..... C-28
55186 ..... B-30
55190 ..... B-30
55194 ..... B-30
55198 ..... B-30
55222 ..... E-13
55223 ..... E-13
55224 ..... E-12
55252 ..... B-13
55253 ..... B-6, B-10
55266 ..... B-67, B-69, B-71
55267 ..... B-71
55268 ..... B-71
55269 ..... B-71
55270 ..... B-29, B-70
55271 ..... B-71
55275 ..... B-29, B-70
55280 ..... B-29, B-70
55285 ..... B-29, B-70
55296 ..... E-16
55297 ..... C-25
55304 ..... C-25
55316 ..... C-29
55330 ..... C-25
55338 ..... B-30
55339 ..... B-30
55340 ..... B-30
55341 ..... B-30
55343 ..... B-30
55344 ..... B-30
55345 ..... B-30
55346 ..... B-30
55347 ..... B-30
55348 ..... B-30
55351 ..... B-30
55352 ..... B-30
55353 ..... B-30
55354 ..... B-30
55355 ..... B-30
55402 ..... C-28
55416 ..... C-28
55432 ..... F-11, F-12
55435 ..... F-11
55450 ..... E-8
55450-04 ..... G-46, F-10
55450-06 ..... F-10
55450-7 ..... G-21, H-9
55450-11 ..... F-6
55450-36 ..... F-6
55450-48 ..... F-5
55477 ..... B-23, B-25
55489 ..... B-67, B-71
55491 ..... B-67
55497 ..... F-6, F-10
56416 ..... B-33
56547 ..... E-3
56551 ..... C-22
56594 ..... E-4
56614 ..... E-3
56616 ..... E-3
56692 ..... D-13, D-21
56742 ..... C-4
56861 ..... E-16

56862 ..... E-16
56863 ..... E-16
56949 ..... B-6, B-10
56999 ..... C-7, C-13
57066 ..... F-10
57076 ..... F-10
57197 ..... C-16
57244 ..... B-5, B-9
57345 ..... B-30
57432 ..... C-11
57888 ..... C-27
57902 ..... C-22
57927 ..... G-30
57956 ..... F-10
57956-66 ..... F-3, F-4, F-5, F-6
57962 ..... C-18, C-19
57970 ..... C-22
57986-66 ..... F-8, F-9
57998 ..... H-19
58100 ..... H-3
58101 ..... H-3
58196 ..... C-10, C-11
58279 ..... B-21
58368 ..... C-27
58414 ..... C-27
58501-17-68 ..... B-12
58501-18-66 ..... B-12
58501-21-23 ..... B-12
58501-24-60 ..... B-12
58848 ..... C-7
58864 ..... C-9, C-15
58865 ..... C-9, C-15
58867 ..... C-9, C-15
58868 ..... C-9, C-15
58901 ..... H-12
58901-V H-12
58902 ..... H-12
58902-V H-12
58903 ..... H-15
58904 ..... H-14
58905 ..... H-14
58932 ..... H-15
58944 ..... H-13
58945 ..... H-13
58946 ..... H-13
58947 ..... H-13
58948 ..... H-13
58949 ..... H-13
58950 ..... H-13
58951 ..... H-13
58952 ..... H-13
58955 ..... H-15
58956 ..... H-12
58956-V H-12
58957 ..... H-12
58957-V H-12
58958 ..... H-12
58958-V H-12
58959-V H-12
58960-V H-12
58961-V H-12
58962 ..... H-12
58962-V H-12
58963 ..... H-12
58963-V H-12
58964 ..... H-12
58964-V H-12
58965 ..... H-12
58965-V H-12
58966 ..... H-13
58966-V H-13
58967 ..... H-13
58967-V H-13
58968 ..... H-13
58968-V H-13
58969-V H-13
58970-V H-13
58971-V H-13
58972 ..... H-13
58973 ..... H-13
58974 ..... H-13
58978 ..... H-14
58979 ..... H-14
58980 ..... H-14, G-20, G-20
58981 ..... G-20, H-14
58982 ..... H-14
58983 ..... H-14
58984 ..... H-14
58985 ..... H-14
58986 ..... H-14
58987 ..... H-14
58988 ..... H-14
58989 ..... H-14
58990 ..... H-14
58991 ..... H-14
58992 ..... H-14
58993 ..... H-14
58996 ..... H-15
58997 ..... H-15
58998 ..... H-14
58999 ..... H-14
59000 ..... H-15
59001 ..... H-15
59002 ..... H-15
59003 ..... H-15
59004 ..... H-15
59005 ..... H-15
59006 ..... H-15
59007 ..... H-15
59008 ..... H-4
59009 ..... H-4
59010 ..... H-4
59011 ..... H-4
59012 ..... H-4
59013 ..... H-4
59014 ..... H-4
59015 ..... H-15
59016 ..... H-15
59047 ..... C-24
59100-16-69 ..... B-5, B-9
59100-17-68 ..... B-5, B-9
59100-19-67 ..... B-5, B-9
59100-22-64 ..... B-5, B-9
59101 ..... B-5, B-9
59149 ..... C-20, C-21
59189 ..... E-12
59229 ..... H-7
59291 ..... H-5
59318 ..... B-21
59374 ..... F-11
59376 ..... F-11
59377 ..... F-12
59391 ..... H-3
59405 ..... B-28
59459 ..... C-8
59492 ..... H-13
59853 ..... H-13
59854 ..... H-13
59855 ..... H-13
59859 ..... H-12
59860 ..... H-12
59861 ..... H-12
59869 ..... H-13
59870 ..... H-13
59871 ..... H-13
59873 ..... H-12
59873-V H-12
59874 ..... H-12
59874-V H-12
59875 ..... H-12, H-13
59875-V H-12
59876 ..... H-12, H-13
59876-V H-12
59877 ..... H-13
59880 ..... F-9
59932 ..... G-47
59933 ..... G-47
59934 ..... G-47
60026 ..... C-10, C-11
60075 ..... C-10, C-11
60208-XX B-6
60248 ..... B-21
60265 ..... B-17
60396 ..... H-17
60419 ..... F-7, F-8, C-13
60451 ..... B-17, B-19
60600 ..... B-17, B-19
60602 ..... B-17, B-19
60603 ..... B-17, B-19
60607 ..... B-17, B-19
60611 ..... B-17, B-19
60650 ..... C-14
60740 ..... C-27
60758 ..... B-17, B-19
60815 ..... B-47
60821 ..... B-17, B-19
60897 ..... E-15
60903 ..... B-17
60951 ..... B-17, B-19, E-15
60952 ..... B-17, E-14
60953 ..... E-14
60954 ..... B-17, B-19, E-15
60955 ..... B-17, B-19, E-15
61075 ..... C-21
61124 ..... B-23
61141 ..... B-17, B-19
61142 ..... B-17, B-19
61143 ..... B-17, B-19
61145 ..... B-17
61255 ..... H-5
61264 ..... B-17, B-19
61271 ..... B-19
61272 ..... B-17, B-19
61283 ..... H-7
61284 ..... H-7
61288 ..... H-7
61322 ..... E-17
61415 ..... H-15

61447 ..... G-22
61448 ..... H-7
61449 ..... H-7
61450 ..... H-7
61461 ..... H-7
61503 ..... E-16
61539 ..... E-21
61540 ..... E-21
61541 ..... E-21
61542 ..... E-21
61543 ..... E-21
61607 ..... C-27
61626 ..... C-28
61721 ..... B-6, B-10
61823 ..... B-19, E-15
61880 ..... F-5, F-6
61916 ..... B-17, B-19
61917 ..... B-17, B-19
61918 ..... B-17, B-19
61922 ..... B-17, B-19
61924 ..... B-17, B-19
61933 ..... B-17, B-19
61936 ..... B-17, B-19
61974 ..... B-17
61977 ..... B-17
62055 ..... F-9
62110 ..... C-5
62113 ..... A-4
62125 ..... B-17, B-19
62126 ..... B-17, B-19
62132 ..... B-17, B-19
62140 ..... C-5
62171-GRN B-27, B-33, B-35, B-47, B-49, B-63
62172-GRN B-23
62173 ..... B-16
62174 ..... B-16
62175 ..... B-16
62176 ..... B-16
62178 ..... B-17, B-19
62179 ..... B-17, B-19
62180 ..... B-17, B-19
62181 ..... B-17, B-19
62194 ..... B-17, B-19
62210 ..... B-17
62212 ..... B-17
62243 ..... B-17, B-19
62253 ..... E-12
62254 ..... B-19
62257 ..... H-4
62259 ..... C-11
62267 ..... B-17
62284 ..... E-15
62288 ..... E-17
62289 ..... E-16
62379 ..... B-17, B-19
62471 ..... B-17, B-19
62652 ..... C-27
62741 ..... E-17
62756 ..... B-8
63019 ..... B-19
63057 ..... B-19
63064 ..... C-20
63068 ..... B-19
63089 ..... E-15
63092 ..... B-19
63114 ..... B-19
63115 ..... B-19
63128 ..... C-21
63144 ..... C-26
63147 ..... C-26
63148 ..... C-26
63156 ..... B-19
63177 ..... B-19
63178 ..... B-19
63179 ..... B-19
63202 ..... G-2
63207 ..... G-2
63210 ..... H-5
63222-XX D-14
63230 ..... G-2
63282 ..... C-20, C-21
63283 ..... C-20
63284 ..... C-21
63285 ..... C-20, C-21
63292 ..... C-20, C-21
63293 ..... C-21
63294 ..... C-21
63295 ..... C-21
63296 ..... C-21
63299 ..... C-21
63302 ..... G-2
63304 ..... G-2
63305 ..... G-2
63306 ..... G-2
63310 ..... C-21
63316 ..... C-21
63323 ..... G-47
63324 ..... G-47
63348 ..... G-47
63349 ..... G-47
63350 ..... G-47
63351 ..... G-47
63352 ..... G-47
63353 ..... G-47
63354 ..... G-47
63355 ..... G-47
63358 ..... G-47
63359 ..... G-47
63362 ..... G-47
63363 ..... G-47
63364 ..... G-47
63365 ..... G-47
63576 ..... E-15
63765 ..... B-23
63767 ..... B-23
63768 ..... B-23
63790 ..... B-5, B-9
63793 ..... B-23
63794 ..... B-4, B-8, B-22
63811 ..... G-26
63842-ROTO-6 ..... G-21, H-8
63842-ROTO-8 ..... G-21, H-8
63842-ROTO-10 ..... G-21, H-8
63842-SWVL-6 ..... G-25, H-8
63842-SWVL-8 ..... G-25, H-8
63842-SWVL-10 ..... G-25, H-8
63843-H3O G-27
63843-ROTO G-21, H-9
63843-SWVL G-25, H-9
63888 ..... C-17
63944 ..... G-16
63945 ..... G-16
64054 ..... G-24
64180 ..... G-23, G-24
64189 ..... G-47
64190 ..... G-47
64191 ..... G-47
64192 ..... G-47
64233 ..... G-23
64234 ..... G-23
64247 ..... G-23
64266 ..... F-3, F-4, F-5, F-6, F-8, F-9, F-10
64298 ..... H-11
64299 ..... H-11
64300 ..... H-11
64452-L15-8 ..... G-22, G-25, H-10
64452-L15-12 ..... G-22, G-25, H-10
64452-L20 ..... H-10
64452-L40 ..... H-10
64452-M15-8 ..... G-22, G-25, H-10
64452-M15-12 ..... G-22, G-25, H-10
64452-M20 ..... H-10
64452-M40 ..... H-10
64452-S15-8 ..... G-22, G-25, H-10
64452-S15-12 ..... G-22, G-25, H-10
64452-S20 ..... H-10
64452-S40 ..... H-10
64625 ..... H-20
64682 ..... G-16, G-31
64772 ..... G-6
64823 ..... G-13
64827 ..... G-13
64828 ..... G-13
64864 ..... G-13
64883 ..... B-5, B-9
64915 ..... G-12
64998 ..... C-9, C-15
64999 ..... C-9, C-15
65001 ..... C-9
65002 ..... C-9, C-15
65011 ..... C-9, C-15
65012 ..... C-9, C-15
65023 ..... B-18
65025 ..... B-2
65082 ..... B-5, B-9
65094 ..... G-16
65095 ..... G-16
65162 ..... G-23
65166-05 ..... G-20
65166-10 ..... G-20
65166-15 ..... G-20
65187 ..... B-66
65207 ..... G-31
65213 ..... G-30
65214 ..... G-28
65215 ..... G-28
65216 ..... G-30
65217 ..... G-28
65218 ..... G-31
65219 ..... G-30
65220 ..... G-28
65221 ..... G-28, G-31
65225 ..... G-6
65226 ..... G-28
65227 ..... G-30
65228 ..... G-30

65229 ..... G-28
65230 ..... G-28, G-31
65231 ..... G-16
65232 ..... G-16
65233 ..... G-26, G-28
65234 ..... G-30
65236 ..... G-31
65237 ..... G-30, G-31
65238 ..... G-30
65239 ..... G-28
65240 ..... G-28
65241 ..... G-31
65242 ..... G-30
65243 ..... G-30
65244 ..... G-30
65245 ..... G-30
65246 ..... G-30
65247 ..... G-30
65248 ..... G-31
65250 ..... G-31
65272 ..... G-6
65273 ..... G-6
65274 ..... G-6
65275 ..... G-6
65289 ..... G-30
65290 ..... G-28
65291 ..... G-31
65292 ..... G-28
65293 ..... G-30
65297 ..... G-28
65298 ..... G-28
65300 ..... G-31
65301 ..... G-31
65323 ..... G-23
65326 ..... G-23
65327 ..... G-23
65328 ..... G-23
65333 ..... G-28, G-31
65367 ..... G-26
65368 ..... C-10
65380 ..... G-12
65381 ..... G-12
65385 ..... G-13
65388 ..... G-13
65402 ..... G-31
65409 ..... G-28
65410 ..... G-28
65411 ..... G-30
65412 ..... G-30
65413 ..... G-30
65414 ..... G-30
65415 ..... G-30
65416 ..... G-30
65417 ..... G-30
65419 ..... G-30
65420 ..... G-30
65421 ..... G-30
65452 ..... G-30
65453 ..... G-30
65454 ..... G-28, G-30
65455 ..... G-30
65456-01 ..... G-24, G-27
65456-02 ..... G-24, G-27
65456-06 ..... G-24, G-27
65456-12 ..... G-24, G-27
65456-24 ..... G-24, G-27
65456-30 ..... G-24, G-27
65456-36 ..... G-24, G-27
65456-42 ..... G-24, G-27
65456-XX G-31
65463 ..... G-28
65479 ..... G-12
65480 ..... G-12
65481 ..... G-12
65482 ..... G-12
65483 ..... G-12
65484 ..... G-12
65498 ..... H-17
65633 ..... G-26
65634 ..... G-26
65644 ..... H-11
65645 ..... G-28
65656 ..... C-7
65664 ..... G-26
65665 ..... G-26
65666 ..... G-26
65667 ..... G-26
65670 ..... H-5
65675 ..... G-27
65676 ..... G-27
65677 ..... G-27
65678 ..... G-27
65729 ..... G-27
65739 ..... F-5
65740 ..... F-6
65741 ..... F-5, F-6
65742 ..... F-9
65745 ..... F-5
65746 ..... F-6
65747 ..... F-7, F-9
65816 ..... G-24, G-30
65871 ..... B-18
65904 ..... C-21
65911 ..... H-11
65925 ..... H-11
65978 ..... G-24
65998 ..... F-3, F-4, F-6, F-8, F-9, F-10
66090 ..... H-11
66104-06 ..... G-21, G-25, H-8
66104-08 ..... G-21, G-25, H-8
66104-10 ..... G-21, G-25, H-8
66114 ..... F-11, F-12
66137 ..... G-13
66138 ..... G-13
66139 ..... G-27
66168 ..... B-2
66170 ..... G-16, G-20
66187 ..... B-18
66188 ..... B-18
66199 ..... G-24
66215 ..... G-8
66216 ..... G-8
66217 ..... G-8
66218 ..... G-8
66220 ..... G-13
66250 ..... G-8
66251 ..... G-8
66252 ..... G-8
66253 ..... G-8
66254 ..... G-8
66255 ..... G-8
66256 ..... G-8
66257 ..... G-8
66315-008 ..... C-21
66317 ..... C-21
66322 ..... C-21
66328 ..... C-21
66329 ..... C-21
66339 ..... G-26
66347 ..... G-13
66348 ..... G-13
66358 ..... G-27, G-31
66359 ..... G-27, G-29
66360 ..... G-27, G-28
66361 ..... G-27, G-28
66509 ..... B-2
66510 ..... B-2
66511 ..... B-2
66512 ..... B-2
66513 ..... B-2
66514 ..... B-2
66515 ..... B-2
66516 ..... B-2
66517 ..... B-2
66518 ..... B-2
66519 ..... B-2
66520 ..... B-2
66523 ..... B-2
66524 ..... B-2
66560 ..... E-13
66607 ..... C-5
66608 ..... C-5
66645 ..... H-17
66646 ..... H-17
66647 ..... H-17
66648 ..... H-17
66687 ..... H-16
66688 ..... H-16
66689 ..... H-16
66690 ..... H-16
66691 ..... H-16
66692 ..... H-16
66693 ..... H-16
66694 ..... H-16
66695 ..... H-16
66696 ..... H-16
66697 ..... H-16
66698 ..... H-16
66699 ..... H-16
66700 ..... H-16
66701 ..... H-17
66702 ..... H-17
66703 ..... H-17
66704 ..... H-17
66705 ..... H-17
66706 ..... H-17
66707 ..... H-17
66708 ..... H-16
66709 ..... H-16
66710 ..... H-16
66711 ..... H-16
66712 ..... H-16
66713 ..... H-16
66714 ..... H-16
66715 ..... H-16
66716 ..... H-16
66717 ..... H-16

66718 ..... H-16
66719 ..... H-16
66720 ..... H-16
66721 ..... H-16
66722 ..... H-17
66723 ..... H-17
66724 ..... H-17
66725 ..... H-17
66726 ..... H-17
66727 ..... H-17
66728 ..... H-17
66729 ..... H-16
66730 ..... H-16
66731 ..... H-16
66732 ..... H-16
66733 ..... H-16
66734 ..... H-16
66740 ..... G-13
66741 ..... G-13
66743 ..... H-5
67173 ..... E-12
70034-36 ..... G-72
70034-50 ..... G-72
70034-60 ..... G-72
70034-80 ..... G-72
70034-120 ..... G-72
70039 ..... B-21
70040 ..... E-9
70130 ..... C-17
70167 ..... E-10
70168 ..... E-10
70174 ..... C-17
70179 ..... C-5
70206 ..... B-5, B-9
70742 ..... F-3, F-5, F-6, F-8, F-9, F-10
70968 ..... C-27
71016 ..... B-13
71017 ..... B-6, B-10
71066 ..... C-21
71147 ..... B-6, H-20
71147-FE B-23, B-27, H-20
71254 ..... C-27
71318 ..... B-6, B-10, B-13
71496 ..... C-17
71613 ..... H-18
71614 ..... H-18
71615 ..... H-18
71742 ..... H-20
71743 ..... H-2
71744 ..... H-20
90262 ..... E-3
92011 ..... E-5
96048 ..... E-3
E0 ..... G-64
E1 ..... G-64
E2 ..... G-64
E3 ..... G-64
E4 ..... G-64
EX1 ..... G-66
EX3 ..... G-66
EX4 ..... G-66
EX5 ..... G-66
EX6 ..... G-66
FB2 ..... G-57
FB4 ..... G-57
FM7 ..... G-55, G-57
FP1 ..... G-59
FP3 ..... G-59
FP4 ..... G-59
FP5 ..... G-59
FP6 ..... G-59
FP7 ..... G-59
FPC1 ..... G-60
FPC3 ..... G-60
FPC4 ..... G-60
FPC5 ..... G-60
FPC6 ..... G-60
FPT1 ..... G-63
FPT3 ..... G-63
FPT4 ..... G-63
FPT5 ..... G-63
FPT6 ..... G-63
HHS0-025 ..... G-37
HHS0-029 ..... G-37
HHS0-033 ..... G-37
HHS0-038 ..... G-37
HHS0-042 ..... G-37
HHS0-046 ..... G-37
HHS0-055 ..... G-37
HHTC0-018 ..... G-36
HHTC0-020 ..... G-36
HHTC0-022 ..... G-36
HHTC0-024 ..... G-36
HHTC0-026 ..... G-36
HHTC0-029 ..... G-36
HHTC0-032 ..... G-36
HHTC0-035 ..... G-36
HHTC0-038 ..... G-36
HHTC0-042 ..... G-36
HHTC0-047 ..... G-36
HHTC0-052 ..... G-36
HHTC0-057 ..... G-36
HHTC0-063 ..... G-36
HHTC0-067 ..... G-36
HHTC0-069 ..... G-36
HHTC0-073 ..... G-36
HHTC0-075 ..... G-36
HHTC0-078 ..... G-36
HHTC0-082 ..... G-36
HHTC0-090 ..... G-36
HHTC0-093 ..... G-36
HHTC0-098 ..... G-36
HHTC0-106 ..... G-36
HHTC0-110 ..... G-36
HHTC0-115 ..... G-36
HHTC0-125 ..... G-36
HHTC0-135 ..... G-36
HHTC0-145 ..... G-36
HHTC0-155 ..... G-36
HHTC0-165 ..... G-36
HHTC15-029 ..... G-36
HHTC15-038 ..... G-36
HHTC15-042 ..... G-36
HHTC15-047 ..... G-36
HHTC15-057 ..... G-36
HHTC15-063 ..... G-36
HHTC15-067 ..... G-36
HHTC15-069 ..... G-36
HHTC15-073 ..... G-36
HHTC15-078 ..... G-36
HHTC15-082 ..... G-36
HHTC15-090 ..... G-36
HHTC15-093 ..... G-36
HHTC25-047 ..... G-36
HHTC25-057 ..... G-36
HHTC25-063 ..... G-36
HHTC25-067 ..... G-36
HHTC25-069 ..... G-36
HHTC25-073 ..... G-36
HHTC25-078 ..... G-36
HHTC25-093 ..... G-36
HHTC50-057 ..... G-36
HHTC50-063 ..... G-36
HHTC50-067 ..... G-36
HHTC50-069 ..... G-36
HHTC50-073 ..... G-36
HHTC50-078 ..... G-36
J55624 ..... D-14
J55681 ..... D-14
J55690 ..... H-3
J55701 ..... E-5
J55702 ..... E-5
J55703 ..... E-8
J55704 ..... E-10
J55705 ..... C-6
J55706 ..... E-10
J55707 ..... E-10
J55708 ..... E-10
J55709 ..... E-10
J55710 ..... C-13
J55711 ..... E-10
J55712 ..... E-11
J55713 ..... E-11
J55714 ..... E-11
J55716 ..... E-11
J55717 ..... E-11
J55719 ..... E-6
J55720 ..... B-29
J55773 ..... B-39
J55775 ..... B-28, B-38
J55785 ..... H-6
J55789 ..... E-12
J55874 ..... C-18, C-19
J55878 ..... C-18, C-19
J56204 ..... C-27
J56366 ..... C-7, C-13
J56371 ..... C-22
J70315 ..... H-19
J70316 ..... H-18
J70317 ..... H-18
J70318 ..... H-18
J70321 ..... H-18
J70322 ..... H-19
J70323 ..... H-19
J70324 ..... H-19
J70326 ..... H-19
J70327 ..... H-19
J70377-M G-72
J70377-XL G-72
J70378-C G-72
J70378-F G-72
J70378-M G-72
J70380 ..... E-3
J70381 ..... E-3
J70382 ..... E-7
J70383 ..... E-7
J70384 ..... E-7

J70385 ..... E-7
J70386 ..... E-7
J70387 ..... E-7
J70388 ..... E-7
J70389 ..... E-7
J70390 ..... E-7
J70391 ..... E-7
J70392 ..... E-6
J70393 ..... E-9
J70413 ..... H-19
J70518 ..... B-21
J70633 ..... C-7, C-10, C-13
J70804 ..... H-7
J70816 ..... C-7, C-11
J70832 ..... C-21
J70914 ..... B-17, B-19
J70917 ..... C-27
JS2-018 ..... G-39
JS2-020 ..... G-39
JS2-022 ..... G-39
JS2-024 ..... G-39
JS2-026 ..... G-39
JS2-029 ..... G-39
JS2-032 ..... G-39
JS2-035 ..... G-39
JS2-038 ..... G-39
JS2-042 ..... G-39
JS2-047 ..... G-39
JS2-052 ..... G-39
JS2-057 ..... G-39
JS2-063 ..... G-39
JS2-069 ..... G-39
JS2-075 ..... G-39
JS2-082 ..... G-39
JS2-090 ..... G-39
JS2-098 ..... G-39
JS2-106 ..... G-39
JS2-115 ..... G-39
JS2-125 ..... G-39
JS2-135 ..... G-39
JS2-145 ..... G-39
JS2-PLUG G-39
JS4-018 ..... G-40
JS4-020 ..... G-40
JS4-022 ..... G-40
JS4-024 ..... G-40
JS4-026 ..... G-40
JS4-029 ..... G-40
JS4-032 ..... G-40
JS4-035 ..... G-40
JS4-038 ..... G-40
JS4-042 ..... G-40
JS4-047 ..... G-40
JS4-052 ..... G-40
JS4-057 ..... G-40
JS4-063 ..... G-40
JS4-069 ..... G-40
JS4-075 ..... G-40
JS4-082 ..... G-40
JS4-090 ..... G-40
JS4-098 ..... G-40
JS4-106 ..... G-40
JS4-115 ..... G-40
JS4-125 ..... G-40
JS4-135 ..... G-40
JS4-145 ..... G-40
JS4-155 ..... G-40
JS4-165 ..... G-40
JS4F-018 ..... G-40
JS4F-020 ..... G-40
JS4F-022 ..... G-40
JS4F-024 ..... G-40
JS4F-026 ..... G-40
JS4F-029 ..... G-40
JS4F-032 ..... G-40
JS4F-035 ..... G-40
JS4F-038 ..... G-40
JS4F-042 ..... G-40
JS4F-047 ..... G-40
JS4F-052 ..... G-40
JS4F-057 ..... G-40
JS4F-063 ..... G-40
JS4F-069 ..... G-40
JS4F-075 ..... G-40
JS4F-082 ..... G-40
JS4F-090 ..... G-40
JS4F-098 ..... G-40
JS4F-106 ..... G-40
JS4F-115 ..... G-40
JS4F-135 ..... G-40
JS4F-145 ..... G-40
JS4F-155 ..... G-40
JS4F-165 ..... G-40
JS4F-PLUG G-40
MP1 ..... G-68
MP2 ..... G-68
MP3 ..... G-68
MP4 ..... G-68
MS1 ..... G-69
MS2 ..... G-69
MS3 ..... G-69
OX-018 ..... G-3
OX-025 ..... G-3
OX-029 ..... G-3
OX-033 ..... G-3
OX-038 ..... G-3
OX-042 ..... G-3
OX-046 ..... G-3
P1-038 ..... G-37
P1-042 ..... G-37
P1-046 ..... G-37
P1-055 ..... G-37
P1-062 ..... G-37
P1-067 ..... G-37
P1-070 ..... G-37
P1-073 ..... G-37
P1-078 ..... G-37
P1S0-018 ..... G-41
P1S0-025 ..... G-41
P1S0-029 ..... G-41
P1S0-033 ..... G-41
P1S0-038 ..... G-41
P1S0-042 ..... G-41
P1S0-046 ..... G-41
P1S0-052 ..... G-41
P2TC-018 ..... G-38
P2TC-020 ..... G-38
P2TC-022 ..... G-38
P2TC-024 ..... G-38
P2TC-026 ..... G-38
P2TC-029 ..... G-38
P2TC-032 ..... G-38
P2TC-035 ..... G-38
P2TC-038 ..... G-38
P2TC-042 ..... G-38
P2TC-047 ..... G-38
P2TC-052 ..... G-38
P2TC-057 ..... G-38
P2TC-063 ..... G-38
P2TC-067 ..... G-38
P2TC-069 ..... G-38
P2TC-073 ..... G-38
P2TC-075 ..... G-38
P2TC-078 ..... G-38
P2TC-082 ..... G-38
P2TC-090 ..... G-38
P2TC-093 ..... G-38
P2TC-098 ..... G-38
P2TC-106 ..... G-38
P2TC-110 ..... G-38
P2TC-115 ..... G-38
P2TC-125 ..... G-38
P2TCS-018 ..... G-39
P2TCS-020 ..... G-39
P2TCS-022 ..... G-39
P2TCS-024 ..... G-39
P2TCS-026 ..... G-39
P2TCS-029 ..... G-39
P2TCS-032 ..... G-39
P2TCS-035 ..... G-39
P2TCS-038 ..... G-39
P2TCS-042 ..... G-39
P2TCS-047 ..... G-39
P2TCS-052 ..... G-39
P2TCS-057 ..... G-39
P2TCS-063 ..... G-39
P2TCS-067 ..... G-39
P2TCS-069 ..... G-39
P2TCS-073 ..... G-39
P2TCS-075 ..... G-39
P2TCS-078 ..... G-39
P2TCS-082 ..... G-39
P2TCS-090 ..... G-39
P2TCS-093 ..... G-39
P2TCS-098 ..... G-39
P2TCS-106 ..... G-39
P2TCS-110 ..... G-39
P2TCS-115 ..... G-39
P2TCS-125 ..... G-39
P4TC-018 ..... G-17, G-18, G-38
P4TC-020 ..... G-38
P4TC-022 ..... G-38
P4TC-024 ..... G-38
P4TC-025 ..... G-17, G-18
P4TC-026 ..... G-38
P4TC-029 ..... G-17, G-18, G-38
P4TC-032 ..... G-38
P4TC-033 ..... G-17, G-18
P4TC-035 ..... G-38
P4TC-038 ..... G-17, G-18, G-38
P4TC-042 ..... G-17, G-18, G-38
P4TC-046 ..... G-17, G-18
P4TC-047 ..... G-38
P4TC-052 ..... G-38
P4TC-055 ..... G-17, G-18
P4TC-057 ..... G-38
P4TC-063 ..... G-17, G-18, G-38
P4TC-067 ..... G-17, G-18, G-38

P4TC-069 ..... G-38
P4TC-070 ..... G-17, G-18
P4TC-073 ..... G-17, G-18, G-38
P4TC-075 ..... G-38
P4TC-078 ..... G-18, G-38
P4TC-081 ..... G-18
P4TC-082 ..... G-38
P4TC-089 ..... G-18
P4TC-090 ..... G-38
P4TC-093 ..... G-18, G-38
P4TC-098 ..... G-38
P4TC-106 ..... G-38
P4TC-110 ..... G-18, G-38
P4TC-115 ..... G-38
P4TC-125 ..... G-38
RM-018 ..... G-17, G-41
RM-024 ..... G-41
RM-025 ..... G-17, G-18
RM-029 ..... G-17, G-18, G-41
RM-032 ..... G-41
RM-033 ..... G-17, G-18
RM-038 ..... G-17, G-18, G-41
RM-042 ..... G-17, G-18, G-41
RM-046 ..... G-17, G-18
RM-047 ..... G-41
RM-055 ..... G-17, G-18
RM-057 ..... G-41
RM-063 ..... G-17, G-18, G-41
RM-067 ..... G-17, G-18, G-41
RM-069 ..... G-41
RM-070 ..... G-17, G-18
RM-073 ..... G-17, G-18, G-41
RM-078 ..... G-18, G-41
RM-081 ..... G-18
RM-082 ..... G-41
RM-089 ..... G-18
RM-090 ..... G-41
RM-093 ..... G-18, G-41
RM-110 ..... G-18, G-41
RM-PLUG..... G-16
RMS-018 ..... G-19, G-42
RMS-025 ..... G-19, G-42
RMS-029 ..... G-19, G-42
RMS-033 ..... G-19, G-42
RMS-038 ..... G-19, G-42
RMS-042 ..... G-19, G-42
RMS-046 ..... G-19, G-42
RMS-052 ..... G-19, G-42
S137W-8-11-B..... C-2
S137W-8-11-S..... C-2
S137W-10-10-B..... C-2
S137W-10-10-S..... C-2
S137W-12-9-B..... C-2
S142H-5-15-S C-2
S142H-6-15-S C-2
S142H-6-16-S C-2
S142H-8-13-B C-2
S142H-8-13-S C-2
S142H-8-15-B C-2
S142H-8-15-S C-2
S142H-8-16-B C-2
S142H-8-16-S C-2
S142H-10-11-B..... C-2
S142H-10-11-S..... C-2
S142H-10-12-B..... C-2
S142H-10-12-S..... C-2
S142H-10-13-B..... C-2
S142H-10-13-S..... C-2
S142H-10-15-B..... C-2
S142H-10-15-S..... C-2
S142H-12-10-B..... C-2
S142H-12-10-S..... C-2
S142H-12-11-B C-2
S142H-12-11-S C-2
S142H-12-12-B..... C-2
S142H-12-12-S C-2
S142H-12-13-B..... C-2
S142H-12-13-S..... C-2
S142H-15-9-B C-2
S142H-15-9S..... C-2
S142H-15-10-B..... C-2
S142H-15-10-S..... C-2
S142H-15-11-B..... C-2
S142H-15-11-S C-2
S142H-15-12-B..... C-2
S142H-15-12-S..... C-2
S422-20-11-B C-2, C-3
S422-20-11-S C-2, C-3
S1300-6-11-B..... C-2
S1300-6-11-S..... C-2
S1300-8-10-B C-2
S1300-8-10-S..... C-2
S1300-8-11-B..... C-2
S1300-8-11-S..... C-2
S1300-10-9-B C-2
S1300-10-9-S..... C-2
S1300-10-10-B..... C-2
S1300-10-10-S..... C-2
S1300-12-8-B..... C-2
S1300-12-8-S..... C-2
S1300-12-9-B..... C-2
S1300-12-9-S..... C-2
S1300-15-7-B C-2
S1300-15-7-S C-2
S1300-15-8-B C-2
S1300-15-8-S..... C-2
S1301-6-11-S C-2
S1301-8-10-B..... C-2
S1301-8-10-S..... C-2
S1301-8-11-B C-2
S1301-8-11-S C-2
S1301-10-9-B..... C-2
S1301-10-9-S..... C-2
S1301-10-10-B C-2
S1301-12-8-B C-2
S1301-12-8-S C-2
S1301-15-7-S..... C-2
S1301-15-8-B..... C-2
S1301-15-8-S C-2
S1371-15-8-B C-2
S1371-15-8-S C-2
SP37W-8-11-B C-3
SP37W-8-11-S C-3
SP37W-10-10-B C-3
SP37W-10-10-S C-3
SP37W-12-9-B C-3
SP37W-12-9-S C-3
SP37W-15-8-B C-3
SP37W-15-8-S C-3
SP42H-5-15-S..... C-3
SP42H-6-15-S..... C-3
SP42H-6-16-S..... C-3
SP42H-8-13-B..... C-3
SP42H-8-13-S..... C-3
SP42H-8-15-B..... C-3
SP42H-8-15-S..... C-3
SP42H-8-16-B..... C-3
SP42H-8-16-S..... C-3
SP42H-10-11-B C-3
SP42H-10-11-S..... C-3
SP42H-10-12-B C-3
SP42H-10-12-S C-3
SP42H-10-13-B C-3
SP42H-10-13-S C-3
SP42H-10-15-B C-3
SP42H-10-15-S C-3
SP42H-12-10-B C-3
SP42H-12-10-S C-3
SP42H-12-11-B..... C-3
SP42H-12-11-S..... C-3
SP42H-12-12-B C-3
SP42H-12-12-S..... C-3
SP42H-12-13-B C-3
SP42H-12-13-S C-3
SP42H-15-9-B..... C-3
SP42H-15-9-S..... C-3
SP42H-15-10-B C-3
SP42H-15-10-S C-3
SP42H-15-11-B C-3
SP42H-15-11-S..... C-3
SP42H-15-12-B C-3
SP42H-15-12-S C-3
SP300-6-11-B C-3
SP300-6-11-S C-3
SP300-8-10-B..... C-3
SP300-8-10-S..... C-3
SP300-8-11-B C-3
SP300-8-11-S C-3
SP300-10-9-B..... C-3
SP300-10-9-S..... C-3
SP300-10-10-B C-3
SP300-10-10-S C-3
SP300-12-8-B..... C-3
SP300-12-8-S C-3
SP300-12-9-B..... C-3
SP300-12-9-S C-3
SP300-15-7-B C-3
SP300-15-7-S C-3
SP300-15-8-B..... C-3
SP300-15-8-S..... C-3
SP301-6-11-B..... C-3
SP301-6-11-S..... C-3
SP301-8-10-B C-3
SP301-8-10-S C-3
SP301-8-11-B..... C-3
SP301-8-11-S..... C-3
SP301-10-9-B C-3
SP301-10-9-S C-3
SP301-10-10-B..... C-3
SP301-10-11-S C-3
SP301-12-9-S..... C-3
SP301-15-7-B..... C-3
SP301-15-7-S..... C-3
SP301-15-8-B C-3
SP301-15-8-S C-3
SP301-15-9-B C-3
SP301-15-9-S C-3
SP371-15-8-B C-3

SP371-15-8-S.....C-3
SP421-5-15-S.....C-3
SP421-6-15-S.....C-3
SP421-8-13-B C-3
SP421-8-13-S.....C-3
SP421-8-15-B C-3
SP421-8-15-S.....C-3
SP421-10-11-B C-3
SP421-10-11-S C-3
SP421-10-12-B C-3
SP421-10-12-S C-3
SP421-10-13-B.....C-3
SP421-10-13-S.....C-3
SP421-10-15-B.....C-3
SP421-10-15-S.....C-3
SP421-12-10-B C-3
SP421-12-10-S C-3
SP421-12-11-B C-3
SP421-12-11-S.....C-3
SP421-12-12-B C-3
SP421-12-12-S C-3
SP421-12-13-B C-3
SP421-12-13-S C-3
SP421-15-9-B C-3
SP421-15-9-S.....C-3
SP421-15-10-B.....C-3
SP421-15-10-S.....C-3
SP421-15-11-B C-3
SP421-15-11-S C-3
SP421-15-12-B C-3
SP421-15-12-S C-3
TP4 .....G-70
TP5 .....G-70
TP6 .....G-70
UHPX-018.....G-4
UHPX-019 .....G-4
UHPX-020 .....G-4
UHPX-021 .....G-4
UHPX-022 .....G-4
UHPX-023 .....G-4
UHPX-024 .....G-4
UHPX-025 .....G-4, G-5
UHPX-026 .....G-4, G-5
UHPX-027 .....G-4, G-5
UHPX-028 .....G-4, G-5
UHPX-029 .....G-4, G-5
UHPX-030 .....G-4, G-5
UHPX-031 .....G-4, G-5
UHPX-032 .....G-4, G-5
UHPX-033 .....G-4, G-5
UHPX-034 .....G-4, G-5
UHPX-037 .....G-4, G-5
UHPX-038 .....G-4, G-5
UHPX-042 .....G-4, G-5
UHPX-046 .....G-5
UHPXD-018.....G-4
UHPXD-019.....G-4
UHPXD-020 .....G-4
UHPXD-021.....G-4
UHPXD-022 .....G-4
UHPXD-023 .....G-4
UHPXD-024.....G-4
UHPXD-025 .....G-4, G-5
UHPXD-026 .....G-4, G-5
UHPXD-027.....G-4, G-5
UHPXD-028 .....G-4, G-5
UHPXD-029 .....G-4, G-5
UHPXD-030 .....G-4, G-5
UHPXD-031.....G-4, G-5
UHPXD-032 .....G-4, G-5
UHPXD-033 .....G-4, G-5
UHPXD-034 .....G-4, G-5
UHPXD-037 .....G-4, G-5
UHPXD-038 .....G-4, G-5
UHPXD-042 .....G-4, G-5
UHPXD-046 .....G-5
UHPXi-018.....G-4
UHPXi-019 .....G-4
UHPXi-020 .....G-4
UHPXi-021 .....G-4
UHPXi-022 .....G-4
UHPXi-023 .....G-4
UHPXi-024 .....G-4
UHPXi-025 .....G-4, G-5
UHPXi-026 .....G-4, G-5
UHPXi-027 .....G-4, G-5
UHPXi-028 .....G-4, G-5
UHPXi-029 .....G-4, G-5
UHPXi-030 .....G-4, G-5
UHPXi-031 .....G-4, G-5
UHPXi-032 .....G-4, G-5
UHPXi-033 .....G-4, G-5
UHPXi-034 .....G-4, G-5
UHPXi-037 .....G-4, G-5
UHPXi-038 .....G-4, G-5
UHPXi-042 .....G-4, G-5
UHPXi-046 .....G-5
UHPX-PLUG.....G-2

PRODUCTS

A

Abrasive Pot, G-72
Abrasives, G-72
  MaxxStrip Magnesium Sulphate/Kieserite G-72
  Sharpjet Garnet, G-72
  Softstrip Sodium Bicarbonate, G-72
American Aero/Whitford, B-74
Anti-Seize, Thread Lubricant, E-1
Automated Waterblasting Solutions, A-5

B

Bareshaft Pumps. *See* UNx Bareshaft Pumps
Blue Goop Thread Lubricant, E-1
Boots, H-15, H-19
Burst Discs, C-29
Bypass Valve, B-19

C

Cartridges
  Bypass Valve, B-19
  C-15 Dump, F-2
  CPSi-15 Shut-In, C-13
  Hydro-Throttle
    Cartridge, C-22, C-23
  Uni-Valve, B-15, B-18, B-19, B-21, B-23, B-25, B-26, B-27, B-33, B-35, B-37, B-39, B-41, B-43, B-47, B-49, B-51, B-53, B-57, B-59, B-63, B-67, B-69, B-71, B-75
Centralizers, H-8
  Cage Style, G-21, G-25, H-10, G-27
  Scissor Style, G-22, G-25, H-10
  Skid Style, G-21, G-25, H-8
Connection Types, I-2
  British Standard Pipe (BSPP), I-6
  Jetstream HHP Male Adapters, I-4
  Medium Pressure (MP), I-7
  Metric, I-5
  Pipe Threads (NPT), I-2
  Straight Boss, I-6
  Type M, I-4
Control Guns
  Durasafe Foot Guns, F-11
    Dump Style, F-11
    Shut-In Style, F-12
  Durasafe Hand Guns
    Dump Style, F-2
      Field Repairable, F-5
      Partially Field Repairable, F-4
      Welded, F-3
    HHS0 Nozzles, G-37
    HHTC Nozzles, G-36
    Shut-In Style, F-7
      Field Repairable, F-9
      Welded, F-8
  Zero-Thrust Hand Gun, F-10
Cooler Tube, Vortex, H-15
Custom Units, A-3

D

Diesel Units, A-1, A-2, A-3

E

Electric Units, A-3
Extensions
  Gauge Extension, E-2

F

Face Shield, H-18
Filters
  Bags, C-27
  Guardian System, C-27
  Standard Filters, C-27
Fittings, E-1
  Anti-Vibration, E-21
  Couplings, E-5
    Quick Connect, E-2
      Screw Type, E-3
      Twis-Lok, E-2
    Quick Disconnect
      Lug Style, E-3
  Crosses, E-3
  Elbows, E-4
  Hammer Unions, E-5
  Hex Nipples, E-7
  High Pressure, E-2, E-3
    High Pressure HHP Male To Type M Male Adapters, E-2, E-3
  Jetstream HF Male Adapters, E-14
    Clockable Adapter Fittings, E-15
    Plug, E-15

to Female NPT E-15
to Metric Male E-15
to Pipe Thread Male (NPT) E-14
to Type M Male E-14
Jetstream HHP Male Adapters E-16
Clockable Adapter Fittings E-17
Fittings E-17
Plug E-16
to Medium Pressure Female E-16
to Metric Female E-17
to Metric Male E-16
to Pipe Thread Male (NPT) E-16
to Type M Male E-16
Medium Pressure Anti-Vibration Gland Assemblies E-21
Medium Pressure Connections E-17
Crosses E-17
Elbows E-18
Male-to-Female E-19
Male-to-Male E-19
Straight Couplings E-18
Tees E-18
Union Couplings E-19
Medium Pressure Gland Nuts, Collars and Plugs E-20
Medium Pressure Nipples E-20
Medium Pressure Slimline Lance Couplings E-21
Pressure Conversion E-10
Pipe Thread Female (NPT Female)
to British Standard Pipe (BSPP) Male Adapters E-12
to High Pressure Male Adapter E-12
to Medium Pressure Female Adapters E-11
to Medium Pressure Male Adapters E-11
to Metric Male Adapters E-13
to Type M Male Adapters E-10
Pipe Thread Male (NPT Male)
to British Standard Pipe (BSPP) Male Adapters E-12
to Medium Pressure Female Adapters E-11
to Medium Pressure Male Adapters E-10
to Metric Male Adapters E-12
to Type M Male Adapters E-10
Type M Male Connectors E-13
to Medium Pressure Male E-14
Reducing Bushings E-6
Tees E-4
Flex Lances
Safety Grip H-6
Fluid End Upgrades. *See* UNx Fluid End Upgrades
Gardner-Denver Tf-450 Pumps B-32–B-33, B-33–B-34, B-34–B-35, B-35–B-36, B-36–B-37, B-37–B-38, B-38–B-39, B-39–B-40, B-40–B-41, B-41–B-42
Foot Protection
Shin & Foot Guards H-19
TST Boots 3000 H-15

G

Gaiters.....H-15
Gauge Accessories
Gauge Adapter E-2
Gauge Extension E-2
Gauge Adapter.....C-28
Gauge Extension ...C-28
Gauges
Belt Tension C-5
Gauge Adapter C-28
Gauge Extension C-28
Pressure C-28
Gloves
TST Pro-Operator Gloves H-17
Grease Remover, TST H-15
Guns. *See* Control Guns

H

H_3Orbiter G-26
Accessories
Centralizer G-27
Nozzle Extensions G-27
Tow Ring G-27
Manifolds G-27
Hand Guns. *See* Control Guns, Durasafe Hand Gun
Hard Hats.....H-19
High Pressure E-2, E-3
High Pressure Fittings. *See* Fittings, High Pressure
Hose
Hose Connection Cover H-4
Hose Shrouds, TST H-4
Safety Hose Checks H-5
Strain Relief Hose H-4
Hose Checks.....H-5
Hoses D-1–D-2
Hydroforce Units....A-3
Hydro-Throttle.....C-22, C-23

J

J-Force Series G-6, G-8, G-12

K

Kick Plate Assy G-27

L

Lubricants, Thread, E-1

M

Multi-Unit Manifolds (MUM) C-25

N

NLB B-46, B-48, B-50, B-52, B-74
Nozzles
Abrasive Injector Nozzle G-71
Carbide Orifices
HHTC Series G-33, G-36
OX Series G-3, G-33
P2TC Series G-33, G-38
P2TCS Series G-39
P4TC Series G-33, G-38
RM Series G-17, G-33, G-41
J-ForceG-6, G-8, G-12
Nozzle Number Cross-Reference Chart G-36
Orbi-Jet QCX
UHPX Series Sapphire Nozzles G-4
Orbi-Jet X22 G-2
Pipe Cleaning G-43
Rotomag X22 G-16
2-D Pipe Cleaning Nozzle G-16
RM Series Carbide Nozzles G-17
RMS Series Sapphire Nozzles G-19
Sapphire Orifices
HHS0 Series G-34, G-37
P1S0 Series G-34, G-41
RMS Series G-19, G-34, G-42
Spool Nozzles G-72
Stainless Steel Orifices
JS2 Series G-35, G-39
JS4F Series G-35, G-40
JS4 Series G-35, G-40
P1 Series G-34, G-37
Swivel X15 G-23
Tube Cleaning G-47
Accessories G-61
C Series G-51, G-61
E Series G-52, G-64
EX Series G-52, G-66
FB Series G-55, G-57
FM7 Series G-55, G-57
FPC Series G-50, G-60
FP Series G-50, G-59
FPT Series G-51, G-63
MP Series G-53, G-68
MS Series G-53, G-69
Selection & Part Numbering G-49
TP Series Thrusters G-54, G-70
Tube Spinner G-47
Nozzle Shut-Off Valve (NSOV) C-26

O

Online Training with Federal Signal ESG University A-4
Orbi-Jet X22.....G-2

P

Parts. *See* Replacement Parts
Pipe Cleaning Tool
H3Orbiter G-26
J-Force Series G-6
RotoMag X22 G-16
Swivel X15 G-23
Pump Accessories
Air Compressor C-21
Electronic Hydro-Throttle C-22
Hydro-Throttle C-22, C-23
Mechanical Hydro-Throttle C-23
Standard Filters C-27
Thread Lubricants E-1
Tools
1/4" T-Wrench (Hex Key) C-5
3/16" T-Wrench (Hex Key) C-5

Belt Tension Gauges, C-5
Gland Nut Tool, C-5
Manifold Mounting Studs, C-4
O-Ring Pick, C-5
Pump Wrenches, C-4
Valve Puller, C-5

R

Rain Suits, H-19
Replacement Parts
Safety Shrouds, H-3
Right Start Program, A-4
RotoMag X22, G-16
Accessories, G-21, G-21–G-22, G-22, G-22–G-23
Centralizers, G-21
Nozzle Extensions, G-20
Nozzle Plugs, G-20
The Warden, G-22
Rupture Disc Holders, C-29

S

Safe Operation & Maintenance Training Class, A-4
Safety
Caution Sign, H-19
Covered Safety Whips, H-4
Decal, H-20
Flex Lance Safety Grip, H-6
Safety Accessories
Boots, H-19
Ear Plugs, H-18
Face Shield, H-18
Goggles, H-18
Hard Hat, H-19
Shin & Foot Guards, H-19
The Warden, H-7
Water Protection Suits, H-19
Safety Apparel
TST Apron, H-15
TST Balaclava, H-15
TST Boots 3000, H-15
TST Delta Kit, H-12
TST Gaiters, H-15
TST Gamma KitH-12
TST Hand Protection, H-14
TST Jacket, H-13
TST Overall, H-14
TST Pro-Operator Gloves, H-17
TST Sigma Kit, H-13
TST Trousers, H-13, H-16, H-17
TST Waistcoat, H-14
TST Waistcoat w/Apron, H-15
TST Waterjet Protection, H-12
Turtleskin Waterarmor, H-18
Safety Grip Accessories, H-6
Lance Stop Retainers, H-6
Lance Stops, H-6
Safety Grip Shield, H-6
Safety Hose Checks, H-5
Shrouds, H-3
Sign, H-19
Tape, H-19
TST Grease Remover, H-15
TST Hose Shrouds, H-4
Vortex Cooler Tube, H-15
Warning Sticker, H-19
Safety Glasses, H-18
Safety Grip, Flex Lance, H-6
Safety Manual, A-4
Safety Shrouds, H-3
TST Hose Shrouds, H-4
Safety Tape, Signs And Decals, H-19, H-20
Safety Whips, Covered, H-4
Shin & Foot Guards, H-19
Shin Protection, H-19
Signs, H-19
Sonetics® Apex Wireless Headset, H-11
Surface Cleaning Tools
Orbi-Jet X22, G-2
Swivel X15, G-23
Accessories
Centralizers, G-24, G-25

T

Thread Lubricants, E-1
Tools
Tow Rings, G-20
Trailers. *See* Units
Training, A-4
Right Start Program, A-4
Tube Spinner, G-47
Turtleskin Waterarmor, H-18

U

Unit Conversions & Formulas, I-1
Units, A-1
6000 Series, A-2
Custom, A-3
Electric, A-3
Hydroforce, A-3
TwinForce, A-1
X-Series, A-2
UNx Bareshaft Pumps
Features & Benefits, B-1
Model 3015, B-11
Model 3615HF, B-7
Model 4215HF, B-4, B-7
Model 6015, B-2
UNx Fluid End
Spare Parts Packages, C-2
UNx Fluid Ends
Features & Benefits, B-15
Model 3015, B-26
Model 3615 (Gen 1), B-24
Model 3615HF, B-22
Model 4215, B-24
Model 4215HF, B-22
Model 5015Q, B-20
Model 6015 (Version 1), B-16
Model 6015 (Version 3), B-18
UNx Fluid End Upgrades, B-28
Butterworth/Gardner Denver Upgrades, B-31, B-40
Model 3015B, B-32, B-40
Model 3715B, B-34, B-36, B-37, B-38, B-39, B-40, B-41, B-42, B-43, B-46, B-47, B-48, B-49, B-50, B-51, B-52, B-53, B-56, B-57, B-58, B-59, B-62, B-63, B-66, B-67, B-68, B-69, B-70, B-71, B-74, B-75
International Style Conversions, B-30
Multiple Manufacturer Upgrade, B-73
NLB Upgrades, B-45
Tritan/Wheatley Upgrades, B-55
Weatherford Upgrade, B-61
Woma Upgrades, B-65

V

Valves
Bypass, B-19
Hand Adjustable, C-16
Diverter
Dump Style
Air-Operated, C-6
Electric/Air-Operated, C-8
Hydraulic-Operated, C-10
Shut-In Style
Air-Operated, C-13
Electric/Air-Operated, C-14
Multi-Gun Valve (MGV), C-24
Regulator
Shut-In
Air-Operated, C-20
Hand Adjustable, C-18
Severe Service Relief Valve, C-30
Uni-Valve, B-15, B-18, B-19, B-21, B-23, B-25, B-26, B-27, B-33, B-35, B-37, B-39, B-41, B-43, B-47, B-49, B-51, B-53, B-57, B-59, B-63, B-67, B-69, B-71, B-75
Videos
Maintenance DVD, C-5
Visual Safety System, H-2

W

Waterblast Units. *See* Units
Whips
Covered Safety, H-4

X

X-Series Units, A-1, A-2

Jetstream of Houston, LLP

5905 Thomas Rd. • Houston, TX 77041

Phone: (832) 590-1300 • Fax: (832) 590-1304 • Toll Free: (800) 231-8192

www.waterblast.com

The Worldwide Leader in TOTAL Solutions for Challenging Waterblasting Applications.

FS Solutions

Jetstream products are also serviced by FS Solutions, with 13 convenient locations across the United States. FS Solutions provides high-performance parts, accessories, Jetstream rentals, repair, rebuild and safety training.

Gonzales, LA
(225) 647-0660

LaPorte, TX
(281) 674-8668

Leeds, AL
(800) 822-8785

Highland, IN
(219) 924-3180

Streator, IL
(815) 672-6028

Long Beach, CA
(866) 515-9891

Prairieville, LA
(225) 372-7678

Lakewood, WA
(253) 584-0653

Williston, ND
(701) 572-7421

New Brunswick, NJ
(732) 448-7830

Salt Lake City, UT
(800) 231-8192

Toledo, OH
(888) 415-7368

Lexington, SC
(803) 996-0741

Midland, TX
(432) 563-4450

Federal Signal Corporation is listed on the NYSE by the symbol FSS.
Specifications and equipment listed are subject to change without notice.
Some photos are shown with optional equipment.

P/N J70394-C-1 Effective 08/01/19
© 2019 Jetstream of Houston, LLC. All rights reserved.