Jetstream®

Subsidiary of Federal Signal Corporation

PRODUCT CATALOG

15,000 PSI

1,034 BAR

WORLDWIDE LEADER

IN **TOTAL** WATER BLASTING SOLUTIONS

Jetstream of Houston is a leading supplier of innovative water blasting solutions for a wide range of applications, including industrial cleaning, surface preparation, hydro-demolition and abrasive waterjet cutting.

Jetstream is committed to providing customers with safe, sure, simple solutions in everything we do. Our total water blasting solutions include:

- Manufacture and distribution of quality industrial high-pressure water blasting units, pumps, parts and accessories; that are built to last and easy to maintain
- Leading the way with an approved Visual Safety System (VSS) color-coding on most water blasting components for safer operation within each pressure range
- Providing a wide range of application appropriate automation tools - for safe, hands-free cleaning
- Sharing Application Expertise with customers for the best total solution approach for maximum productivity
- Training - operators on the application, product operation and safety
- Rentals for short-term or rent to own - units, accessories, automation tools - complete with training
- Service equipment with experienced technicians, provide 24/7 support by telephone and ship parts quickly (most same day)

TOTAL WATER BLASTING SOLUTIONS

24/7 SERVICE AND SUPPORT TAILORED TO YOU

The 24/7 Support Program provides Jetstream customers uninterrupted access to critical parts and accessories, service and expertise to keep the job running, no matter what time of day.

800.231.8192
832.590.1300
Jetstream Support Standard business hours
7 am – 6 pm CST

832.590.1369
After Hours Support Hotline

Jetstream TwinForce 800HP Unit

SOME INDUSTRIES WE SERVE:

- CHEMICAL
- PETROCHEMICAL
- STEEL MILLS
- POWER GENERATION
- MARINE
- CONSTRUCTION
- MINING
- OIL FIELD
- MILITARY
- HYDRO-DEMOLITION

TYPICAL APPLICATIONS:

- TUBE AND TUBE BUNDLE CLEANING
- PIPE CLEANING
- STACK CLEANING
- COLLING TOWER CLEANING
- TANK CLEANING
- FACILITIES MAINTENANCE
- GRATE AND FLOOR CLEANING
- AUTOMOTIVE PAINT BOOTH CLEANING
- SHIP HULL CLEANING
- UNDERWATER CLEANING
- KILN CLEANING
- SURFACE PREPARATION
- HYDROSTATIC TESTING
- BOP TESTING
- CONCRETE DEMOLITION
- WATERJET CUTTING

INNOVATIVE

ENGINEERED SOLUTIONS

Jetstream pioneered the use of valve cartridges to allow accessories to be repaired in the field in minutes.

Nozzles that spin on a bearing of water.

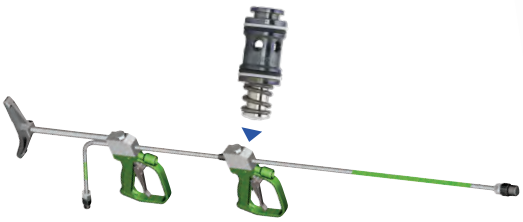

Worldwide, the UNx pump design is the easiest to maintain and operate.

TOOL RENTALS

Jetstream provides pumps, parts, and tool rentals for all the demands of your job. You can pick up the equipment you need, or we can deliver it straight to your job site. Our tools are ready to work the second they arrive on-site and are backed by our world-class customer support team and highly trained technicians that are committed to the success of your project.

BEST-IN-CLASS SERVICE AND SUPPORT, TAILORED TO YOU

Jetstream is a subsidiary of Federal Signal Corporation's Environmental Solutions Group. Member companies include Vactor Manufacturing, TRUVAC, Guzzler Manufacturing, Westech Vac Systems, Ltd., and Elgin Sweeper Company.

If you need service and support for your equipment, Jetstream has you covered with the most experienced and customer-focused team in the industry.

In the United States, our products are serviced by FS Solutions. With 13 convenient locations, FS Solutions provides high-performance parts and accessories, Jetstream rentals, repair and rebuild, and safety training services. In Canada, Joe Johnson Equipment (JJE) is there to handle your every need.

Whatever your needs may be, Jetstream offers a full range of products, services, and customized solutions designed to keep your products and projects running smoothly, effectively, and efficiently!

VALVE REBUILD PROGRAM

Get same as new performance and reliability for your valves with Jetstream's Valve Rebuild Program (VRP).

The program utilizes OEM parts and processes to maximize the value of your equipment by:

- Reducing hourly operational costs
- Boosting up-time
- Optimizing reliability
- Restoring original system performance
- Increasing return on investment

We guarantee to provide new seals, springs, suction/discharge valve, and lapping with every rebuild.

TRADE-IN PROGRAM

The Trade-In Program offers customers an opportunity to exchange any competitor tools for credit towards Jetstream Signature Series Premium Kits. Tools do not have to be functional, but they must be a complete part.

**Discounts applied at the time of trade-in.*

UNITS

TwinForce™ Units A-1
6000 Series Units A-2
X-Series Units A-2
HydroForce™ Units A-3
Electric Units A-3
Custom Units A-3
Training A-4
Automatedwaterblastingsolutions A-5

PUMPS & FLUID ENDS

UNx™ Bareshaft Pumps B-1
UNx Fluid Ends B-23
UNx Fluid End Upgrades B-40

PUMP ACCESSORIES

Spare Parts Packages C-2
Tools C-4
Dump-Style Diverter Valves C-6
- Air-Operated C-6
- Electric/Air-Operated C-8
- Hydraulic-Operated C-10

Shut-In Style Diverter Valves C-12
- Air-Operated C-12
- Electric/Air-Operated C-14

Bypass Valves C-16
Shut-In Regulator Valves C-18
- Air-Operated C-20

Regulator Valve C-22
22K Air-Operated Regulator C-24
Electronic Hydro-Throttle C-25
Mechanical Hydro-Throttle C-26
Multi-Gun Valve (MGV) C-27
Severe Service Relief Valve C-28
Multi-Unit Manifolds (MUM) C-29
Hydrostatic Test Valve (HTV) C-30
- For Use With Foot Valve C-32

20K Check Valve C-33
Nozzle Shut-Off Valve (Nsov) C-34
Standard Filters C-35
- Filter Bags C-35

Guardian Tank Fill Valve Assembly C-36
Dessicant Breather C-36
Pressure Gauges C-37
Gauge Extension C-37
Gauge Adapter C-37
Rupture Disc Holders C-38
Burst Discs C-38

HOSES & LANCES

Rubber Waterblast Hoses D-2
Thermoplastic Hoses D-4
Thermoplastic Flex Lances D-5
Thermoplastic Hoses & Flex Lances D-7
Stainless Steel Braided Flex Lances D-9
Steelflex™ Lances D-12
Rigid Lances D-13
Pressure Drop Data D-15

FITTINGS

Thread Lubricants & Teflon Tape E-1
Gauge Accessories E-2
- Gauge Extension E-2
- Gauge Adapter E-2

Quick Connect Couplings E-2
- Twis-Lok Quick Connect Couplings E-2
- Screw Type Quick Connect Couplings E-3

Crosses E-3
Tees E-4
Elbows E-4
Hammer Unions E-5
Couplings E-5
Reducing Bushings E-6
Hex Nipples E-7
Nipples E-8
Plugs E-8
Y-Fittings E-9
Rigid Lance Adapters E-9
Dual Lance Manifolds E-9
Straight Boss Plugs E-9
Pressure Conversion Fittings E-10
Jetstream HF Male Adapters E-14
Jetstream HHP Male Adapters E-16
Medium Pressure Connections E-17
- Gland Nuts, Collars And Plugs E-20
- Nipples E-20
- Anti-Vibration Gland Assemblies E-21
- Slimline Lance Couplings E-21

Rotolink™ E-22

CONTROL GUNS

Durasafe™ Hand Guns F-2
- Dump Style F-2
- Zero-Thrust Hand Guns F-7
- Shut-In Style F-8

Durasafe™ Foot Guns F-11
- Dump Style F-11
- Shut-In Style F-12

ROTARY, STRAIGHT,PIPE & TUBE CLEANING TOOLS & NOZZLES

Orbi-Jet™ X22 ..... G-2
J-Force™ G-6
RotoMag™ X22 ..... G-20
Swivel X15 ..... G-27
H_3 Orbiter™ G-30
HP Surface Cleaning Nozzles G-36
Replaceable Nozzle Tips G-40

Pipe Cleaning Nozzles G-59
DrillJet™ G-63
Tube Spinner™ G-65
Tube Cleaning Nozzles G-67
Abrasive Injector Nozzle G-89
Spool Nozzles G-90
Abrasives G-90

SAFETY APPAREL & EQUIPMENT

Visual Safety System H-2
Safety Shrouds H-3
TST® Hose Shrouds H-4
Strain Relief Hose H-4
Hose Connection Cover H-4
Safety Hose Checks H-5
Flex Lance Safety Grip H-6
Flexstop™ H-7
The Warden™ H-8
Centralizers H-9
Versaboom™ H-13
Sonetics® Apex Wireless Headset H-14
TST Workplace Safety Solutions H-15
TST Waterjet Protection H-16
Turtleskin® Waterarmor H-22
Safety Accessories H-23
Safety Tape, Signs And Decals H-24
Safety Literature And Media H-24

TECHNICAL

Unit Conversions & Formulas I-1
Connection Types I-2

INDEX

Part Numbers J-1
Products J-21

NLB, Butterworth-Partek, Gardner-Denver, Woma, JobBox, Turtleskin, TST, Sonetics, Blue Goop, LocTite, Cordura, Tritan, Weatherford, Wheatley, Union, Universal Minerals, Sharpjet, MaxxStrip, SofStrip, Swagelok, DuPont, Teflon, Partek, Warwick Mills, North Safety, and American Aero are trademarked and/or registered tradenames of their respective companies. Jetstream disclaims any and all rights to these marks.

Jetstream reserves the right to suspend or discontinue the sale of any product contained herein or perform any modifications to product design without prior notification.

UNITS

Jetstream waterblasters are available in a wide selection of standard models with nearly limitless options for customization to suit specific needs. All Jetstream waterblasters employ UNx™ Fluid End technology for superior performance, greater flexibility in the field, and reduced downtime and maintenance (see page B-23 for details).

HORSEPOWER CHART

COMMON ENGINE POWERS		PUMP DISPLACEMENT* AT 8,000 PSI (551 BAR)	
hp	kW	gpm	lpm
TWINFORCE™			
800	600	154.0	582
650	484	125.2	470
MODEL 6015			
600	447	115.4	437
MODEL 5215			
400	300	77.0	291
MODEL 4215			
325	242	62.6	237
250	186	48.6	183
220	164	40.0	151
MODEL 3615			
170	126	36.0	136
MODEL 3015			
150	112	23.2	88
125	93	23.2	88
110	82	18.4	69

* Displacement (flow) values represented refer to "theoretical" flow, neglecting inefficiency resulting from compressibility of water and expansion of pressure-bearing components.

Values shown are for diesel engines only. Contact Jetstream for electric unit chart.

TWINFORCE™ UNITS

The TwinForce series was engineered to outperform other high-flow units by providing a multi-functional product to enhance the utilization of two waterblasting units on one single trailer.

- Two 325 or 400 hp high performance diesel engines
- Pilot bearing free PTOs and covered banded belt drives
- Dual Slave Control Panels for multiple control of both engines from either side
- Dual Water Filters
- High pressure discharge from both units combined into a single control station
- Dual Fuel Tanks
- Tier 4 Engines

6000 SERIES UNITS

The 6000 Series waterblasting system is engineered to outperform and outlast any other unit of its kind.

- 600 hp Volvo Tier 4 engines without the need for a diesel particulate filter.
- Pressure Lubricated Gear Drive Power End
- High-Capacity Aluminum Fuel Tank (Canadian Certified)
- Triple Filtration System - First in its class
- Standard Charge Pump
- Patented Jetstream UNx Fluid End system

X-SERIES UNITS

From the innovative UNx pump down to the EZ-Lube wheel bearings, every detail of the X-Series was engineered to minimize maintenance and provide contractors with the most productive and versatile waterblaster on the market today.

- 80 to 400 hp (59 to 300 kW) high performance diesel engines
- Pilot bearing free PTOs and covered banded belt drives
- Guardian Waterblast Filtration System extends component life and increases uptime with built-in filtration
- Available as a skid or low profile trailer with balanced weight distribution for stable towing
- State-of-the-art controls
- Electronic throttle control
- Hand-adjustable bypass valve
- Shutdown system to protect both the engine and the pump

HYDROFORCE™ UNITS

JETSTREAM OIL & GAS EQUIPMENT

In the oil and gas industry, hydrostatic testing has always been a primary function. Jetstream strives to provide not only HydroForce™ waterblasting units with pressures up to 22,500 psi, but a complete solution with the assorted tools needed to perform testing with confidence, ensuring accurate blow-out pipeline (BOP) and wellhead testing.

- 80 hp to 325 hp (59 to 242 kW)high performance diesel engines (Electric unit option available)
- Options including: Heavy duty lifting frame, 10,000 psi hydraulic system for torque tools, a JobBox, a digital or manual chart recorder, hydraulic hose reel or auxiliary hose stand

ELECTRIC UNITS

Jetstream manufactures several models of electric waterblasters for in-plant installations configured to user requirements.

- 60 to 600 hp (45 to 447 kW)
- TEFC or explosion proof motors
- Soft-start or VFD starters
- Stationary skid

CUSTOM UNITS

In addition to a wide selection of standard units and options, close collaboration between Jetstream solutions providers and engineers provide almost unlimited custom options to meet specific needs. Common requests include:

- Custom trailers and skids
- Special control devices (pneumatic, electronic, hydraulic)
- Customizable to meet special plant requirements Jetstream can build the perfect unit for any job

TRAINING

Jetstream RightStart

In order to ensure customer satisfaction, Jetstream has developed the Right Start program, a four-step plan designed to provide the owners and operators of new Jetstream waterblast units with the knowledge and support needed to feel familiar, confident and satisfied with Jetstream equipment and personnel.

1. Transportation

Once a new waterblaster is built and thoroughly tested, the Shipping Manager contacts the new owner to arrange for the unit's arrival to the right place at the right time.

2. Training

All new waterblasters include personal training by the Right Start Technician. Training involves both classroom and "hands-on" instruction to make sure that each operator is thoroughly familiar with the design and function of the unit and accessories, enabling him to safely put the new equipment to optimal use.

3. Follow-up

Within thirty days of delivery, and again within sixty days, the Solutions Provider will call to answer any questions and ensure complete satisfaction.

4. Trust

If any questions or problems ever arise, the Jetstream team is available and committed to providing prompt answers and solutions.

CLASSES OFFERED

PUMP OPERATION & MAINTENANCE

The course combines extensive hands-on training with classroom instruction and is recommended for maintenance personnel, operator and supervisors.

Class Length: 3 days

Class Size: 10 maximum

Location: Jetstream Manufacturing Training Center
Houston, TX

Call for class schedules and availability. Classes can be tailored to those in attendance.

This course covers:

- Safe waterblast operation
- Unit maintenance and troubleshooting
- Physical application and related safety issues
- Safe pump operation
- Pump maintenance
- The UNx System (10K, 20K and 40K)
- Swapping fluid ends
- Waterblast guns
- Pedals and accessories
- Uni-valves
- Proper packing, disassembly, repair and re-lapping
- Hoses, lances, nozzles
- Recommended spare parts
- Preventative maintenance and winterization

SAFETY-FS SOLUTIONS

As the experts on waterblast and industrial vacuum equipment. FS Solutions makes OSHA training and compliance more convenient than ever through hands on courses developed by Gary Toothe, whose significant contributions and 25 years of experience are well-known in the waterblast and industrial vacuum industries.

ONLINE WITH FEDERAL SIGNAL ESG UNIVERSITY

- Work at your pace and convenience
- Remain compliant with OSHA training
- Safety increase productivity
- Decrease risk of future liability

Additional Tools

- Jetstream Safety Manual Part No. 62113

AUTOMATED WATERBLASTING SOLUTIONS

Automation is a rapidly growing waterblast solution for tube cleaning, tank and boiler cleaning, surface preparation and hydro-demolition. Hands-free operation is key to a safe work environment. Positioning the operator at a distance, away from the work area, is the number one benefit to utilizing automated tools. This placement away from direct contact with the high pressure application allows for quick reaction time and decreases the possibility for employee injury.

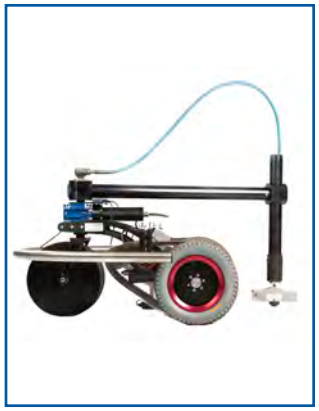

To enhance operator safety, productivity and efficiency, Jetstream has partnered with strategic manufacturers of specialty equipment in automated and robotic tools and accessories. These alliances allow Jetstream to provide a total solution to the customer, from the waterblasting unit to the tools needed to perform the job safely and efficiently.

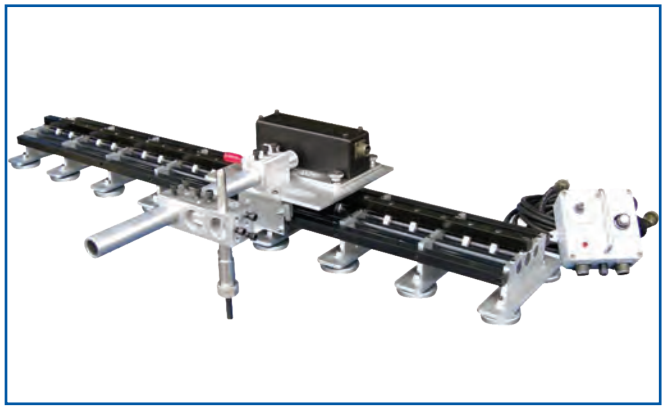

Offering the broadest range of automation solutions for industrial cleaning contractors, Jetstream provides:

- The broadest offering of hands free cleaning solutions
- Innovative, automated and robotic tools and accessories
- On-site solutions provided by regional automation specialists
- Rent or purchase options on a variety of state-of-the-art tooling
- Convenience with availability through Jetstream and FS Solutions rental centers
- Robotic and mechanical hydro-demolition solutions available for rent
- Application and safety training

For a list of products offered, contact your Regional Sales Manager or Inside Sales Technician for more details.

Jetstream®
Subsidiary of Federal Signal Corporation

UNx™ BARESHAFT PUMPS

UNRIVALED STRENGTH AND DURABILITY

The Jetstream 15,000 psi UNx Bareshaft Pump provides unrivaled durability and strength. The pump is capable of power inputs up to 700 horsepower and, coupled with the best Jetstream UNx fluid end, provides flow* rates approaching one-hundred and ten gallons per minute. Jetstream bareshaft pumps are the best choice for those building their own system or replacing a complicated, worn, or unreliable pump.

The following UNx Bareshaft Pumps are available:

- 6000 Series (6015): 600HP @ 115.4 gpm
- 5200Q Series (5215Q): 709HP @ 109.8 gpm
- 5200 Series (5215): 400 HP @ 90.4 gpm
- 4200 Series (4215): 325HP @ 73.5 gpm
- 3600 Series (3615): 270HP @ 27.4 gpm
- 3000 Series (3015): 200HP @ 23.2 gpm

Twenty-three different pump displacement levels are available within the six series. See pages B-2, B-5, B-10, B-13, B-16 and B-20 for further details.

FEATURES AND BENEFITS

- The strongest ductile iron power frame in the industry is made tough to last
- A heat-treated billet alloy steel crankshaft delivers superior performance at high power inputs
- The largest bearings of any pump on the market to prevent overheating
- Components designed to be easily serviced and maintained to reduce downtime
- Use of simple, bolt-on Jetstream UNx™ Fluid Ends for fast in-the-field pressure range conversions to allow one pump to perform multiple applications
- See more UNx Fluid End features and benefits on page B-23

An optional gear drive is available on the 3000, 3600, 4200 and 5200 Series Bareshaft Pumps. Several configurations are available. See pages B-11, B-14, B-18, and B-21 for ratio information. Clocking position required when ordering.

Please refer to the **Jetstream Bareshaft Pump Operation Manual** for general installation guidelines. Contact Jetstream Engineering for detailed technical guidance and design review before installing any Jetstream bareshaft pump.

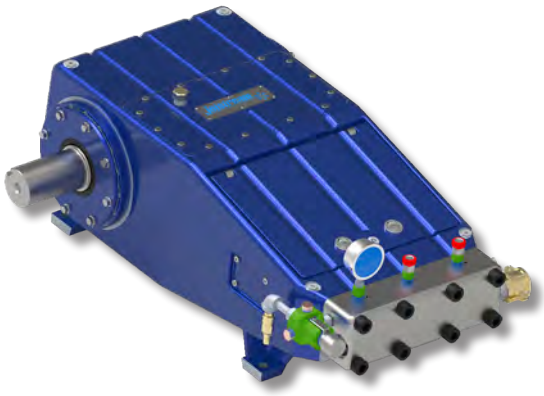

NOTE

The customer can specify the placement of the crankshaft (right-hand or left-hand side) and paint color for a bareshaft pump. Standard paint color is blue. Other paint colors are available upon request.

*Displacement (flow) values represented refer to "theoretical" flow, neglecting inefficiency resulting from compressibility of water and expansion of pressure-bearing components.

MODEL 6015

UNX™ BARESHAFT PUMP

The Jetstream model 6015 waterblast pump is capable of power input of up to 600 horsepower (447 kW). It is the most advanced and efficient compact waterblast pump in the industry. Combining the strength and durability of a proven power end workhorse with the unparalleled simplicity, serviceability and versatility of the UNx fluid end design, Jetstream bareshaft pumps are the best choice for those building their own system or replacing a complicated, worn, or unreliable pump.

- Up to 600 horsepower (447 kW)
- Maximum Flow: 61.7 gpm (233.6 lpm) at 15,000 psi (1034 bar)
  64.1 gpm (242.7 lpm) at 14,000 psi (965 bar)
  92.7 gpm (350.9 lpm) at 10,000 psi (689 bar)
  115.4 gpm (436.8 lpm) at 8,000 psi (551 bar)
- Three plunger (triplex) design

KEY FEATURES

- Internal Gear Drive

POWER END SPECS

PLUNGERS			CONNECTION TYPE (DISCHARGE)	PUMP SPEED RANGE	MAX. POWER INPUT		MAX. FRAME LOAD		TOTAL WEIGHT		PUMP OIL*		
#	STROKE										TYPE	CAPACITY	
	in	mm		RPM	hp	kW	lb	kN	lb	kg		gal	l
3	5.51	140	Jetstream HF	100-457	600	447	28,775	128	2800	1270	ISO-320	11.9	45

* See manual for list of approved oils.

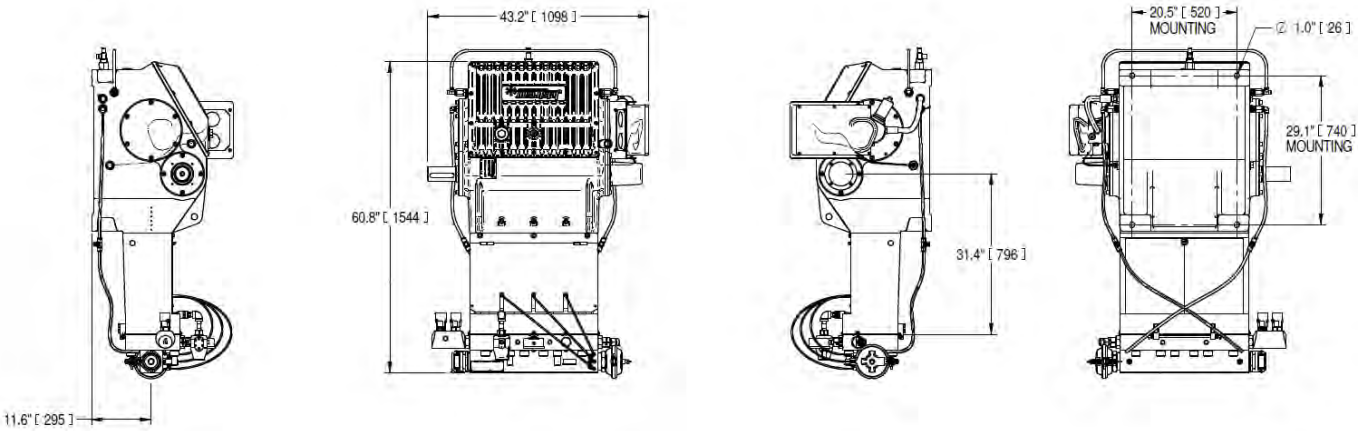

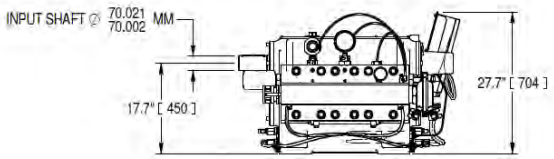

FLUID END SPECS

PUMP AY PART NO.*	PLUNGER SIZE			GEAR RATIO	PUMP DISPLACEMENT AT SPECIFIED PUMP SPEEDS**												MAX. OPERATING PRESSURE	
	NO.	DIAMETER			1200 RPM		1400 RPM		1600 RPM		1800 RPM		2000 RPM		2100 RPM			
		in	mm		gpm	lpm	gpm	lpm	gpm	lpm	gpm	lpm	gpm	lpm	gpm	lpm	psi	bar
66510	15	1.55	39.37	3.96 LH	40.9	155	47.8	180.9	54.6	206.7	61.7	233.6	-	-	-	-	15,000	1034
66511				3.96 RH	40.9	155	47.8	180.9	54.6	206.7	61.7	233.6	-	-	-	-		
66509				4.60 LH	35.2	133.5	41.1	155.7	47	178	52.9	200.2	58.7	222.4	61.7	233.6		
65025				4.60 RH	35.2	133.5	41.1	155.7	47	178	52.9	200.2	58.7	222.4	61.7	233.6		
66514	16	1.58	40.13	3.96 LH	42.5	161.1	49.6	187.9	56.7	214.8	64.1	242.6	-	-	-	-	14,500	1000
66168				3.96 RH	42.5	161.1	49.6	187.9	56.7	214.8	64.1	242.6	-	-	-	-		
66512				4.60 LH	36.6	138.7	42.7	161.8	48.8	184.9	54.9	208	61	231.1	64.1	242.7		
66513				4.60 RH	36.6	138.7	42.7	161.8	48.8	184.9	54.9	208	61	231.1	64.1	242.7		
66517	19	1.90	48.26	3.96 LH	61.5	233	71.8	271.8	82	310.6	92.8	351.3	-	-	-	-	10,000	689
66518				3.96 RH	61.5	233	71.8	271.8	82	310.6	92.8	351.3	-	-	-	-		
66515				4.60 LH	53	200.5	61.8	234	70.6	267.4	79.4	300.8	88.3	334.2	92.7	350.9		
66516				4.60 RH	53	200.5	61.8	234	70.6	267.4	79.4	300.8	88.3	334.2	92.7	350.9		
66523	21	2.12	53.85	3.96 LH	76.6	290	89.4	338.4	102.1	386.7	115.4	436.8	-	-	-	-	8,000	551
66524				3.96 RH	76.6	290	89.4	338.4	102.1	386.7	115.4	436.8	-	-	-	-		
66519				4.60 LH	65.9	249.4	76.9	291	87.9	332.7	98.9	374.3	109.9	416.0	115.4	436.8		
66520				4.60 RH	65.9	249.4	76.9	291	87.9	332.7	98.9	374.3	109.9	416.0	115.4	436.8		

* Contact a Jetstream Solutions Provider to verify order lead time for power ends.
** Flow values represented refer to "theoretical" flow, neglecting inefficiency resulting from compressibility of water and expansion of pressure bearing components.

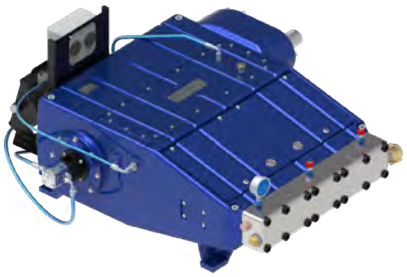

MODEL 5215Q

UNX™ BARESHAFT PUMP

The Jetstream model 5215Q waterblast pump is capable of power input of up to 700 horsepower (522 kW). It is the most advanced and efficient compact waterblast pump in the industry. Combining the strength and durability of a proven power end workhorse with the unparalleled simplicity, serviceability and versatility of the UNx fluid end design, Jetstream bareshaft pumps are the best choice for those building their own system or replacing a complicated, worn, or unreliable pump.

- Five plunger (quintuplex) design

KEY FEATURES

- Next generation Jetstream pump design
- Locking rod box designed for ultimate safety, protection, and ease of service
- Crankshaft supported by four bearings for long life operation
- Pressurized and filtered oiling system with cooling fan and high temperature and low pressure shutdown system
- Internal packing lube system protected inside the rod box
- Fully Integrated precision gear drive with shared oil sump
- Quintuplex design for reduced pulsation and vibration
- Maximum Flow: 109.8 gpm (416 lpm) at 10,000 psi (690 bar)

POWER END SPECS

MAX. POWER INPUT		PLUNGERS			CONNECTION TYPE (DISCHARGE)	PUMP RPM RANGE	MAX. FRAME LOAD		TOTAL WEIGHT		PUMP OIL*		
		#	STROKE								TYPE	CAPACITY	
hp	kW		in	mm	Jetstream HF		lb	kN	lb	kg		gal	l
700	522	5	5.25	133		200-547	17,716	79	5000	2268	80W-90*	27	102

*See manual for list of approved oils.

FLUID END SPECS

PUMP PART NO.	PLUNGER SIZE			INPUT RPM	GEAR RATIO	MAX. POWER INPUT		FLOW AT SPECIFIED PUMP SPEEDS**				COOLING FAN VOLTAGE	MAX. OPERATING PRESSURE	
	NO.	DIAMETER						538 RPM		547 RPM				
		in	mm			hp	kW	gpm	lpm	gpm	lpm		psi	bar
69254-3.3-12V	#12	1.200	30.48	1800	3.3	700	522	--	--	70.3	266	12V	15,000	1035
69254-3.3-24V								--	--			24V		
69293-3.3-12V	#13	1.335	33.91					--	--	87.0	329	12V	12,500	863
69293-3.3-24V								--	--			24V		
69294-3.3-12V	#15	1.500	38.10					--	--	109.8	416	12V	10,000	690
69294-3.3-24V								--	--			24V		
69254-3.9-12V	#12	1.200	30.48	2100	3.9	700	522	69.2	262	--	--	12V	15,000	1035
69254-3.9-24V										--	--	24V		
69293-3.9-12V	#13	1.335	33.91					85.6	324	--	--	12V	12,500	863
69293-3.9-24V										--	--	24V		
69294-3.9-12V	#15	1.500	38.10					108.1	409	--	--	12V	10,000	690
69294-3.9-24V										--	--	24V		

**Flow values represented refer to "theoretical" flow, neglecting inefficiency resulting compressibility of water and expansion of pressure-bearing components. Actual values may vary

MODEL 5215Q UNx™ BARESHAFT PUMP DIAGRAMS

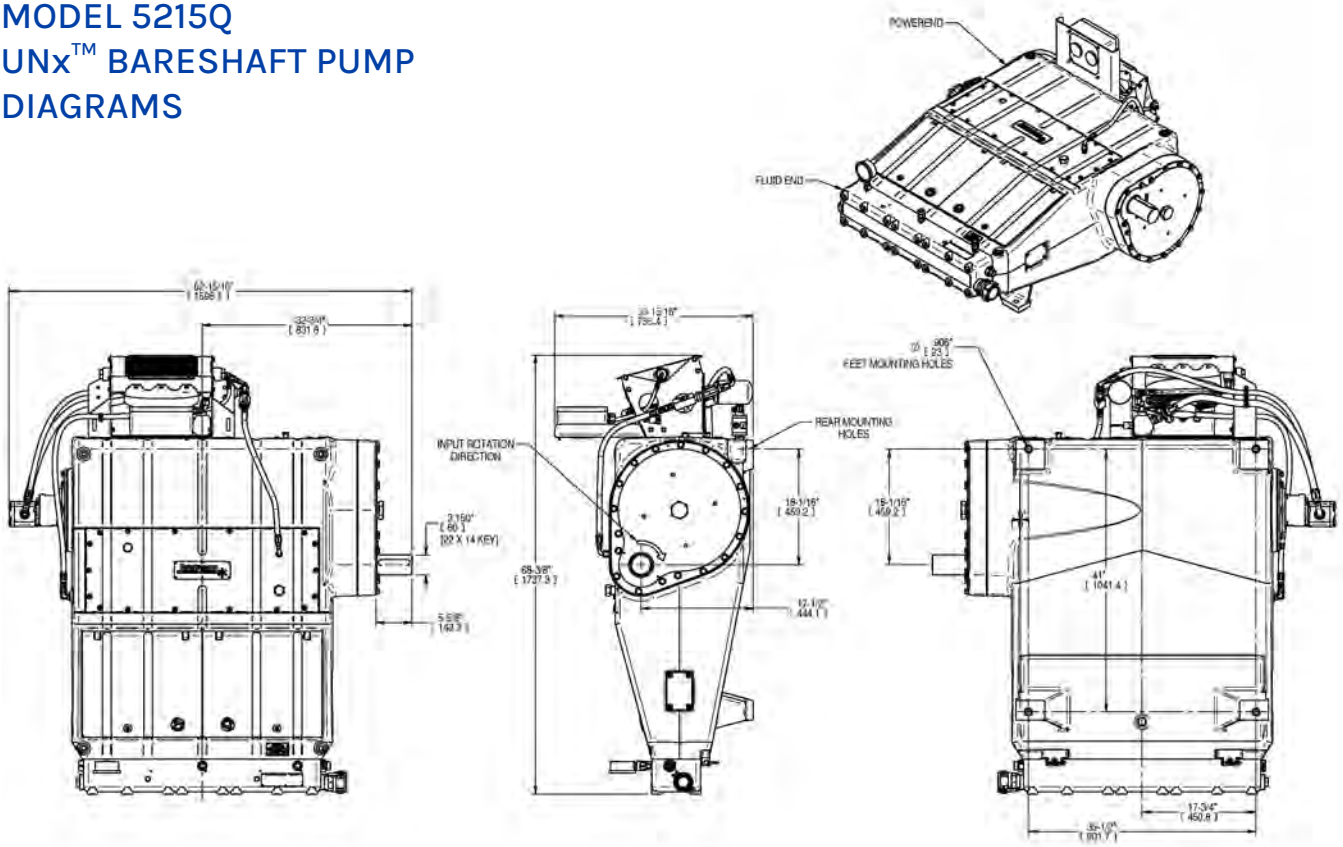

MODEL 5215Q
UNx™ BARESHAFT PUMP
PART BREAKDOWN

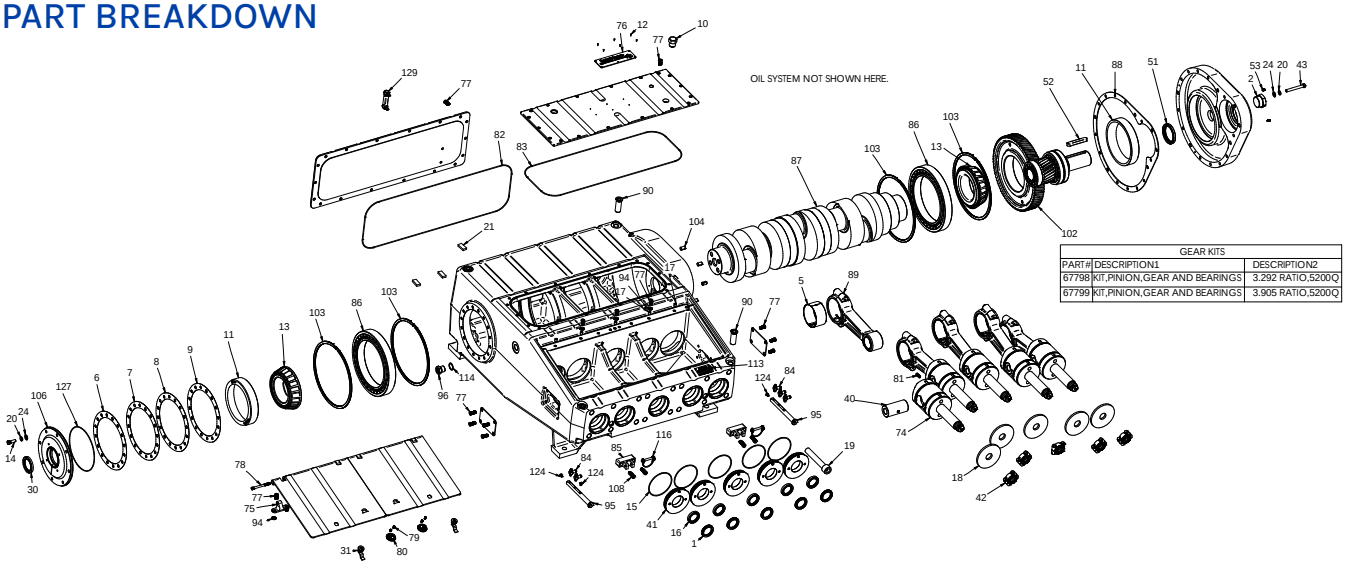

PART BREAKDOWN

ITEM	PART NO.	DESCRIPTION	ITEM	PART NO.	DESCRIPTION	ITEM	PART NO.	DESCRIPTION
1	04101	Oil Seal, Outboard	30	29623	Oil Seal Adapter	85	67687	Trunnion Block
2	08130	Plug	31	29829	Locking Pawl Latch	86	67735	Cylindrical Roller
5	26051	Journal Bearing	40	51534	Crosshead Pin	87	67752	Crankshaft
6	26259	Shim, End Cap, Yellow	41	51713	Oil Seal Plate	88	67753	Gasket
7	26259-1	Shim, End Cap, Brown	42	51736	Plunger Coupling	89	67757	Connecting Rod Assy
8	26259-2	Shim, End Cap, White	43	58422	Capscrew	90	67763	Lifting Adapter
9	26259-3	Shim, End Cap, Blue	51	59248	Oil Seal	94	67780	Washer
10	26360	Breather Cap	52	59260	Key	95	67781	Lube Line Adapter
11	26376	Bearing, Race	53	60350	Setscrew	96	67784	Oil Adapter
12	26379	Setscrew	74	67076	Crosshead Assy	102	See Table	Kit, Pinion Gear
13	26390	Bearing, Cone	75	67299	Hinge, Rod Box Cover	103	67804	Retaining Ring
14	26435	Capscrew	76	67305	Logo Plate	106	68910	Cap, Frame, Outboard
15	26479	O-Ring	77	67341	Capscrew, .5C x 1.0	108	69056	Capscrew
16	26481	Oil Seal, Inboard	78	67342	Capscrew, .38C x 4.5	113	69063	Identification Plate
17	26482	Setscrew	79	67343	Capscrew, #6-32 x .50	114	69066	Washer, M32
18	26487	Deflector	80	67345	Lift Handle	116	69068	Clevis Pin, Locking
19	26500	Capscrew	81	67348	Setscrew	124	69249	Plug
20	26558	Washer	82	67349	O-Ring	127	71017	O-Ring
21	26705	Magnet	83	67349	O-Ring	129	71318	Gauge, Oil Level
24	26798	Washer	84	67412	Needle Valve			

MODEL 5220Q
UNx™ BARESHAFT PUMP OIL COOLER
PART BREAKDOWN

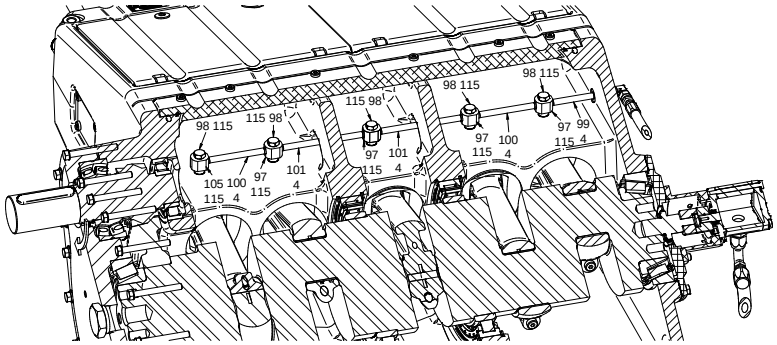

INTERNAL OIL DISTRIBUTION SYSTEM

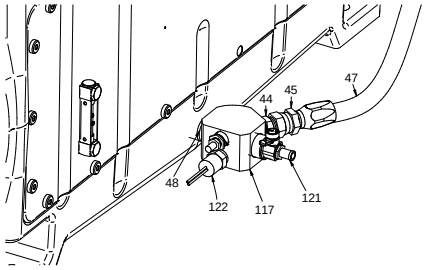

REAR PUMP OIL DRAIN ASSY

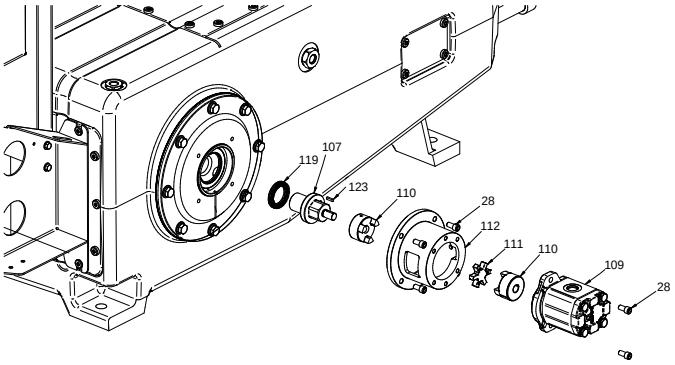

OIL PUMP ASSEMBLY

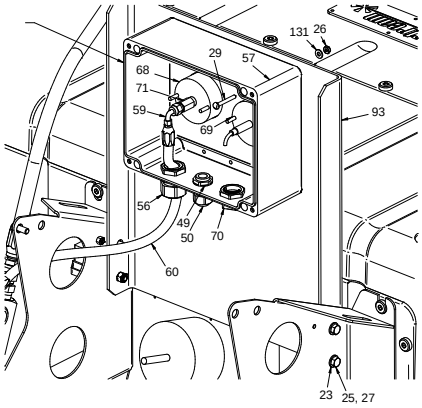

PRESSURE/TEMP GAUGE PANEL

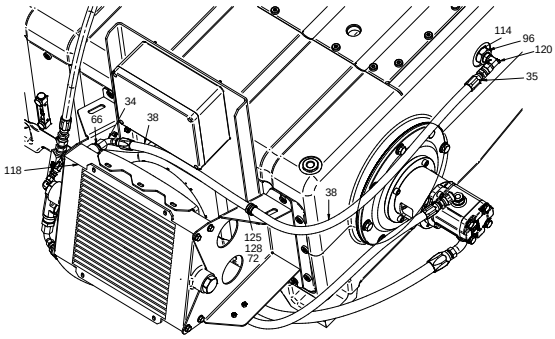

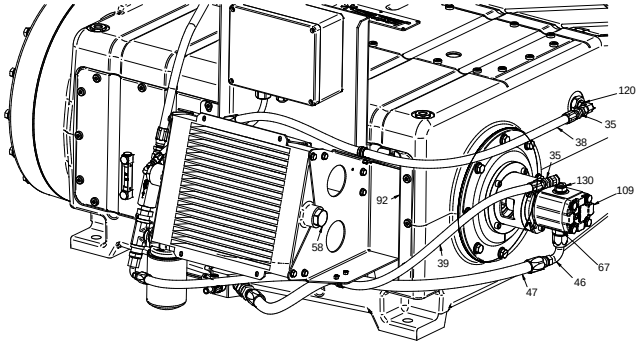

RELAY		
PART #	DESCRIPTION1	DESCRIPTION2
61075	RELAY,12VDC,SPDT,5 TERMINAL	30A NO/20A NC,WEATHERPROOF
66329	RELAY,24 VDC,SPDT,5 TERMINAL	20A NO/10A NC,WEATHERPROOF

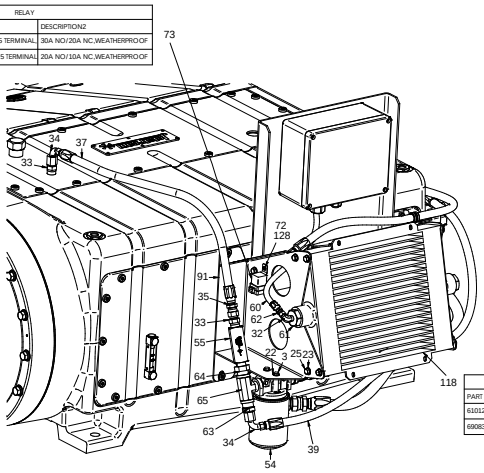

OIL COOLER		
PART #	DESCRIPTION1	DESCRIPTION2
61012	COOLER,OIL,AIR,FAN	12V,SAE #16 PORT
69083	COOLER,OIL,AIR,FAN	24V,SAE #16 PORT

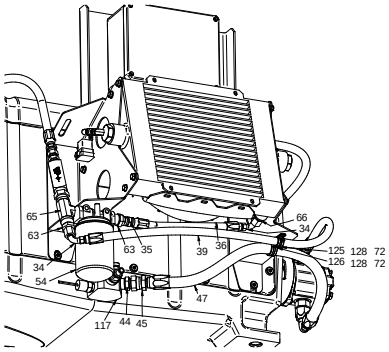

PART BREAKDOWN

ITEM	PART NO.	DESCRIPTION	ITEM	PART NO.	DESCRIPTION	ITEM	PART NO.	DESCRIPTION
3	25264	Capscrew	54	60663	Filter Assy	97	67785	Manifold, Banjo
4	25610	O-Ring	55	61011	Check Valve	98	67786	Bolt, Banjo
22	26709	Washer	56	61129	Cord Grip	99	67787	Oil Supply Tube, Side
23	26789	Washer	57	61152	Gauge w/ Enclosure	100	67788	Oil Supply Tube, Center
25	27250	Capscrew	58	61166	Plug	101	67789	Oil Supply Tube, Center
26	27449	Nut, Nylok	59	61167	Reusable Hose End	105	68007	Manifold End, Banjo
27	27698	Nut, Hex	60	61168	Fuel Hose	107	68911	Crank Adapter
28	27714	Capscrew	61	61169	Adapter	109	69057	Oil Pump
29	27876	Capscrew	62	61171	Reusable Hose End	110	69059	Hub Coupling
32	29831	Elbow	63	61173	Adapter	111	69060	Spider Coupling
33	29847	Adapter	64	61174	Adapter	112	69061	Pump Mount
34	29848	Reusable Hose End	65	61175	Tee	114	69066	Washer, M32
35	29851	Reusable Hose End	66	61178	Adapter	115	69067	Washer, M14
36	29906	Fuel Hose, 1 ft	67	61179	Adapter	117	69077	Oil Manifold
37	29906	Fuel Hose, 2.5 ft	68	62247	Switch, Pressure	118	See Table	Oil Cooler Fan
38	29906	Fuel Hose, 4 ft	69	62248	Switch, Temperature	119	69096	Lock Washer
39	29906	Fuel Hose, 4 ft	70	62252	Cable Gland, Split	120	69180	Fitting, 90°
44	58493	Adapter	71	62337	Adapter	121	69181	Drain Valve
45	58497	Reusable Hose End	72	63282	Nut, Loc	122	69184	Switch, Temperature
46	58498	Reusable Hose End	73	See Table	Relay	123	69200	Key
47	58499	Fuel Hose	91	67779-01	Oil Cooler Bracket, LH	125	69250	Loop Clamp, 3/4”
48	58547	Nipple	92	67779-02	Oil Cooler Bracket, RH	128	71066	Capscrew
49	58576	Locknut	93	67779-03	Bracket, Oil Gauges	130	71502	Adapter
50	58577	Connector Cord	96	67784	Oil Adapter	131	J70804	Washer

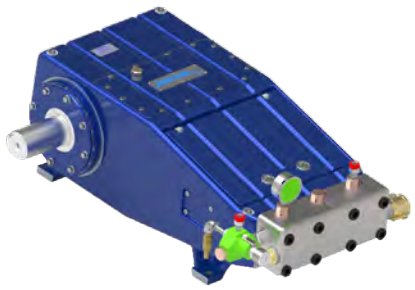

MODEL 5215

UNX™ BARESHAFT PUMP

The Jetstream model 5215 waterblast pump is capable of power input of up to 400 horsepower (298 kW). It is the most advanced and efficient compact waterblast pump in the industry. Combining the strength and durability of a proven power end workhorse with the unparalleled simplicity, serviceability and versatility of the UNx fluid end design, Jetstream bareshaft pumps are the best choice for those building their own system or replacing a complicated, worn, or unreliable pump.

- Up to 400 horsepower (298 kW)
- Three plunger (triplex) design

KEY FEATURES

- Ductile iron power frame is the strongest in the industry
- Crankshaft machined from high-tech forged alloy for superior performance at higher power input
- Largest bearings of any comparable pump on the market
- Maximum Flow: 40.0 gpm (151 lpm) at 15,000 psi (1034 bar)
  49.5 gpm (187 lpm) at 12,500 psi (861 bar)
  62.1 gpm (235 lpm) at 10,000 psi (689 bar)

POWER END SPECS

PLUNGERS			CONNECTION TYPE (DISCHARGE)	PUMP SPEED RANGE	MAX. POWER INPUT		MAX. FRAME LOAD		TOTAL WEIGHT		PUMP OIL*		
#	STROKE										TYPE	CAPACITY	
	in	mm		RPM	hp	kW	lb	kN	lb	kg		gal	l
3	5.25	133	Jetstream HF	183-518	400	300	17,750	79	2100	954	80W-90	9	34

* See manual for list of approved oils.

FLUID END SPECS

PUMP AY PART NO.*	PLUNGER SIZE			MAX. POWER INPUT		PUMP DISPLACEMENT AT SPECIFIED PUMP SPEEDS**												MAX. OPERATING PRESSURE	
	NO.	DIAMETER				183 RPM		200 RPM		300 RPM		400 RPM		500 RPM		518 RPM			
		in	mm	hp	kW	gpm	lpm	gpm	lpm	gpm	lpm	gpm	lpm	gpm	lpm	gpm	lpm	psi	bar
67354	11	1.100	27.94	325	242	11.2	42	13.0	49	19.4	73	25.9	98	32.4	122	33.6	127	15,000	1034
67355	12	1.200	30.48	387	288	13.3	50	15.4	58	23.1	87	30.9	117	38.6	146	40.0	151		
67356	13	1.335	33.91	400	300	16.5	62	19.1	72	28.6	108	38.2	145	47.7	181	49.5	187	12,500	861
67357	15	1.500	38.10	400	300	20.9	79	24.1	91	36.2	137	48.2	183	60.3	228	62.1	235	10,000	689

** Flow values represented refer to "theoretical" flow, neglecting inefficiency resulting from compressibility of water and expansion of pressure bearing components.

MODEL 5215 UNx™ BARESHAFT PUMP DIAGRAMS

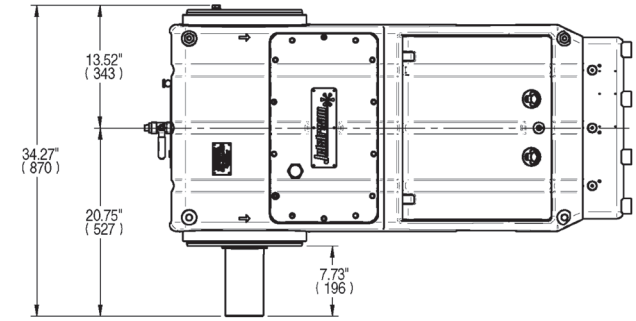

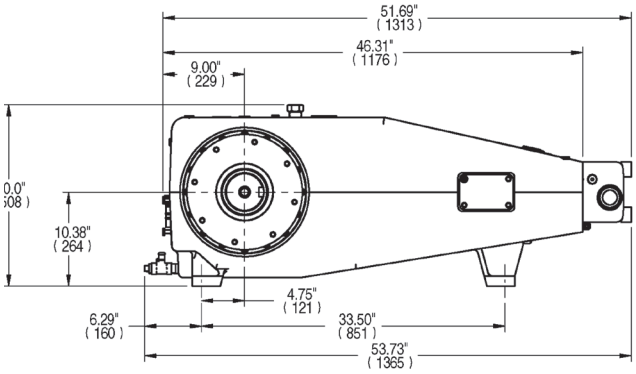

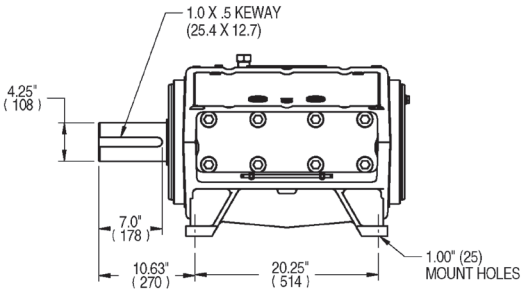

GEAR DRIVE

An optional fan-cooled Gear Drive can be added to the 5215 Bareshaft Pump. Several options are available, as well as the specific clocking position needed. Contact your Jetstream Sales Manager for more information.

PART NO.	DRIVE RATIO	MAX. INPUT SPEED
	12V	
59100-16-69-12V	4.31:1	2230 RPM
59100-17-68-12V	4.00:1	2070 RPM
59100-19-67-12V	3.53:1	1825 RPM
59100-22-64-12V	2.91:1	1500 RPM
	24V	
59100-16-69-24V	4.31:1	2230 RPM
59100-17-68-24V	4.00:1	2070 RPM
59100-19-67-24V	3.53:1	1825 RPM
59100-22-64-24V	2.91:1	1500 RPM

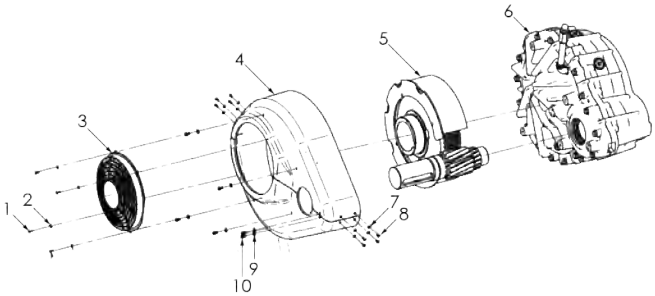

PART BREAKDOWN

ITEM	PART NO.	DESCRIPTION	ITEM	PART NO.	DESCRIPTION
1	65082	Screw	6	59101	Gear Drive Kit Common Parts
2	57244	Washer	7	57244	Washer
3	Various	Fan	8	65082	Screw
4	64883	Fan Shroud	9	70206	Washer
5	Various	Gear Drive Kit, dependent on gear ratio and voltage	10	63790	Capscrew

MODEL 5215
UNx™ BARESHAFT PUMP
PART BREAKDOWN

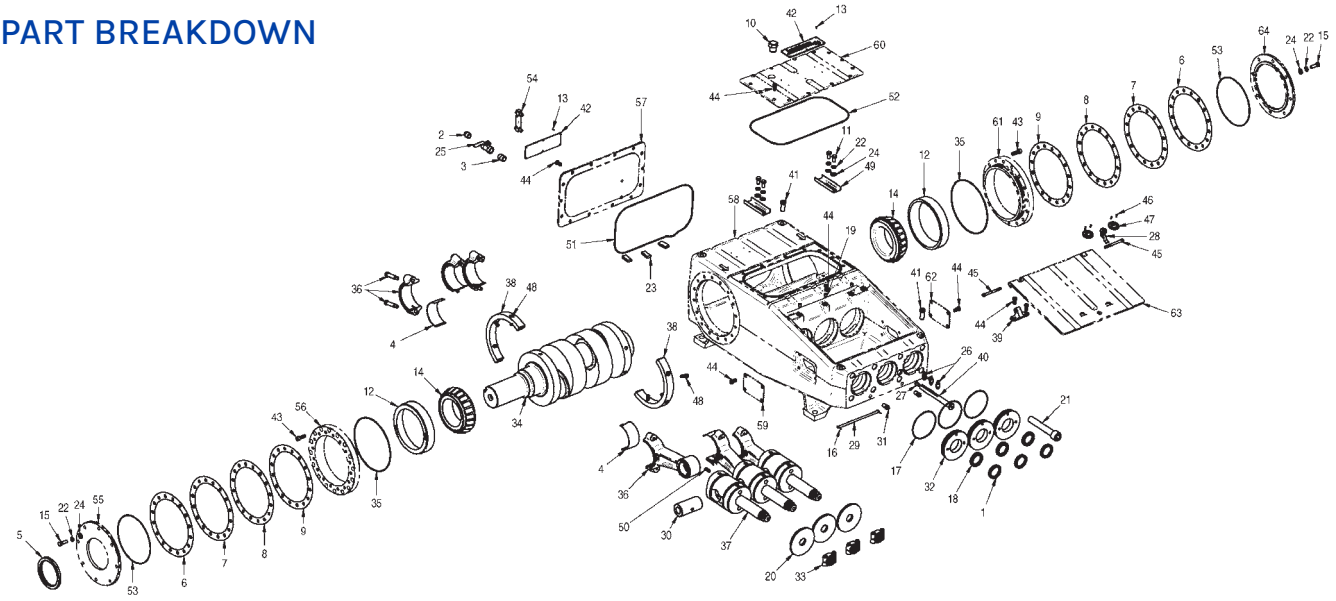

ITEM	PART NO.	DESCRIPTION	ITEM	PART NO.	DESCRIPTION	ITEM	PART NO.	DESCRIPTION
1	04101	Oil Seal, Outboard	23	26705	Magnet	45	67342	Capscrew, .38C x 4.5
2	25928	Plug	24	26798	Washer	46	67343	Capscrew, #6-32 x .50
3	25946	Nipple	25	27101	Ball Valve	47	67345	Lift Handle
4	26051	Journal Bearing	26	67412	Needle Valve	48	67346	Capscrew, .5F x 1 3/8"
5	26208	Crankshaft Seal	27	25120	Plug	49	67347	Oil Trough
6	26259	Shim, End Cap, Yellow	28	29829	Locking Pawl Latch	50	67348	Setscrew
7	26259-1	Shim, End Cap, Brown	29	50295	Trunnion Rod	51	67349	O-Ring
8	26259-2	Shim, End Cap, White	30	51534	Crosshead Pin	52	67349	O-Ring
9	26259-3	Shim, End Cap, Blue	31	51659	Trunnion	53	71017	O-Ring
10	26360	Breather Cap	32	51713	Oil Seal Plate	54	71318	Gauge, Oil Level, 3.5"
11	26361	Capscrew	33	51736	Plunger Coupling	55	51538	Cap, Frame, Inboard
12	26376	Bearing, Race	34	66087	Crankshaft	56	66089	Bearing Adapter
13	26379	Setscrew	35	66112	O-Ring	57	67613	Rear Cover
14	26390	Bearing, Cone	36	66964	Connecting Rod Assy	58	66961	Power Frame
15	26435	Capscrew	37	67076	Crosshead Assy	59	67298	Side Access Plate
16	26468	Cotter Pin	38	67078	Weight, Narrow	60	67588	Top Cover
17	26479	O-Ring	39	67299	Hinge, Rod Box Cover	61	66089	Bearing Adapter
18	26481	Oil Seal, Inboard	40	67781	Lube Line Adapter	62	67298	Side Access Plate
19	26482	Setscrew	41	67301	Lifting Adapter	63	67614	Rod Box Cover
20	26487	Deflector	42	67305	Logo Plate	64	51536	Cap, Frame, Outboard
21	26500	Capscrew	43	67340	Capscrew, .5C x 1.5			
22	26558	Washer	44	67341	Capscrew, .5C x 1.0			

MODEL 4215HF

UNX™ BARESHAFT PUMP

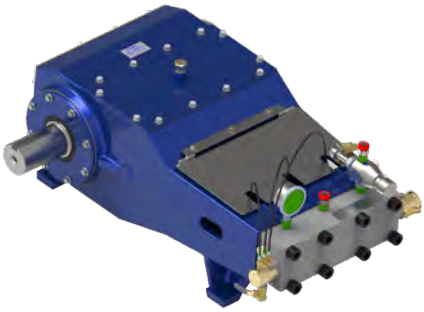

The Jetstream model 4215HF waterblast pump is capable of power input of 200 to 325 horsepower (242 kW). It is the most advanced and efficient waterblast pump of its size in the industry. Combining the strength and durability of a proven power end workhorse with the unparalleled simplicity, serviceability and versatility of the UNx fluid end design, Jetstream bareshaft pumps are the best choice for those building their own system or replacing a complicated, worn or unreliable pump.

- 200 to 325 horsepower (149 to 242 kW)
- Three Plunger (triplex)

KEY FEATURES

- Ductile iron power frame is the strongest in the industry
- Crankshaft machined from high-tech forged alloy for superior performance at higher power input
- Largest bearings of any comparable pump on the market
- Maximum Flow: 32.3 gpm (122 lpm) at 15,000 psi (1034 bar)
  40.0 gpm (151 lpm) at 12,500 psi (861 bar)
  50.5 gpm (191 lpm) at 10,000 psi (689 bar)
  62.6 gpm (237 lpm) at 8,000 psi (551 bar)
  73.5 gpm (278 lpm) at 6,800 psi (469 bar)

POWER END SPECS

PLUNGERS			CONNECTION TYPES*		PUMP SPEED RANGE	MAX. POWER INPUT		MAX. FRAME LOAD		TOTAL WEIGHT		PUMP OIL CAPACITY	
#	STROKE		DISCHARGE PORTS	TOP PORTS (ACCESSORY)									
	in	mm			RPM	hp	kW	lb	kN	lb	kg	gal	l
3	4.25	108	3/4" NPT Female	1/2" NPT Female	173-518	325	242	17,750	79	1,800	820	9	34

*See details on all connection types in Section I.

FLUID END SPECS

PUMP AY PART NO.*	PLUNGER SIZE			MAX. POWER INPUT		PUMP DISPLACEMENT AT SPECIFIED PUMP SPEEDS**												MAX. OPERATING PRESSURE	
	NO.	DIAMETER				173 RPM		200 RPM		300 RPM		400 RPM		500 RPM		518 RPM			
		in	mm	hp	kW	gpm	lpm	gpm	lpm	gpm	lpm	gpm	lpm	gpm	lpm	gpm	lpm	psi	bar
52130	10	.980	24.89	210	157	7.2	27	8.3	32	12.5	47	16.7	63	20.8	79	21.6	82	15,000	1034
52135	11	1.100	27.94	260	194	9.0	34	10.5	40	15.7	60	21.0	79	26.2	99	27.2	102		
55095	12	1.200	30.48	325	242	10.8	41	12.5	47	18.7	71	25.0	95	31.2	118	32.3	122		
55090	13	1.335	33.91	325	242	13.3	50	15.5	59	23.2	88	30.9	117	38.6	146	40.0	151	12,500	961
55085	15	1.500	38.10	325	242	16.8	63	19.5	74	29.3	111	39.0	148	48.8	185	50.5	191	10,000	689
55080	16	1.670	42.42	325	242	20.9	79	24.2	92	36.3	137	48.4	183	60.5	229	62.6	237	8.000	551
63794	18	1.810	45.97	325	242	24.5	93	28.4	108	42.5	161	56.7	215	70.9	268	73.5	278	6,800	469

** Flow values represented refer to "theoretical" flow, neglecting inefficiency resulting from compressibility of water and expansion of pressure bearing components.

MODEL 4215HF UNx™ BARESHAFT PUMP DIAGRAMS

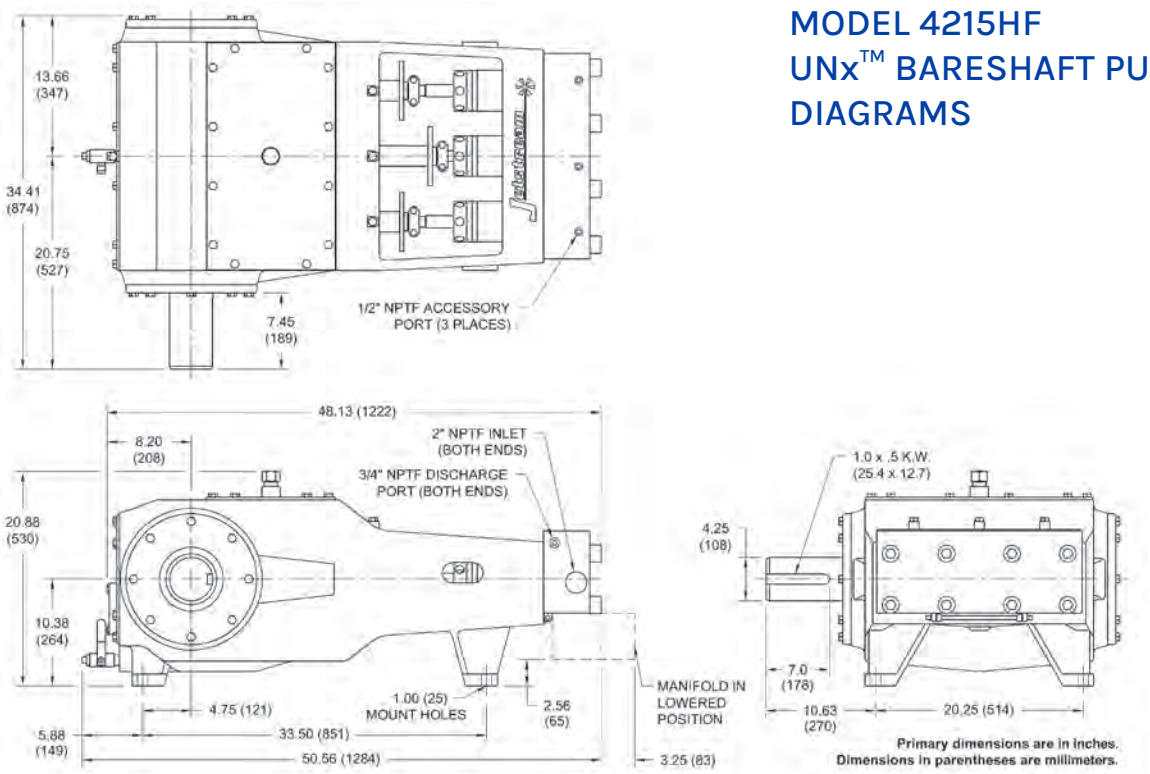

GEAR DRIVE

An optional fan-cooled Gear Drive can be added to the 4215HF Bareshaft Pump. Several options are available, as well as the specific clocking position needed. Contact your Jetstream Sales Manager for more information.

PART NO.	DRIVE RATIO	MAX. INPUT SPEED
	12V	
59100-16-69-12V	4.31:1	2230 RPM
59100-17-68-12V	4.00:1	2070 RPM
59100-19-67-12V	3.53:1	1825 RPM
59100-22-64-12V	2.91:1	1500 RPM
	24V	
59100-16-69-24V	4.31:1	2230 RPM
59100-17-68-24V	4.00:1	2070 RPM
59100-19-67-24V	3.53:1	1825 RPM
59100-22-64-24V	2.91:1	1500 RPM

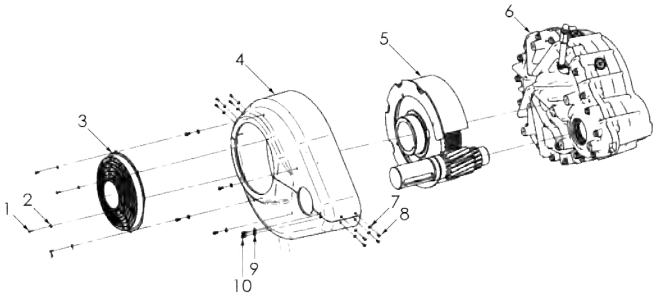

PART BREAKDOWN

ITEM	PART NO.	DESCRIPTION
1	65082	Screw
2	57244	Washer
3	Various	Fan
4	64883	Fan Shroud
5	Various	Gear Drive Kit, dependent on gear ratio and voltage
6	59101	Gear Drive Kit Common Parts
7	57244	Washer
8	65082	Screw
9	70206	Washer
10	63790	Capscrew

MODEL 4215HF UNx™ BARESHAFT PUMP PART BREAKDOWN

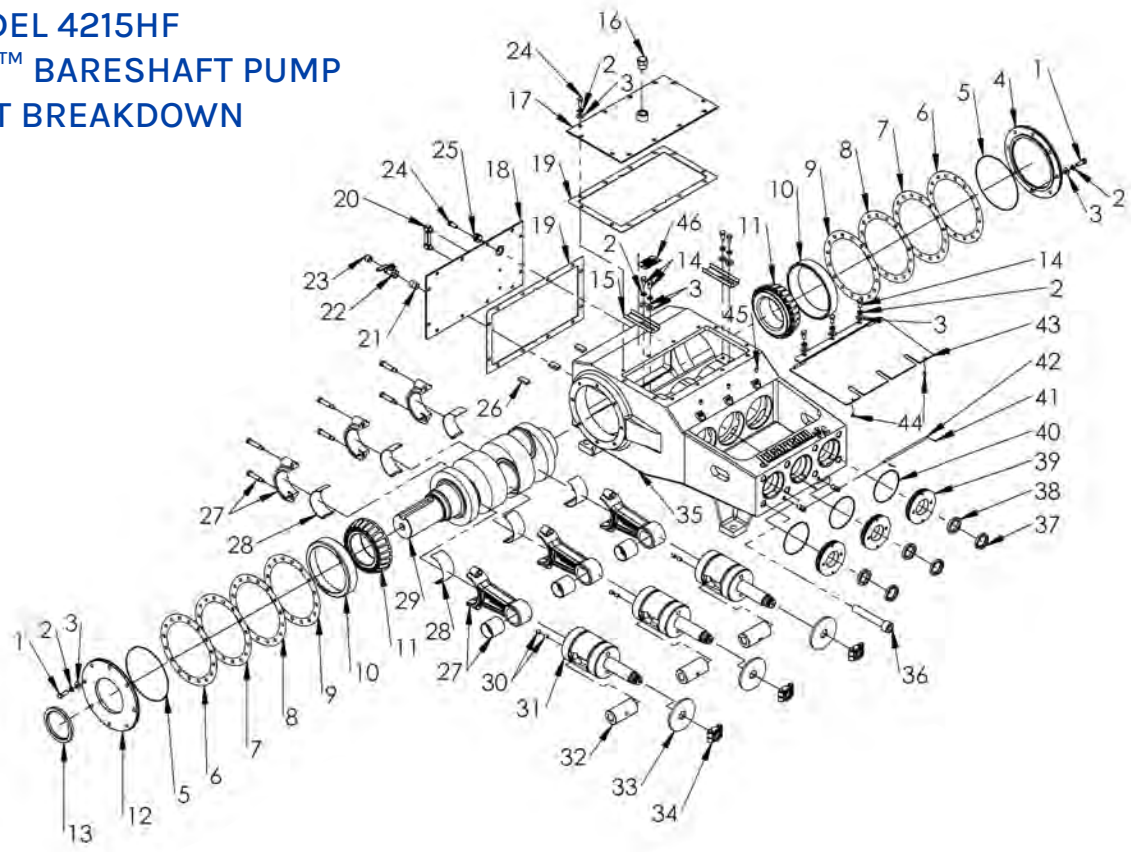

ITEM	PART NO.	DESCRIPTION	ITEM	PART NO.	DESCRIPTION	ITEM	PART NO.	DESCRIPTION
1	26435	Capscrew	18	55253	Plate, Back Cover	34	51736	Plunger Coupling
2	26558	Washer	19	26195	Gasket, Cover Plate	35	51421	Power Frame
3	26798	Washer	20	71318	Gauge, Oil Level, 3.5"	36	26500	Capscrew
4	51536	Cap, Frame, Outboard		28062	Gauge, Oil Level, 4"	37	04101	Oil Seal, Outboard
5	71017	O-Ring	21	25946	Nipple	38	26481	Oil Seal, Inboard
6	26259	Shim, End Cap, Yellow	22	27101	Ball Valve	39	51713	Oil Seal Plate
7	26259-1	Shim, End Cap, Brown	23	25928	Plug	40	26479	O-Ring
8	26259-2	Shim, End Cap, White	24	26491	Capscrew	41	26468	Cotter Pin
9	26259-3	Shim, End Cap, Blue	25	29738	Plug	42	50295	Trunnion Rod
10	26376	Bearing, Race	26	26705	Magnet	43	61721	Cover, Rod Box
11	26390	Bearing, Cone	27	51487	Connecting Rod Assy	44	27592	Rubber Stopper
12	51538	Cap, Frame, Inboard	28	26051	Journal Bearing	45	26482	Setscrew
13	26208	Crankshaft Seal	29	28826	Crankshaft	46	26590	Caution Plate
14	26361	Capscrew	30	26369	Setscrew	47*	51659	Trunnion
15	26484	Oil Trough	31	51731	Crosshead	48*	26379	Setscrew
16	26360	Breather Cap	32	51534	Crosshead Pin	49*	56949	Puller, Oil Seal Plate
17	51279	Plate, Top Cover	33	26487	Deflector	50*	71147	Warning Decals, Pump Only

* Not shown

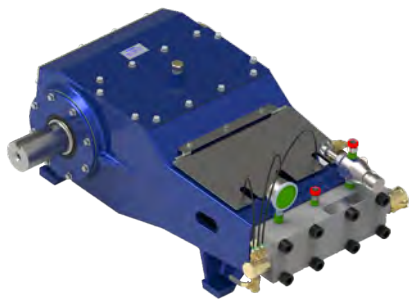

MODEL 3615HF

UNX™ BARESHAFT PUMP

The Jetstream model 3615HF waterblast pump is capable of power input of up to 270 horsepower (201 kW). It is the most advanced and efficient medium horsepower waterblast pump in the industry. Combining the strength and durability of a proven power end workhorse with the unparalleled simplicity, serviceability and versatility of the UNx fluid end design, Jetstream bareshaft pumps are the best choice for those building their own system or replacing a complicated, worn or unreliable pump.

- Three Plunger (triplex) design
- Up to 270 horsepower (201 kW)
- Maximum Flow: 19.4 gpm (73 lpm) at 15,000 psi (1034 bar)
  24.4 gpm (93 lpm at 12,000 psi (827 bar)
  29.1 gpm (110 lpm) at 10,000 psi (689 bar)
  36.0 gpm (136 lpm) at 8,000 psi (551 bar)
  36.0 gpm (136 lpm) at 6,500 psi (448 bar)
  45.5 gpm (172 lpm) at 6,000 psi (413 bar)
  45.5 gpm (172 lpm) at 5,000 psi (344 bar)
  66.2 gpm (251 lpm) at 4,500 psi (310 bar)
  66.2 gpm (251 lpm) at 4,000 psi (276 bar)

POWER END SPECS (POWER END ONLY P/N 60209-XX)

PLUNGERS			CONNECTION TYPES*		PUMP SPEED RANGE	MAX. POWER INPUT		MAX. FRAME LOAD		TOTAL WEIGHT		OIL TYPE	PUMP OIL CAPACITY	
#	STROKE		DISCHARGE PORTS	TOP PORTS (ACCESSORY)										
	in	mm			RPM	hp	kW	lb	kN	lb	kg		gal	l
3	3.60	92	3/4" NPT Female	1/2" NPT Female	183-550	270	201	17,750	79	1.720	780	80W-90	9	34

*See details on all connection types in Section I.

FLUID END SPECS

PUMP AY PART NO.	PLUNGER SIZE			MAX. POWER INPUT		PUMP DISPLACEMENT AT SPECIFIED PUMP SPEEDS*												MAX. OPERATING PRESSURE	
	NO.	DIAMETER				183 RPM		200 RPM		300 RPM		400 RPM		500 RPM		518 RPM			
		in	mm	hp	kW	gpm	lpm	gpm	lpm	gpm	lpm	gpm	lpm	gpm	lpm	gpm	lpm	psi	bar
52575	9	.900	22.86	150	112	5.4	21	6.0	23	8.9	34	11.9	45	14.9	56	15.4	58	15,000	1034
52570	10	.980	24.89	190	142	6.5	24	7.1	27	10.6	40	14.1	53	17.6	67	18.3	69	15,000	1034
				170	127													13,500	931
				150	112													12,000	827
52565	11	1.100	27.94	230	172	8.1	31	8.9	34	13.3	50	17.8	67	22.2	84	23.0	87	15,000	1034
				190	142													12,000	827
				170	127													11,000	758
				150	112													10,000	689
52560	12	1.200	30.48	270	201	9.7	37	10.6	40	15.9	60	21.2	80	26.4	100	27.4	104	15,000	1034
				190	142													10,000	689
				170	127													9,000	620
				150	112													8,000	551
52555	13	1.335	33.91	270	201	12.0	45	13.1	50	19.6	74	26.2	99	32.7	124	33.9	128	12,500	862
				190	142													8,000	551
				170	127													7,500	517
				150	112													6,500	448
52550	15	1.500	38.10	270	201	15.1	57	16.5	63	24.8	94	33.1	125	41.3	156	42.8	162	10,000	689
				190	142													6,500	448
				170	127													6,000	413
				150	112													5,000	344
62756	16	1.670	42.42	270	201	18.7	71	20.5	78	30.7	116	41.0	155	51.2	194	53.1	201	8,000	551
				190	142													5,000	344
				170	127													4,500	310
				150	112													4,000	276
63794	18	1.800	45.72	270	201	22.0	83	24.1	91	36.1	137	48.1	182	60.2	228	62.3	236	6,800	469
				190	142													4,500	310
				170	127													4,000	276
				150	112													3,500	241

*Flow values represented refer to "theoretical" flow, neglecting inefficiency resulting from compressibility of water and expansion of pressure bearing components.

MODEL 3615HF UNx™ BARESHAFT PUMP DIAGRAMS

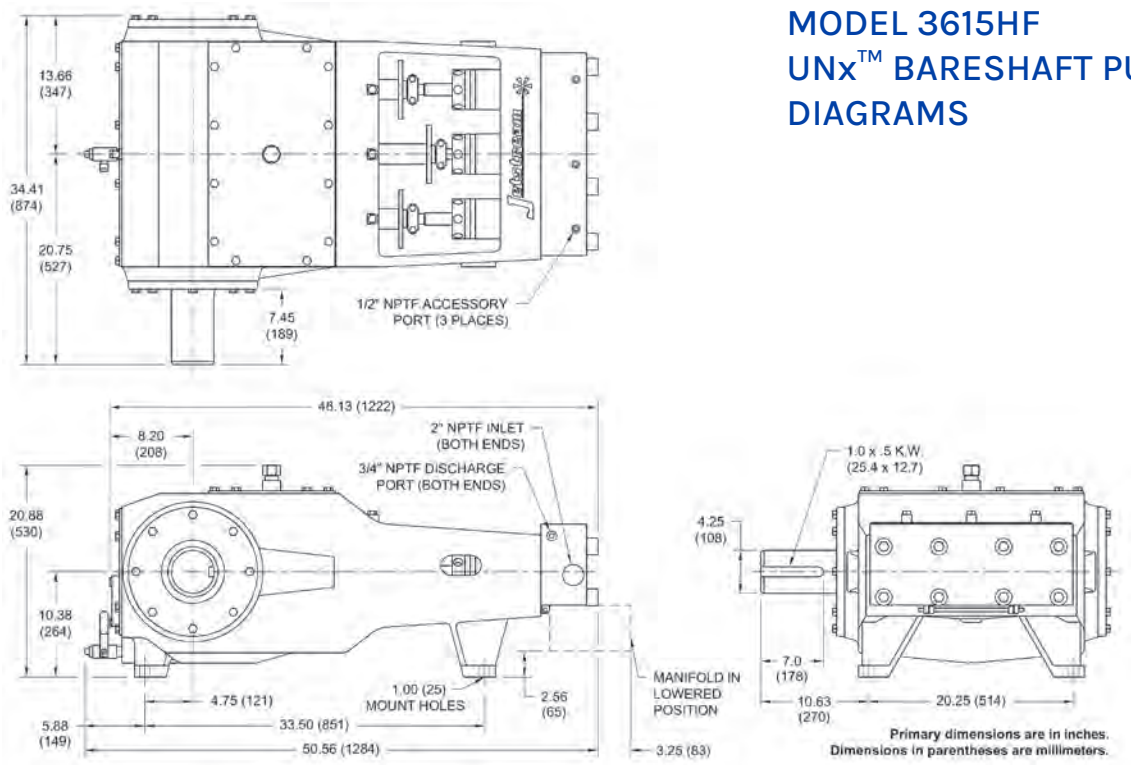

GEAR DRIVE

An optional fan-cooled Gear Drive can be added to the 3615HF Bareshaft Pump. Several options are available, as well as the specific clocking position needed. Contact your Jetstream Sales Manager for more information.

PART NO.	DRIVE RATIO	MAX. INPUT SPEED
	12V	
59100-16-69-12V	4.31:1	2230 RPM
59100-17-68-12V	4.00:1	2070 RPM
59100-19-67-12V	3.53:1	1825 RPM
59100-22-64-12V	2.91:1	1500 RPM
	24V	
59100-16-69-24V	4.31:1	2230 RPM
59100-17-68-24V	4.00:1	2070 RPM
59100-19-67-24V	3.53:1	1825 RPM
59100-22-64-24V	2.91:1	1500 RPM

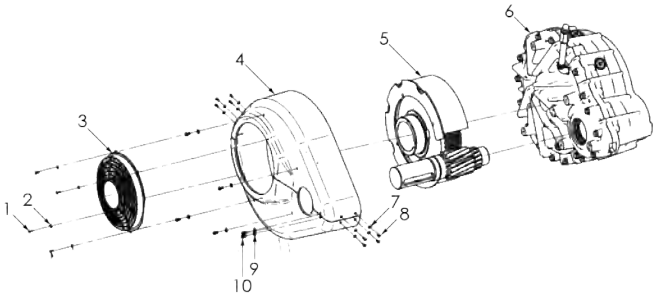

PART BREAKDOWN

ITEM	PART NO.	DESCRIPTION
1	65082	Screw
2	57244	Washer
3	Various	Fan
4	64883	Fan Shroud
5	Various	Gear Drive Kit, dependent on gear ratio and voltage
6	59101	Gear Drive Kit Common Parts
7	57244	Washer
8	65082	Screw
9	70206	Washer
10	63790	Capscrew

MODEL 3615HF UNx™ BARESHAFT PUMP PART BREAKDOWN

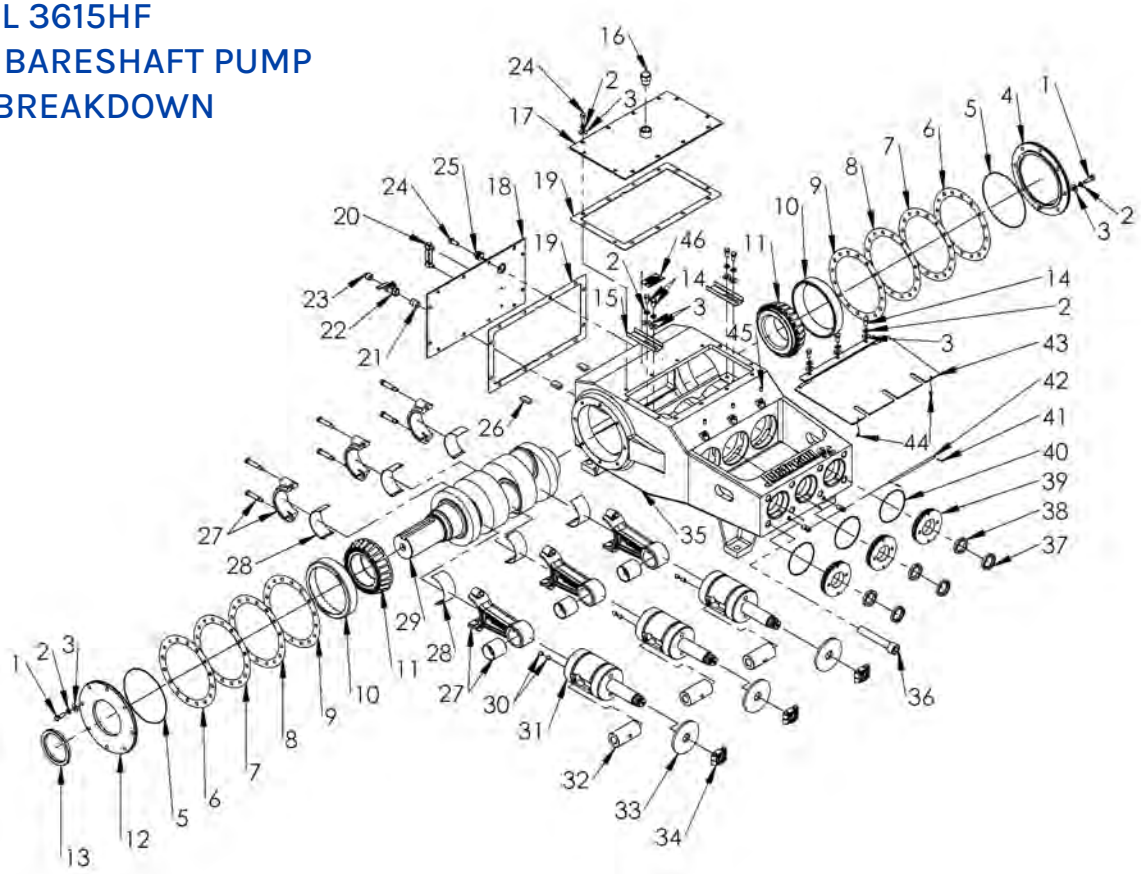

ITEM	PART NO.	DESCRIPTION	ITEM	PART NO.	DESCRIPTION	ITEM	PART NO.	DESCRIPTION
1	26435	Capscrew	18	55253	Plate, Back Cover	34	51736	Plunger Coupling
2	26558	Washer	19	26195	Gasket, Cover Plate	35	51421	Power Frame
3	26798	Washer	20	71318	Gauge, Oil Level, 3.5"	36	26500	Capscrew
4	51536	Cap, Frame, Outboard		28062	Gauge, Oil Level, 4"	37	04101	Oil Seal, Outboard
5	71017	O-Ring	21	25946	Nipple	38	26481	Oil Seal, Inboard
6	26259	Shim, End Cap, Yellow	22	27101	Ball Valve	39	51713	Oil Seal Plate
7	26259-1	Shim, End Cap, Brown	23	25928	Plug	40	26479	O-Ring
8	26259-2	Shim, End Cap, White	24	26491	Capscrew	41	26468	Cotter Pin
9	26259-3	Shim, End Cap, Blue	25	29738	Plug	42	50295	Trunnion Rod
10	26376	Bearing, Race	26	26705	Magnet	43	61721	Cover, Rod Box
11	26390	Bearing, Cone	27	51487	Connecting Rod Assy	44	27592	Rubber Stopper
12	51538	Cap, Frame, Inboard	28	26051	Journal Bearing	45	26482	Setscrew
13	26208	Crankshaft Seal	29	53600	Crankshaft	46	26590	Caution Plate
14	26361	Capscrew	30	26369	Setscrew	47*	51659	Trunnion
15	26484	Oil Trough	31	51731	Crosshead	48*	26379	Setscrew
16	26360	Breather Cap	32	51534	Crosshead Pin	49*	56949	Puller, Oil Seal Plate
17	51279	Plate, Top Cover	33	26487	Deflector			

* Not shown

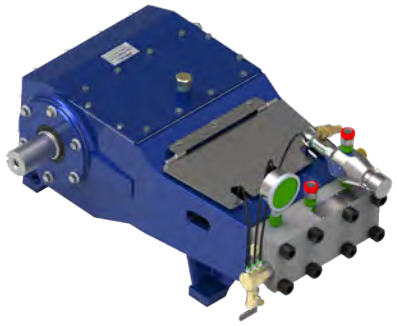

MODEL 3015

UNX™ BARESHAFT PUMP

The Jetstream model 3015 waterblast pump is capable of power input of up to 200 horsepower (149 kW). It is the most advanced and efficient compact waterblast pump in the industry. Combining the strength and durability of a proven power end workhorse with the unparalleled simplicity, serviceability and versatility of the UNx fluid end design, Jetstream bareshaft pumps are the best choice for those building their own system or replacing a complicated, worn or unreliable pump.

- Up to 200 horsepower (149 kW)
- Three Plunger (triplex) design

KEY FEATURES

- Ductile iron power frame is the strongest in the industry
- Largest bearings of any comparable pump on the market
- Maximum Flow: 18.4 gpm (70 lpm) at 15,000 psi (1034 bar)
  23.2 gpm (88 lpm) at 10,000 psi (689 bar)

POWER END SPECS

PLUNGERS			CONNECTION TYPES*		PUMP SPEED RANGE	MAX. POWER INPUT		MAX. FRAME LOAD		TOTAL WEIGHT		OIL TYPE	PUMP OIL CAPACITY	
#	STROKE		DISCHARGE PORTS	TOP PORTS (ACCESSORY)										
	in	mm			RPM	hp	kW	lb	kN	lb	kg		gal	l
3	3.00	76	1/2" NPT Female	1/2" NPT Female	200-600	200	149	13,000	57	970	440	80W-90	5	19

*See details on all connection types in Section I.

FLUID END SPECS

PUMP AY PART NO.*	PLUNGER SIZE			MAX. POWER INPUT		PUMP DISPLACEMENT AT SPECIFIED PUMP SPEEDS**										MAX. OPERATING PRESSURE	
	NO.	DIAMETER				200 RPM		300 RPM		400 RPM		500 RPM		600 RPM			
		in	mm	hp	kW	gpm	lpm	gpm	lpm	gpm	lpm	gpm	lpm	gpm	lpm	psi	bar
51760	7	.735	18.67	96	67	3.3	13	5.0	19	6.6	25	8.3	31	9.9	37	15,000	1034
51765	8	.800	20.32	114	82	3.9	15	5.9	22	7.8	30	9.8	37	11.8	44	15,000	1034
				96	67											12,000	827
51770	9	.900	22.86	150	112	5.0	19	7.4	28	9.9	38	12.4	47	14.9	56	15,000	1034
				125	93											12,500	861
				90	67											10,000	689
51775	10	1.000	25.40	200	149	6.1	23	9.2	35	12.2	46	15.3	58	18.4	70	15,000	1034
				150	112											13,000	896
				125	93											10,000	689
				90	67											8,000	551
68638	10HF	1.062	26.97	200	149	6.9	26	10.4	39	13.8	52	17.2	65	20.7	78	15,000	1034
52275	11	1.125	28.58	200	149	7.7	29	11.6	44	15.5	59	19.4	73	23.2	88	13,000	896
				150	112											10,000	689
				125	93											8,000	551
				100	75											6,500	448

** Flow values represented refer to "theoretical" flow, neglecting inefficiency resulting from compressibility of water and expansion of pressure bearing components..

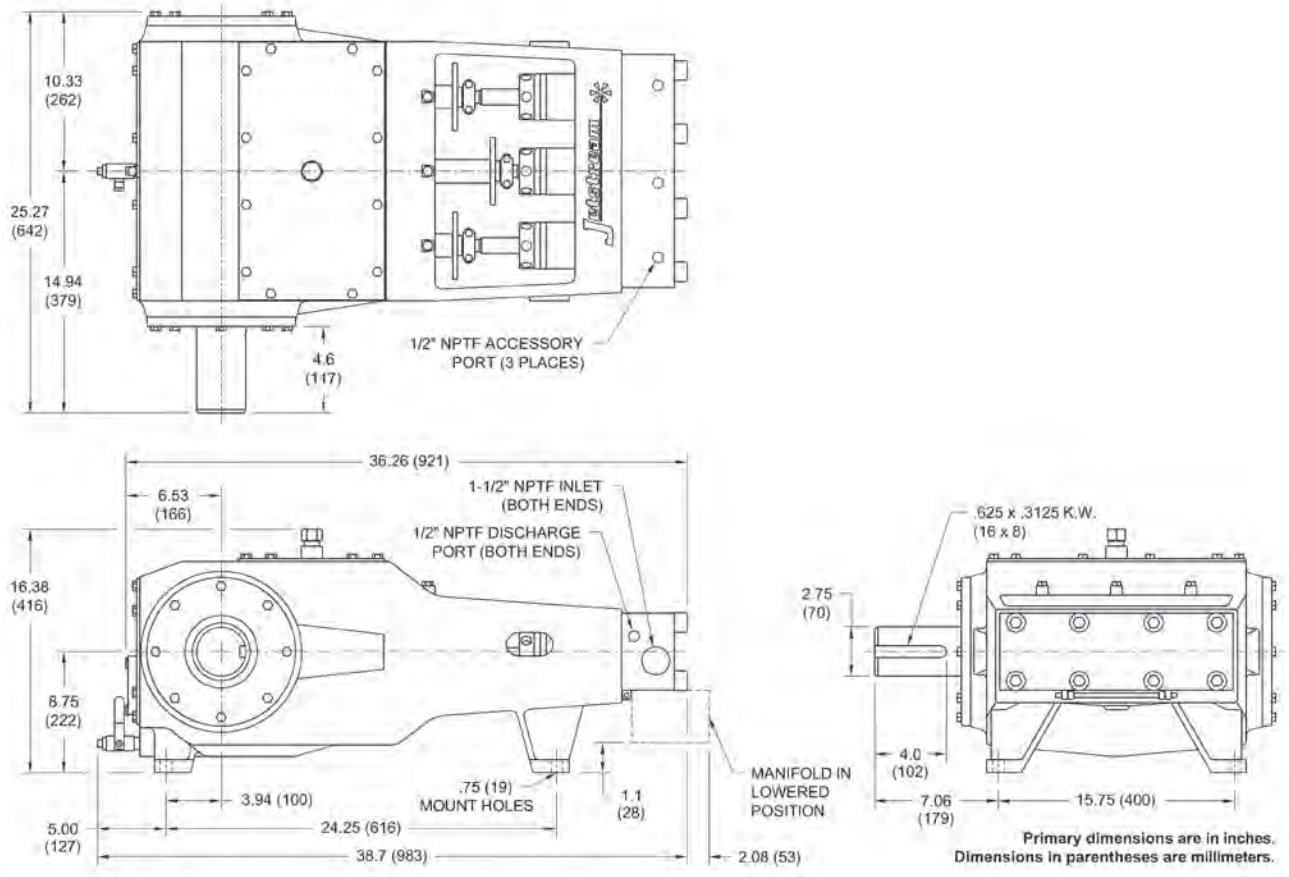

GEAR DRIVE

An optional Gear Drive can be added to the 3015 Bareshaft Pump. Several options are available, as well as the specific clocking position needed. Contact your Jetstream Sales Manager for more information.

PART NO.	DRIVE RATIO	MAX. INPUT SPEED
MODELS WITHOUT COOLING COIL (≤150 HP)		
58501-17-68	4.00:1	2400 RPM
58501-18-66	3.67:1	2200 RPM
58501-21-63	3.00:1	1800 RPM
58501-24-60	2.50:1	1500 RPM
MODELS WITH COOLING COIL (200 HP)*		
68453-17-68	4.00:1	2400 RPM
68453-18-66	3.67:1	2200 RPM
68453-21-63	3.00:1	1800 RPM
68453-24-60	2.50:1	1500 RPM

* Cooling coil recommended for high temperature applications.

MODEL 3015
UNx™ BARESHAFT PUMP
PART BREAKDOWN

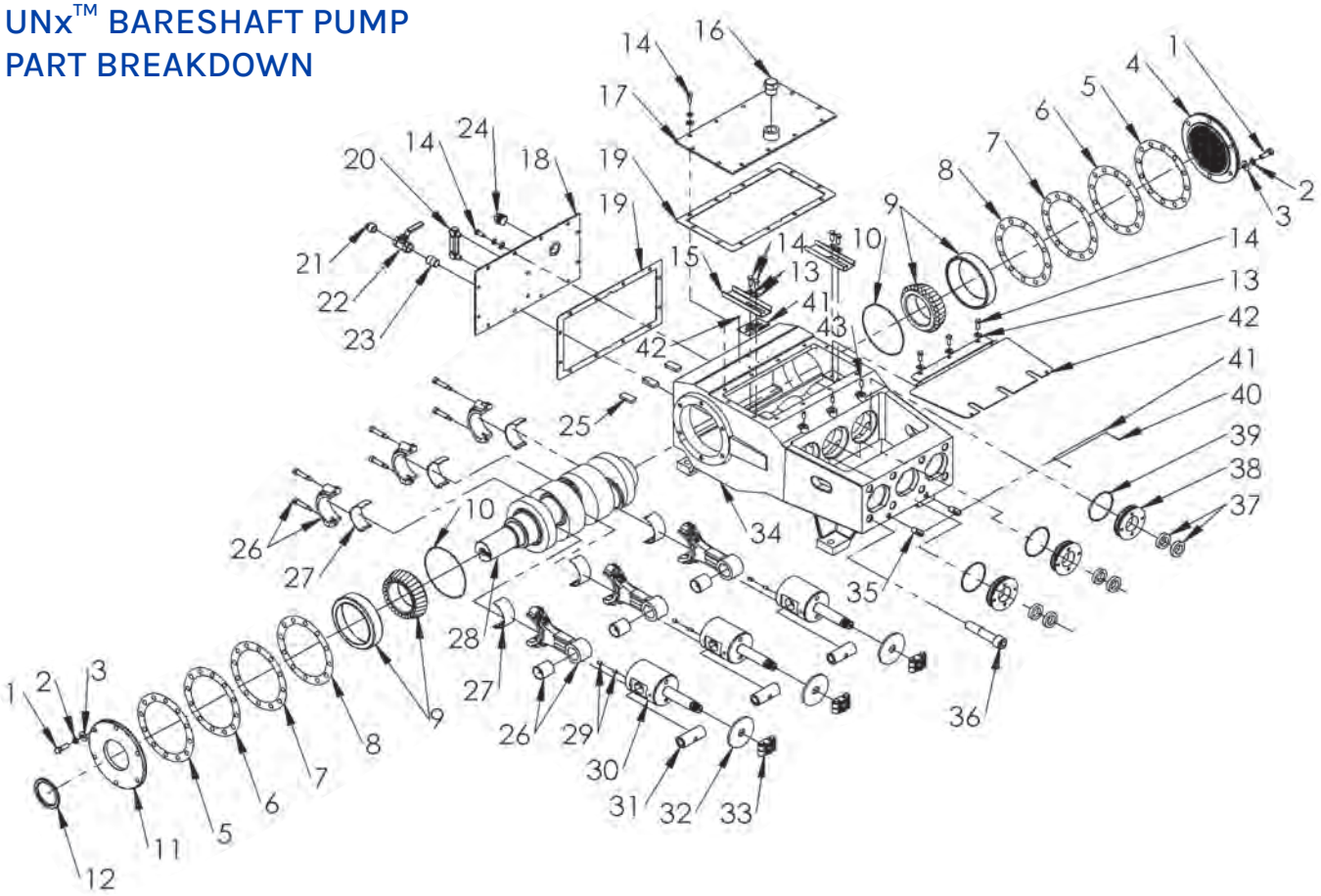

ITEM	PART NO.	DESCRIPTION	ITEM	PART NO.	DESCRIPTION	ITEM	PART NO.	DESCRIPTION
1	26435	Capscrew	16	26360	Breather Cap	30	51738	Crosshead
2	26558	Washer	17	50807	Plate, Top Cover	31	52077	Crosshead Pin
3	26798	Washer	18	55252	Plate, Back Cover	32	26623	Deflector
4	51733	Cap, Frame, Outboard	19	26496	Gasket, Cover Plate	33	51737	Plunger Coupling
5	26495	Shim, End Cap, Yellow	20	71318	Gauge, Oil Level, 3.5"	34	51748	Power Frame
6	26495-1	Shim, End Cap, Brown		28062	Gauge, Oil Level, 4"	35	51659	Trunnion
7	26495-2	Shim, End Cap, White	21	25928	Plug	36	26462	Capscrew
8	26495-3	Shim, End Cap, Blue	22	27101	Ball Valve	37	25536	Oil Seal
9	25541	Bearing Assembly	23	25946	Nipple	38	51712	Oil Seal Plate
10	71016	O-Ring	24	29738	Plug	39	26478	O-Ring
11	51732	Cap, Frame, Inboard	25	26705	Magnet	40	26468	Cotter Pin
12	25428	Crankshaft, Seal	26	51749	Connecting Rod Assy	41	51666	Trunnion Rod
13	25251	Washer	27	26486	Journal Bearing	42	59399	Cover, Rod Box
14	26492	Capscrew	28	25508	Crankshaft	43	26483	Setscrew
15	26484	Oil Trough	29	25132	Setscrew			

UNx™ FLUID ENDS

FEATURES AND BENEFITS

The Jetstream 15,000 psi UNx Fluid End is standard on every Jetstream 15,000 psi unit or bareshaft pump. It is also available as a conversion package for popular pump models or as an addition to an existing Jetstream 3000, 3600, 4200, 5200, 5200Q, or 6000 pump. Please refer to the catalog pages that follow for details on available models.

THE UNX™ ADVANTAGE

SERVICEABILITY

Reduced downtime and maintenance

- Five minute packing change
- Fifteen minute pop-out valve cartridge change
- No special tools or equipment required
- Plungers clamped, NOT threaded

SIMPLICITY

- Fewer parts than other 15,000 psi fluid ends
- Uni-Valve™ one-piece cartridges include suction & discharge valves, seats, springs, and seals
- Swing-down manifold for easy access to components

VERSATILITY

- Fast in-the-field pressure range conversion with simple bolt-on Jetstream UNx Fluid Ends
- Convertibility of the UNx design allows one unit to do the work that another manufacturer would require multiple units or several hours of downtime to perform

OTHER FEATURES

- Water lubricated packing set
- Colmonoy coated plungers (ceramic available upon request)
- High volumetric efficiency
- All pressure-bearing components precision machined high quality stainless steel
- Pulsation dampener built into the manifold

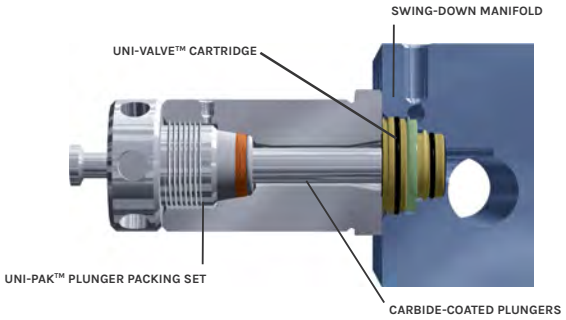

MODEL 6015 (VERSION 1)

UNX™ FLUID END

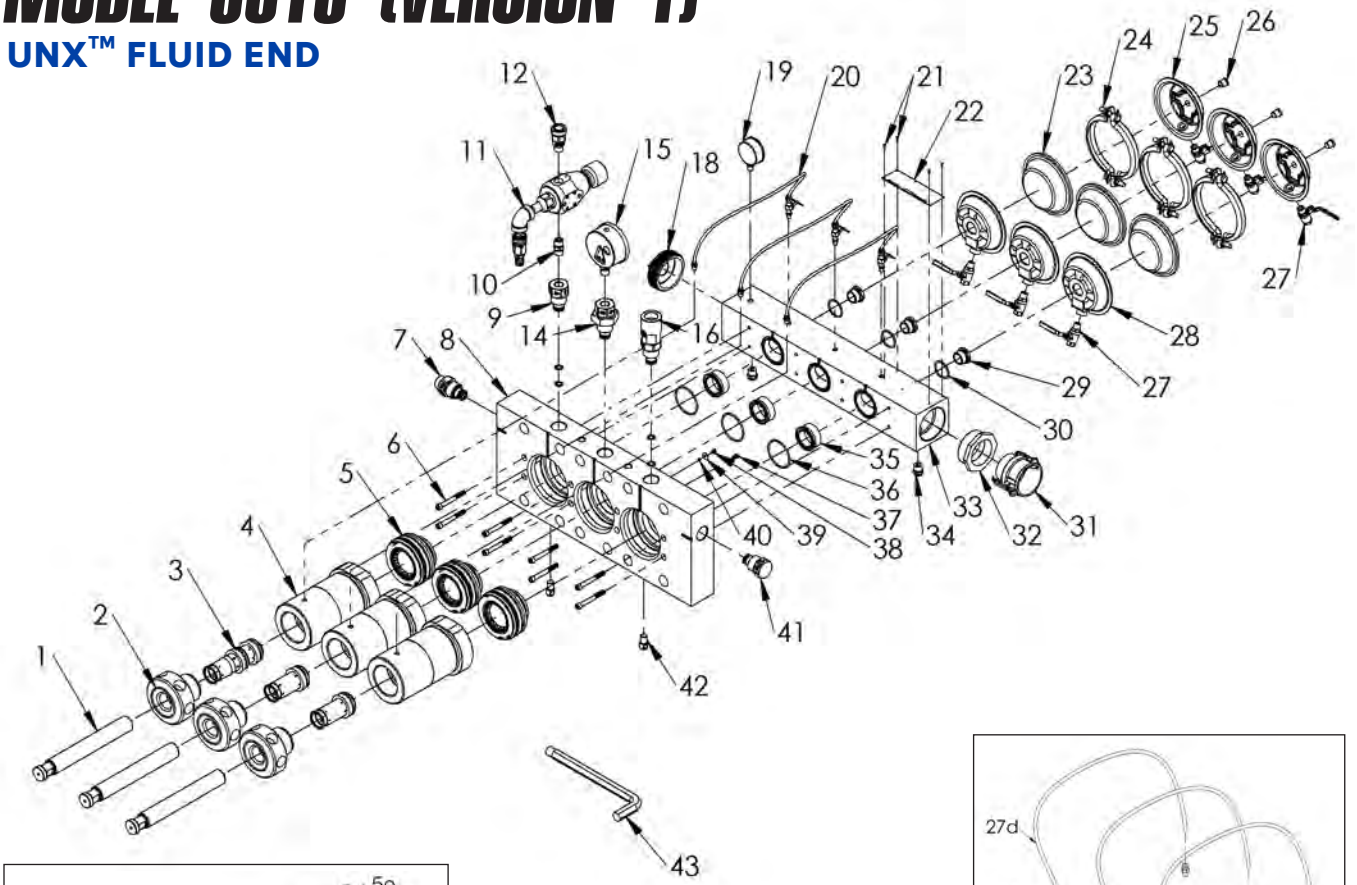

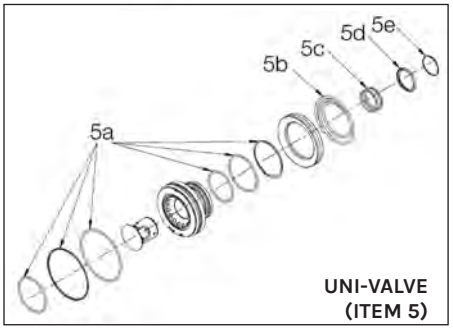

UNI-VALVE (ITEM 5)

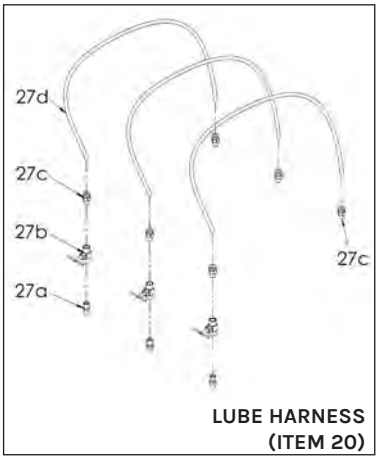

LUBE HARNESS (ITEM 20)

FLUID END SPECS

FLUID END PART NO.*	CONNECTION TYPES	PLUNGER SIZE			PLUNGER STROKE		MAX. CRANK SPEED (RPM)	MAX. FLOW		MAX. OPERATING PRESSURE	
		NO.	DIAMETER								
			in	mm	in	mm		gpm	lpm	psi	bar
62173	Jetstream HF	15	1.55	39.97	5.51	140	457	61.7	233.6	15,000	1034
62174		16	1.58	40.13				64.1	242.7	14,500	1000
62175		19	1.90	48.26				92.7	300.9	10,000	689
62176		21	2.12	53.85				115.4	436.9	8.000	551

PART BREAKDOWN

ITEM	PART NO.	DESCRIPTION	ITEM	PART NO.	DESCRIPTION
1	61916	#15 Plunger	18	60903	Plug
	62349*	#15 Plunger, Ceramic	19	27779	Gage
	62125	#16 Plunger	20	62194	Lube Harness
	61917	#19 Plunger	20a	26465	Nipple
	61918	#21 Plunger	20b	27475	Needle Valve
2	62132	#15 Gland Nut	20c	27732	Hose Fitting
	67437	#16 Gland Nut	20d	27740	Hose (order in feet)
	61933	#19 Gland Nut	21	26379	Screw Drive
	61936	#21 Gland Nut	22	26589	Plate, Caution
3	62178	#15 Packing Set	23	61142	Diaphragm, Pulsation Dampener
	62179	#16 Packing Set	24	61143	Kit, Clamp, Pulsation Dampener
	62180	#19 Packing Set	25	61141	Housing, Air Brake
	62181	#21 Packing Set	26	26148	Plug
4	62126	#15 & #16 Stuffing Box	27	61145	Ball Valve
	61922	#19 Stuffing Box	28	61264	Housing, Pulsation Dampener
	61924	#21 Stuffing Box	29	60758	Adapter, Pulsation Dampener
5	60607	Uni-Valve	30	25566	O-Ring
5a	62243	Uni-Valve Seal Kit	31	29461	Coupler
5b	60603	Discharge Spring	32	J70914	Bushing
5c	60602	Suction Spring	33	61974	Manifold, Suction
5d	60451	Retainer, Suction Valve Spring	34	62471	Adapter
5e	60600	Retaining Ring	35	62379	Insert, Flow Straightening
6	60821	Capscrew	36	60611	O-Ring
7	60952	Adapter	37	62267	Capscrew
8	61977	Manifold, Discharge	38	62212	Capscrew
9	60954	Adapter	39	60265	Washer
10	50488	Nipple	40	62210	Washer
11	53920	Bypass Valve	41	60951	Plug Assy
12	51035	Rupture Disc Assy	42	51659	Trunnion
13**	51053	Burst Disc 24K Psi	43	50889	Wrench,7/8 Hex Key
14	60955	Adapter Assy	44**	26562	Nut
15	51126	Pressure Gauge	45**	27233	Capscrew
16	61272	Rupture Disc Assembly, 6015	46**	62254	Deflector
17**	51052	Burst Disc 20K Psi			

*Optional Ceramic Plunger available. **Not shown.

MODEL 6015 (VERSION 3)

UNX™ FLUID END

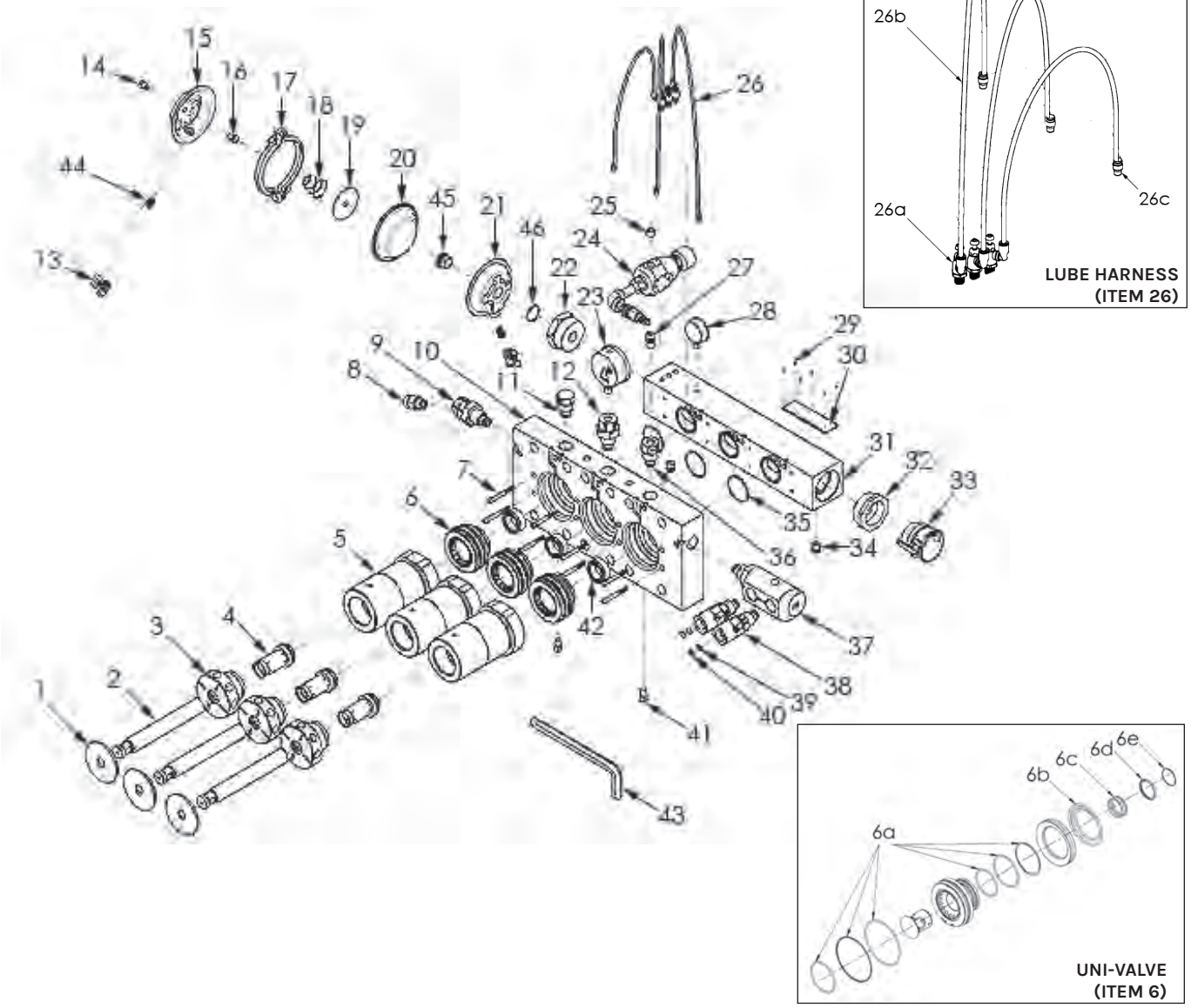

FLUID END SPECS

FLUID END PART NO.*	CONNECTION TYPES	PLUNGER SIZE			PLUNGER STROKE		MAX. CRANK SPEED (RPM)	MAX. FLOW		MAX. OPERATING PRESSURE	
		NO.	DIAMETER								
			in	mm	in	mm		gpm	lpm	psi	bar
62173	Jetstream HF	15	1.55	39.97	5.51	140	457	61.7	233.6	15,000	1034
62174		16	1.58	40.13				64.1	242.7	14,500	1000
62175		19	1.90	48.26				92.7	300.9	10,000	689
62176		21	2.12	53.85				115.4	436.9	8.000	551

PART BREAKDOWN

ITEM	PART NO.	DESCRIPTION	ITEM	PART NO.	DESCRIPTION
1*	62254	Deflector	18	63177	Spring, Conical
2	61916	#15 Plunger	19	63115	Pusher, Pulsation Dampener
	62349**	#15 Plunger, Ceramic	20	61142	Diaphragm, Pulsation Dampener
	62125	#16 Plunger	21	61264	Housing, Pulsation Dampener
	61917	#19 Plunger	22	62981	Adapter, Pulsation Dampener
	61918	#21 Plunger	23	51126	Pressure Gauge
3	62132	#15 Gland Nut	24	53920	Bypass Valve
	67437	#16 Gland Nut	25	26115	Plug
	61933	#19 Gland Nut	26	63111	Lube Harness
	61936	#21 Gland Nut	26a	63019	Flow Control Valve
4	62178	#15 Packing Set	26b	27740	Hose (order in feet)
	62179	#16 Packing Set	26c	27732	Adapter
	62180	#19 Packing Set	27	50488	Nipple
	62181	#21 Packing Set	28	27779	Gauge
5	62126	#15 & #16 Stuffing Box	29	26379	Screw Drive
	61922	#19 Stuffing Box	30	26589	Plate, Caution
	61924	#21 Stuffing Box	31	63068	Manifold, Suction
6	60607	Uni-Valve	32	J70914	Bushing
6a	62243	Uni-Valve Seal Kit	33	29461	Coupler
6b	60603	Discharge Spring	34	62471	Adapter
6c	60602	Suction Spring	35	60611	O-Ring
6d	60451	Retainer, Suction Valve Spring	36	60954	Adapter
6e	60600	Retaining Ring	37	63057	Adapter, Dual Burst Disc
7	60821	Capscrew	38	61272	Rupture Disc Assembly, 6015
8	28852	3/4" NPT Male Adapter x 1-5/16" Type M	39	Various	Standard 15K Rupture Discs
9	61823	Adapter, Clockable	40	61271	Diffuser, Rupture Disc Holder
10	63092	Manifold, Discharge	41	51659	Trunnion
11	60951	Plug Assy	42	62379	Insert, Flow Straightening
12	60955	Adapter Assy	43	50889	Wrench,7/8 Hex Key
13	63114	Ball Valve, T-Handle	44	63156	Nipple
14	63178	Plug	45	60758	Adapter
15	61141	Housing, Air Brake	46	25566	O-Ring
16	63179	Retainer, Conical Spring			
17	61143	Kit, Clamp, Pulsation Dampener			

*Power end component included in drawing for convenience. Not included with new fluid ends.

**Optional Ceramic Plunger available.

MODEL 52150

UNX™ FLUID END

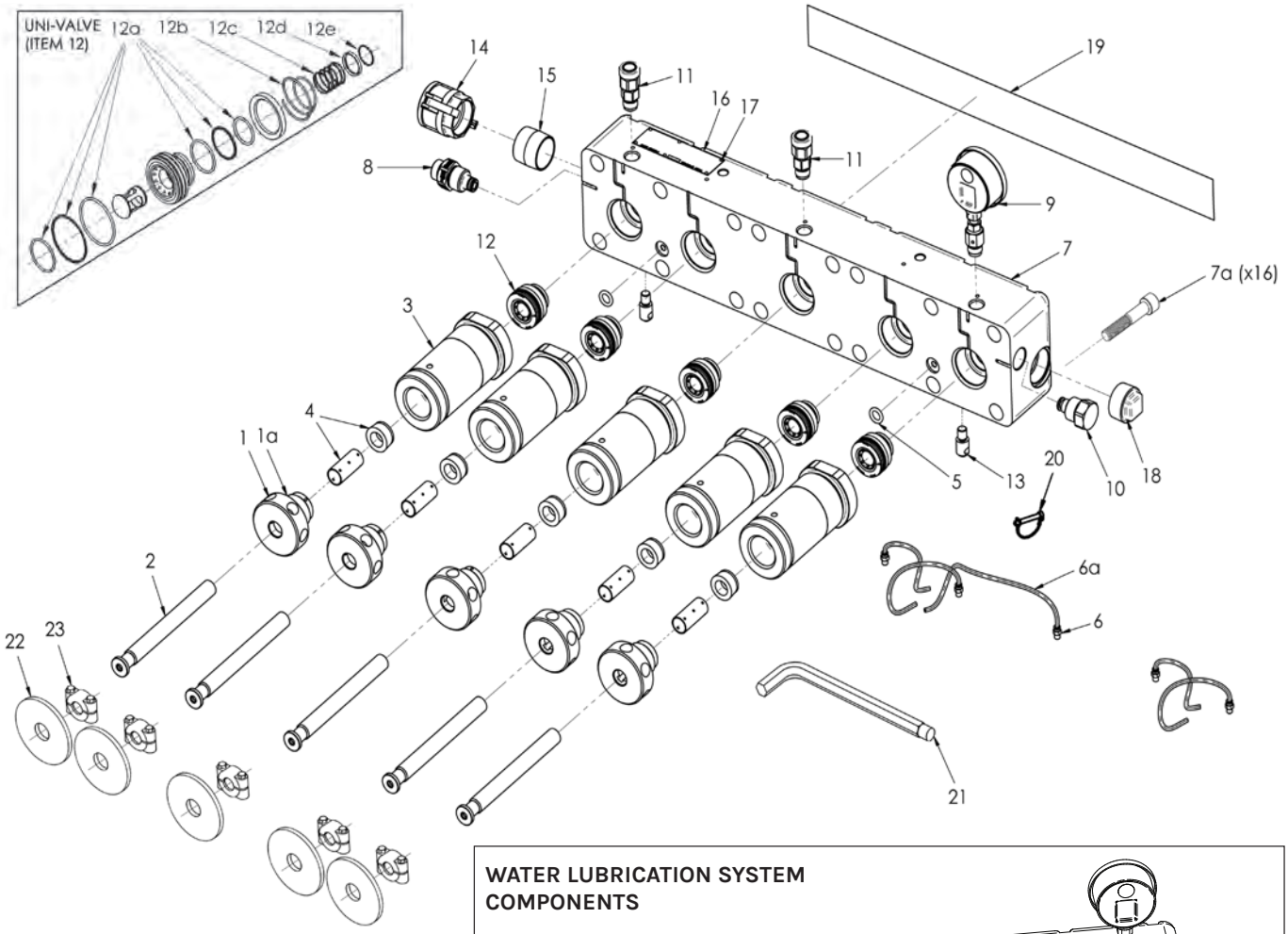

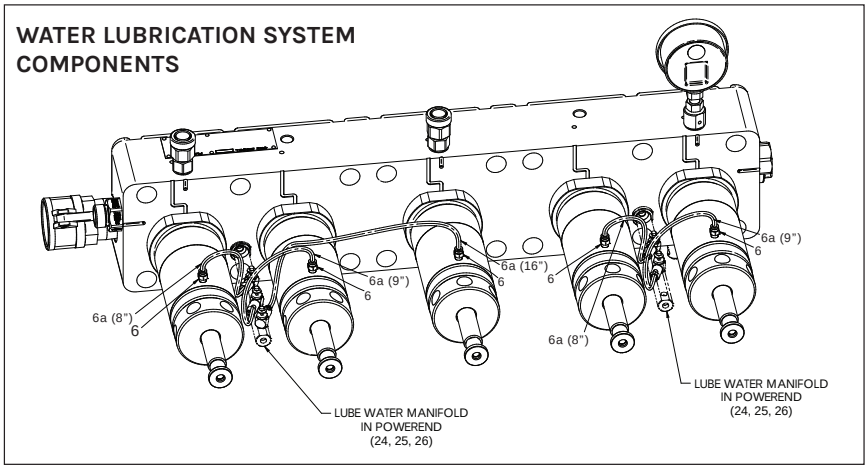

FLUID END SPECS

FLUID END PART NO.*	CONNECTION TYPES	PLUNGER SIZE			PLUNGER STROKE		MAX. CRANK SPEED (RPM)	MAX. FLOW		MAX. OPERATING PRESSURE	
		NO.	DIAMETER								
			in	mm	in	mm		gpm	lpm	psi	bar
69121	Jetstream HF	12	1.200	30.48	5.25	133	547	70.3	266	15,000	1034
69383		13	1.335	33.91				87.0	329	12,500	863
69384		15	1.500	38.10				109.8	416	10,000	690

MODEL 5215Q
UNx™ FLUID END
PART BREAKDOWN

ITEM	PART NO.	DESCRIPTION	ITEM	PART NO.	DESCRIPTION
1	51707	#12 Gland Nut	12	69389	Uni-Valve
	51744	#13 Gland Nut	12a	52875	Uni-Valve Seal Kit
	51746	#15 Gland Nut	12b	27119	Discharge Valve Spring
1a	26387	O-Ring (#11 to #15)	12c	27118	Suction Valve Spring
2	67038	#12 Plunger	12d	52879	Spring Retainer
	67039	#13 Plunger	12e	52878	Retaining Ring
	67040	#15 Plunger	13	67686	Trunnion
3	67070	#12, #13, #15 Stuffing	14	27539	Coupler
4	50660	#12 Packing Set	15	27114	Nipple
	50661	#13 Packing Set	16	26589	Identifying Plate
	50662	#15 Packing Set	17	26379	Screw
5	67548	O-Ring	18	25036	Plug
6	27732	Adapter	19	68714-GRN	15K Manifold Decal
6a	67808	Tubing	20*	69068	Cotter Pin
7	67769	Manifold	21	50889	Pump Wrench
7a*	26500	Capscrew	22*	26487	Deflector
8	60953	Adapter Assy	23*	51736	Plunger Coupling
9	25771	10K Pressure Gauge	24*	67781	Lube Line Adapter
	51126	15K Pressure Gauge	25*	67412	Needle Valve
10	60951	Port Plug	26*	25120	Plug
11	51035	Rupture Disc Assy			

*Power end component included in drawing for convenience. Not included with new fluid ends.

MODEL 5215

UNX™ FLUID END

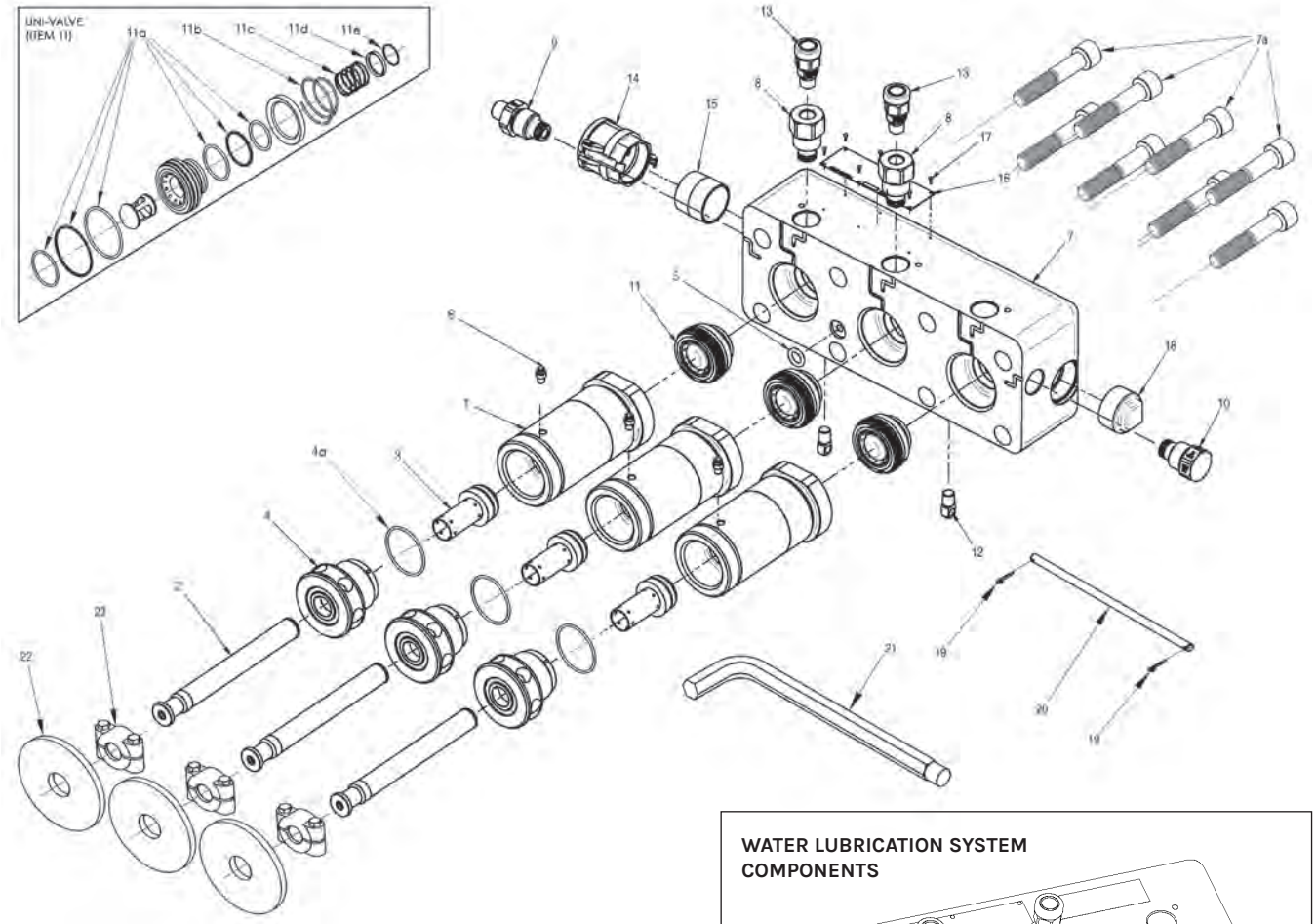

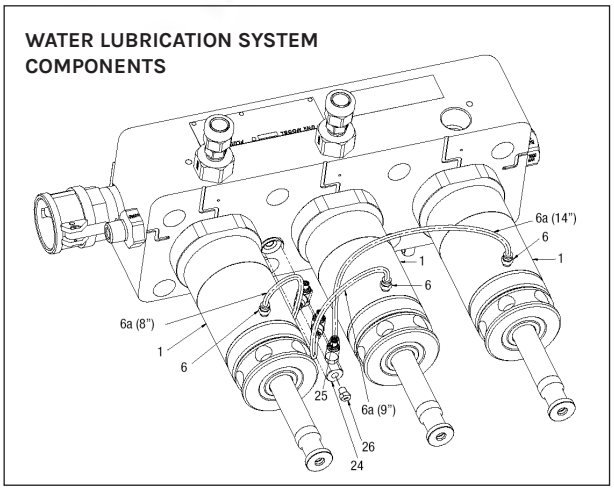

FLUID END SPECS

FLUID END PART NO.*	CONNECTION TYPES	PLUNGER SIZE			PLUNGER STROKE		MAX. CRANK SPEED (RPM)	MAX. FLOW		MAX. OPERATING PRESSURE	
		NO.	DIAMETER								
			in	mm	in	mm		gpm	lpm	psi	bar
67378	Jetstream HF	11	1.100	27.94	5.25	133	518	33.6	127	15,000	1034
67379		12	1.200	30.48				40.0	151	15,000	1034
67380		13	1.335	33.91				49.5	187	12,000	861
67381		15	1.500	38.10				62.1	235	10.000	689

PART BREAKDOWN

ITEM	PART NO.	DESCRIPTION	ITEM	PART NO.	DESCRIPTION
1	67069	#11 Stuffing Box	10	60951	15K Plug Assy
	67070	#12, #13, #15 Stuffing	11	52870	Uni-Valve
2	67037	#11 Plunger	11a	52875	Uni-Valve Seal Kit
	67038	#12 Plunger	11b	27119	Discharge Valve Spring
	67039	#13 Plunger	11c	27118	Suction Valve Spring
	67040	#15 Plunger	11d	52879	Spring Retainer
3	50659	#11 Packing Set	11e	52878	Retaining Ring
	50660	#12 Packing Set	12	51659	Trunnion
	50661	#13 Packing Set	13	51035	Rupture Disc Assy
	50662	#15 Packing Set	14	27539	Coupler
4	51651	#11 Gland Nut	15	27114	Nipple
	51707	#12 Gland Nut	16	26589	Caution Plate
	51744	#13 Gland Nut	17	26379	Setscrew
	51746	#15 Gland Nut	18	25036	Plug
4a	26387	O-Ring (#11 to #15)	19*	26468	Cotter Pin
5	67548	O-Ring	20*	50295	Trunnion Rod
6	27732	Adapter	21	50889	Pump Wrench
6a	67808	Tubing	22*	26487	Deflector
7	67277	Manifold	23*	51736	Plunger Coupling
7a*	26500	Capscrew	24*	67781	Lube Line Adapter
8	60954	15K Adapter Assy	25*	67412	Needle Valve
9	60953	15K Adapter Assy	26*	25120	Plug

*Power end component included in drawing for convenience. Not included with new fluid ends.

MODEL 50150

UNX™ FLUID END

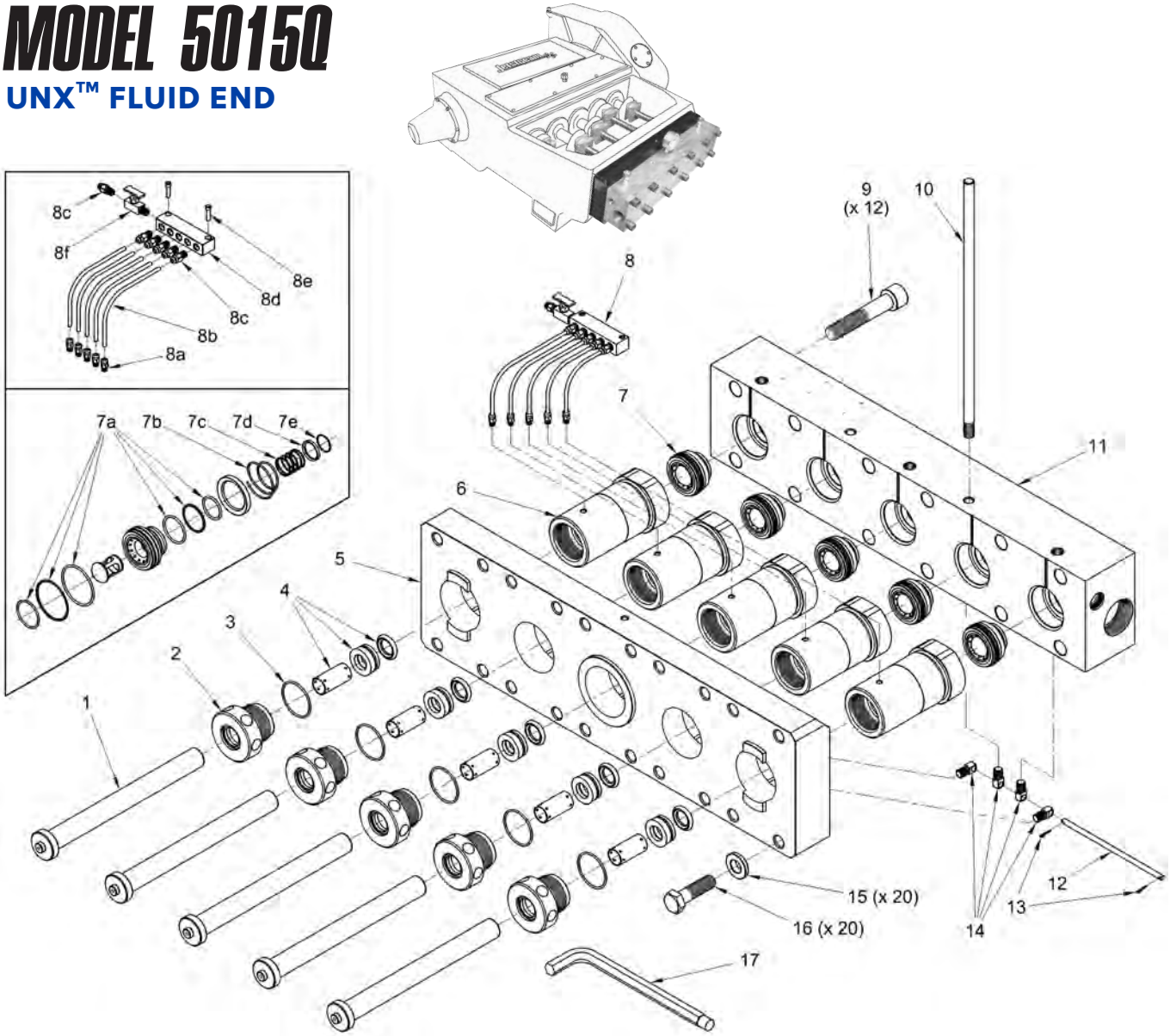

FLUID END SPECS

FLUID END PART NO.*	CONNECTION TYPES		PLUNGER SIZE			PLUNGER STROKE		MAX. RPM	MAX. FLOW*		MAX. OPERATING-PRESSURE		TYPICAL DIESEL POWER	
	TOP PORTS	DISCHARGE PORTS	NO.	DIAMETER										
				in	mm	in	mm		gpm	lpm	psi	bar	hp	kW
61534	1/2" NPT Female	Jetstream HHP	10	.980	24.89	5.00	127	413	33.7	128	15,000	1034	327	244
54655**			12	1.200	30.48				50.6	192	15,000	1034	490	365
54906														
60613			13	1.335	33.91				62.6	237	12,500	862	505	376
54650**			15	1.500	38.10				79.1	299	10,000	689	510	380
54873														
54700**			16	1.670	42.42				98.0	371	8,000	551	506	377
54872														

*Displacement (flow) values represented refer to "theoretical" flow, neglecting inefficiency resulting compressibility of water and expansion of pressure-bearing components. Specified maximum flow rates are based on selected input powers and working pressures and constrained by power end limitations (pump speed, frame load, maximum input power). Actual output may vary depending on the performance specifications of the engine (or motor), drive sheave ratio, and actual working pressure.
**With adapter plate and mounting hardware..

PART BREAKDOWN

ITEM	PART NO.	DESCRIPTION	ITEM	PART NO.	DESCRIPTION
1	61512	#!0 Plunger	7	52870	Uni-Valve
	54631	#12 Plunger	7a	52875	Uni-Valve Seal Kit
	57997*	#12 Plunger, Ceramic	7b	27119	Discharge Valve Spring
	60608	#13 Plunger	7c	27118	Suction Valve Spring
	54629	#15 Plunger	7d	52879	Spring Retainer
	54851	#16 Plunger	7e	52878	Retaining Ring
2	51647	#10 Gland Nut	8**	54690	Lube Harness Assy
	51707	#12 Gland Nut	8a**	27732	Tube Fitting, 1/8" NPT
	51744	#13 Gland Nut	8b**	27740	Hose (order in feet)
	51746	#15 Gland Nut	8c**	J70518	Tube Fitting, 1/4" NPT
	53316	#16 Gland Nut	8d**	52494	Lube Manifold
3	26387	O-Ring, #10, #12,#13, & #15 Gland Nut	8e**	26689	Capscrew
	26930	O-Ring, #16 Gland Nut	8f**	26876	Needle Valve
4	50658	#10 Packing Set	9**	26500	Manifold Bolt
	50660	#12 Packing Set	10**	52114	Lifting Rod
	50661	#13 Packing Set	11	54626	Manifold
	50662	#15 Packing Set	12**	50295	Trunnion Rod
	53321	#16 Packing Set	13**	26468	Cotter Pin
5**	54627	Adapter Plate	14	51659	Trunnion
6	61511	#10 Stuffing Box	15**	54638	Washer
	54628	#12, #13 & #15 Stuffing Box	16**	60248	Adapter Plate Bolt
	54849	#16 Stuffing Box	17	50889	Pump Wrench

*Optional Ceramic Plunger available. **Pre-existing component included in drawing for convenience. Not included with new fluid ends.

REPLACEABLE POWER END PARTS**

PART NO.	DESCRIPTION
29623	Oil Seal (inside plate)
29891	NOV Wiper (inside plate)
70039	Seal Plate
29630	Gasket (to seal plate)
59318	Seal Washer (holds seal plate)
58279	Hook Belts
29889	Pony Rod
29427	Plunger Clamps

**Parts not shown.

MODELS 4215HF & 3615HF

UNX™ FLUID ENDS

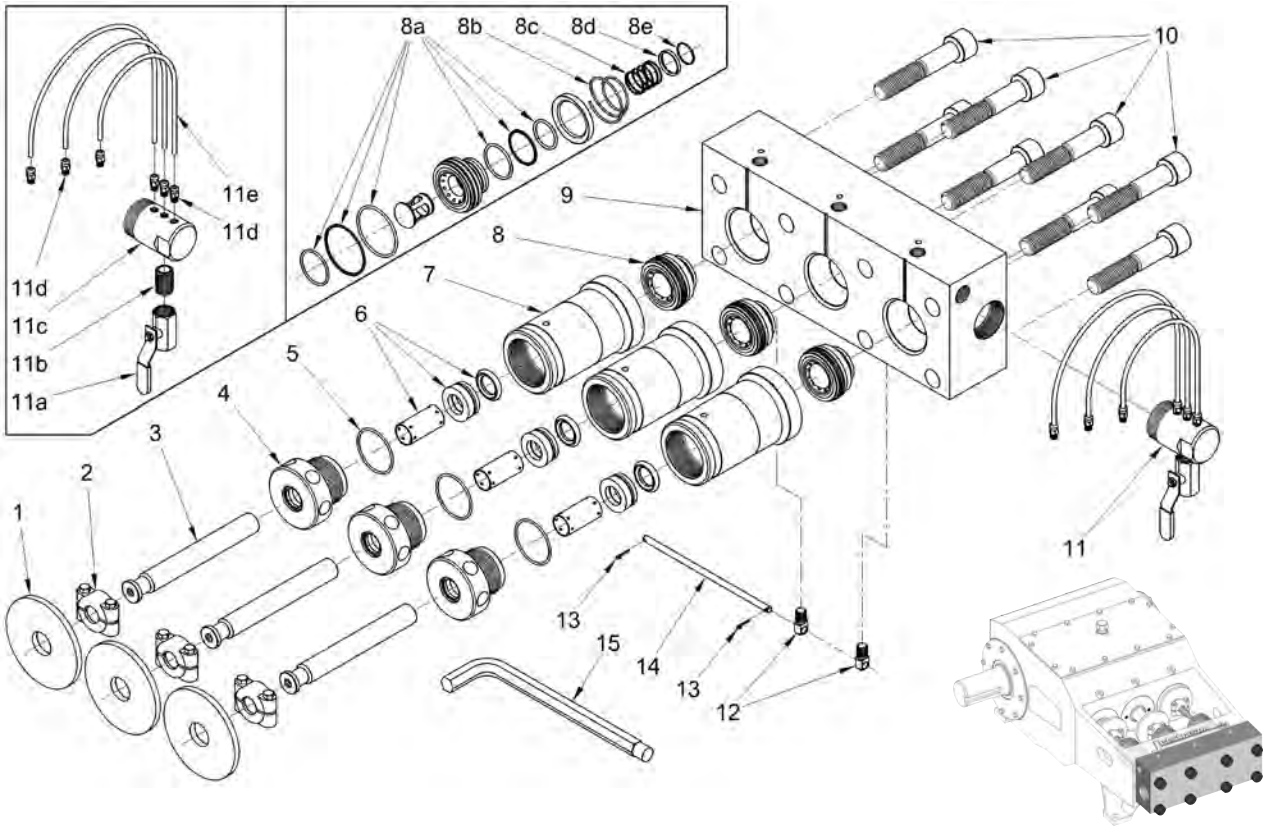

FLUID END SPECS

FLUID END PART NO.*	CONNECTION TYPES		PLUNGER SIZE			PLUNGER STROKE		MAX. RPM	MAX. FLOW		MAX. OPERATING-PRESSURE		TYPICAL DIESEL POWER	
	TOP PORTS	DISCHARGE PORTS	NO.	DIAMETER in	DIAMETER mm	in	mm		gpm	lpm	psi	bar	hp	kW
3615HF														
53085	1/2" NPT Female	3/4" NPT Female	9	.900	22.86	3.60	92	550	16.4	62	15,000	1034	158	118
53090			10	.980	24.89				19.4	73	15,000	1034	188	140
53095			11	1.100	27.94				24.4	92	12,500	861	197	147
53100			12	1.200	30.48				29.1	110	10,000	689	188	140
53105			13	1.335	33.91				36.0	136	8,000	551	186	139
53110			15	1.500	38.10				45.5	172	6,500	469	191	142
4215HF														
53090	1/2" NPT Female	3/4" NPT Female	10	.980	24.89	4.25	108	518	21.5	81	15,000	1034	209	156
53095			11	1.100	27.94				27.1	102	15,000	1034	263	196
53100			12	1.200	30.48				32.3	122	15,000	1034	313	233
53105			13	1.335	33.91				40.0	151	12,500	861	323	241
53110			15	1.500	38.10				50.5	191	10,000	689	326	243
53330			16	1.670	42.42				62.6	237	8,000	551	323	241
63794			18	1.810	45.97				73.5	278	6,800	469	323	241

PART BREAKDOWN

ITEM	PART NO.	DESCRIPTION
1*	26487	Deflector
2*	51736	Plunger Coupling
3	51808	#9 Plunger
	51721	#10 Plunger
	51721C**	#10 Plunger, Ceramic
	51722	#11 Plunger
	51722C**	#11 Plunger, Ceramic
	51723	#12 Plunger
	51723C**	#12 Plunger, Ceramic
	51724	#13 Plunger
	51724C**	#13 Plunger, Ceramic
	51726	#15 Plunger
	51726C**	#15 Plunger, Ceramic
	53314	#16 Plunger
	53314C**	#16 Plunger, Ceramic
	63765	#18 Plunger
4	51809	#9 Gland Nut
	51647	#10 Gland Nut
	51651	#11 Gland Nut
	51707	#12 Gland Nut
	51744	#13 Gland Nut
	51746	#15 Gland Nut
	53316	#16 Gland Nut
	63768	#18 Gland Nut
5	26387	O-Ring (#9 to #15, #18 Gland Nut)
	26930	O-Ring (#16 Gland Nut)

*Power end component included in drawing for convenience. Not included with new fluid ends.
**Optional Ceramic Plungers available.
***Not Shown.

ITEM	PART NO.	DESCRIPTION
6	51802	#9 Packing Set
	50658	#10 Packing Set
	50659	#11 Packing Set
	50660	#12 Packing Set
	50661	#13 Packing Set
	50662	#15 Packing Set
	53321	#16 Packing Set
	61124/63793	#18 Packing Set (standard/1-piece)
7	52872	#9, #10 & #11 Stuffing Box
	52873	#12, #13 & #15 Stuffing Box
	53313	#16 Stuffing Box
	63767	#18 Stuffing Box
8	52870	Uni-Valve
8a	52875	Uni-Valve Seal Kit
8b	27119	Discharge Valve Spring
8c	27118	Suction Valve Spring
8d	52879	Spring Retainer
8e	52878	Retaining Ring
9	52864	Manifold
10*	26500	Manifold Bolt
11	51975	Lube Harness
11a	27101	Ball Valve
11b	25946	Nipple
11c	55477	Lube Manifold
11d	27732	Hose Fitting
11e	27740	Hose (Order in feet)
12	51659	Trunnion
13*	26468	Cotter Pin
14*	50295	Trunnion Rod
15	50889	Pump Wrench
16***	71147-FE	Warning Decals, FE Only
17***	62172-GRN	Manifold Decals

NOTE: Parts listed on this page are components of current 4215HF & 3615HF fluid end models. For first generation fluid end models which utilize different stuffing boxes, valves and manifold, see the following page. “HF” and first generation models can be most easily distinguished by the part number stamped on the top face of the fluid end manifold. Current (HF) models use manifold part number 52864 while first generation fluid ends use manifold part number 50896.

MODELS 4215 & 3615 (GEN 1)

UNX™ FLUID ENDS

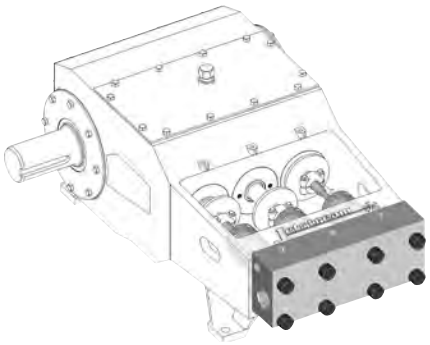

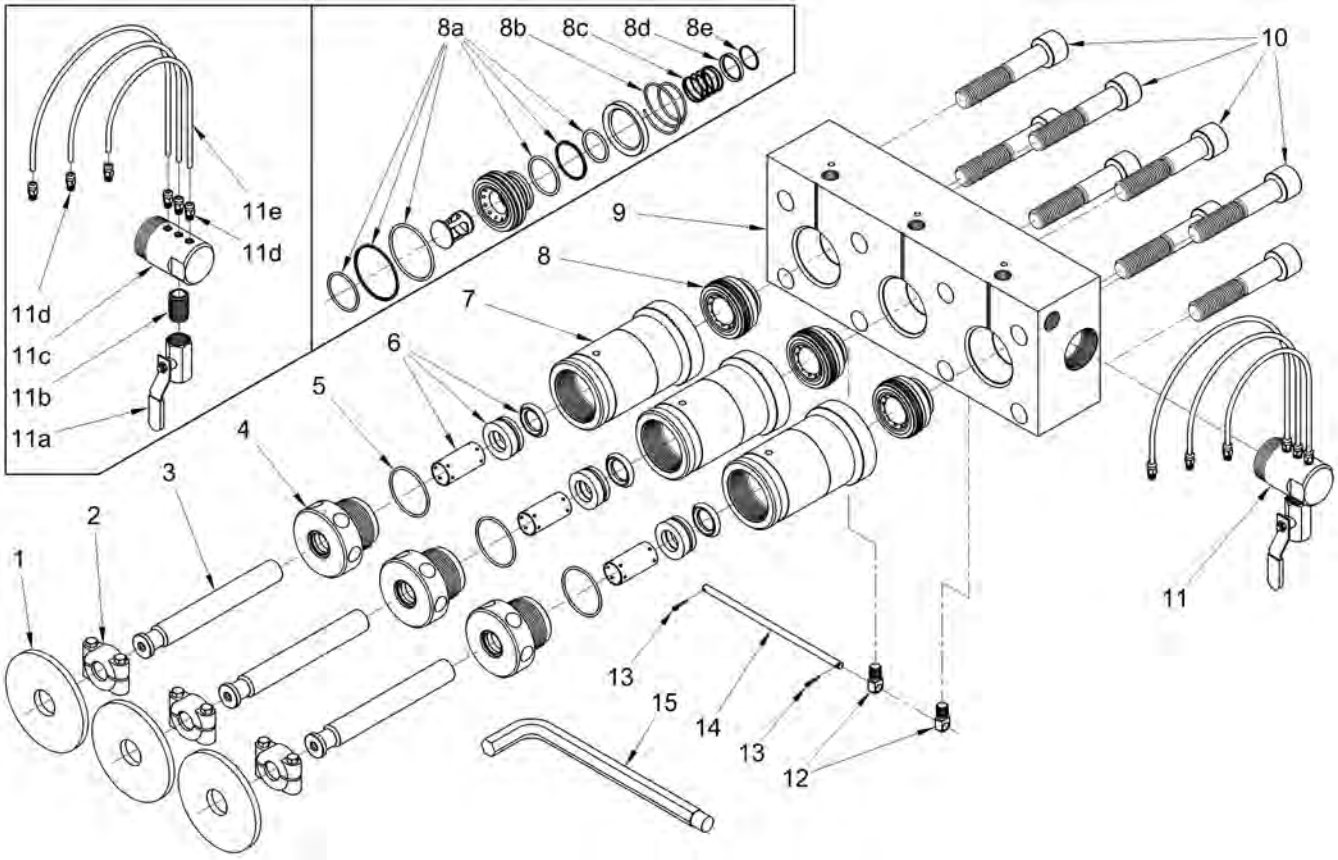

PART BREAKDOWN

ITEM	PART NO.	DESCRIPTION	ITEM	PART NO.	DESCRIPTION
1*	26487	Deflector	7	50297	#9, #10 & #11 Stuffing Box
2*	51736	Plunger Coupling		50299	#12, #13 & #15 Stuffing Box
3	51808	#9 Plunger	8	50365	Uni-Valve
	51721	#10 Plunger	8a	50370	Uni-Valve Seal Kit
	51722	#11 Plunger	8b	25060	Discharge Valve Spring
	51723	#12 Plunger	8c	25059	Suction Valve Spring
	51724	#13 Plunger	8d	50303	Spring Retainer
	51726	#15 Plunger	8e	25255	Retaining Ring
4	51809	#9 Gland Nut	9	50896	Manifold
	51647	#10 Gland Nut	10*	26500	Manifold Bolt
	51651	#11 Gland Nut	11	51975	Lube Harness
	51707	#12 Gland Nut	11a	27101	Ball Valve
	51744	#13 Gland Nut	11b	25946	Nipple
	51746	#15 Gland Nut	11c	55477	Lube Manifold
5	26387	O-Ring	11d	27732	Hose Fitting
6	51802	#9 Packing Set	11e	27740	Hose (Order in feet)
	50658	#10 Packing Set	12	51659	Trunnion
	50659	#11 Packing Set	13*	26468	Cotter Pin
	50660	#12 Packing Set	14*	50295	Trunnion Rod
	50661	#13 Packing Set	15	50889	Pump Wrench
	50662	#15 Packing Set			

*Power end component included in drawing for convenience. Not included with new fluid ends.

NOTE: Parts listed on this page are components of first generation 4215 & 3615 fluid end models no longer sold. These models utilize different stuffing boxes, valve and manifold than the current "HF" design. "HF" and first generation models can be most easily distinguished by the part number stamped on the top face of the fluid end manifold. Current (HF) models use manifold part number 52864 while the first generation fluid ends featured on this page use manifold part number 50896.

MODEL 3015

UNX™ FLUID END

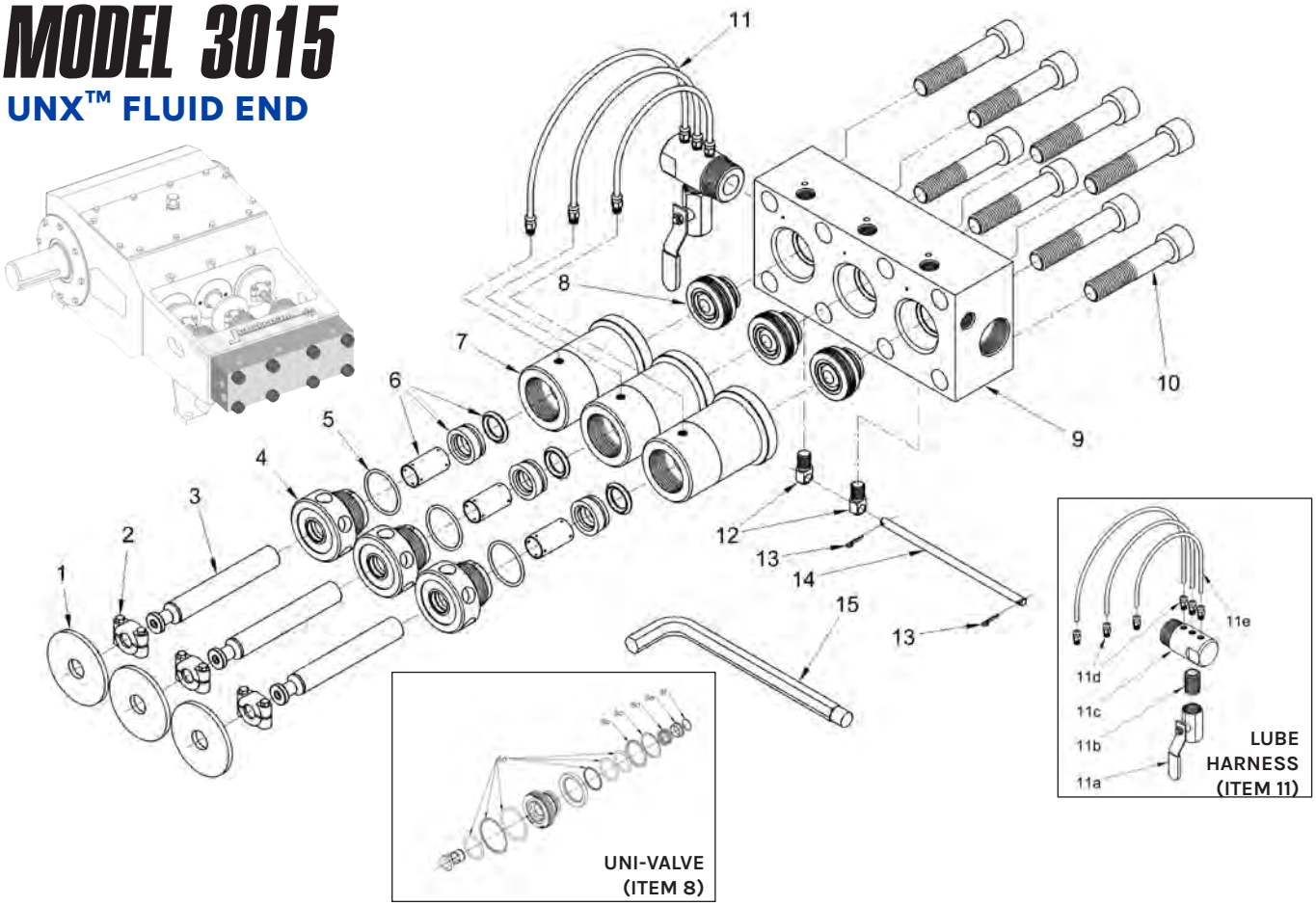

FLUID END SPECS

FLUID END PART NO.*	CONNECTION TYPES			PLUNGER SIZE			PLUNGER STROKE		MAX. RPM	MAX. FLOW		MAX. OPERATING-PRESSURE		TYPICAL DIESEL POWER	
	TOP PORTS	DISCHARGE PORTS	SUPPLY PORT	NO.	DIAMETER in	DIAMETER mm	in	mm		gpm	lpm	psi	bar	hp	kW
52055	1/2" NPT Female	1/2" NPT Female	1-1/2" NPT Female	7	.735	18.67	3.00	76	600	9.9	37	15,000	1034	96	72
52060				8	.800	20.32			600	11.8	45	15,000	1034	114	85
										11.8	45	12,500	861	95	71
52065				9	.900	22.86			600	14.9	56	15,000	1034	144	107
										14.9	56	13,000	896	125	93
										14.0	6	10,000	689	96	72
52070				10	1.000	25.40			600	18.4	70	15,000	1034	200	149
										18.4	70	12,500	861	148	110
										18.4	70	10,000	689	118	88
										18.4	70	8,000	551	95	71
68454				10HF	1.062	26.97			600	20.7	78	15,000	1034	200	149
52270				11	1.125	28.58			600	23.2	88	13,000	896	200	149
										23.2	88	10,000	689	150	112
										23.2	88	8,000	551	120	89
										23.2	88	6,500	448	97	72

**Displacement (flow) values represented refer to "theoretical" flow, neglecting inefficiency resulting compressibility of water and expansion of pressure-bearing components. Performance data is based on power end specifications published by the original equipment manufacturer; however, some power ends may differ from those used to determine the values above. Contact a Jetstream Solutions Provider for help with fluid end selection.

PART BREAKDOWN

ITEM	PART NO.	DESCRIPTION	ITEM	PART NO.	DESCRIPTION
1*	26623	Deflector	7	51611	#7, #8 Stuffing Box
2*	51737	Plunger Coupling		51671	#9, #10 Stuffing Box
3	51831	#7 Plunger		52232	#10HF, #11 Stuffing Box
	51741	#8 Plunger	8	51675	Uni-Valve
	51741C**	#8 Plunger, Ceramic	8a	50034	Uni-Valve Seal Kit
	51742	#9 Plunger	8b	26476	Discharge Valve Spring
	51742C**	#9 Plunger, Ceramic	8c	26470	Retaining Ring
	51743	#10 Plunger	8d	26472	Suction Valve Spring
	51743C**	#10 Plunger, Ceramic	8e	51664	Spring Retainer
	67748	#10HF Plunger	8f	26474	Retaining Ring
	52229	#11 Plunger	9	51672	Manifold
4	51617	#7 Gland Nut	10*	26462	Manifold Bolt
	51619	#8 Gland Nut	11	51970	Lube Harness
	51621	#9 Gland Nut	11a	27101	Ball Valve
	51623	#10 Gland Nut	11b	25946	Nipple
	67826	#10HF Gland Nut	11c	53242	Lube Manifold
	52231	#11 Gland Nut	11d	27732	Hose Fitting
5	26416	O-Ring	11e	27740	Hose (Order in feet)
6	51689	#7 Packing Set	12	51659	Trunnion
	51691	#8 Packing Set	13*	26468	Cotter Pin
	51674	#9 Packing Set	14*	51666	Trunnion Rod
	51697	#10 Packing Set	15	50064	Pump Wrench
	68459	#10HF Packing Set	16***	71147-FE	Warning Decals, FE Only
	52233	#11 Packing Set	17***	62171-GRN	Manifold Decals

*Power end component included in drawing for convenience. Not included with new fluid ends.
**Optional Ceramic Plungers available.
***Not Shown

UNx™ FLUID END UPGRADES

BRINGING THE UNX™ ADVANTAGE TO YOUR EXISTING PUMP

Jetstream has created a wide variety of UNx Fluid Ends conversions to adapt to your existing competitor pump. The upgrade delivers all of the benefits of the UNx Fluid End design with the additional benefit that couples our fluid end to your current competitor pump. These benefits include and are not limited to:

- Pressures from 5,000 psi to 40,000 psi
- Superior performance to optimize productivity
- Greater flexibility in the field
- Quick serviceability reducing downtime and maintenance in the field
- Most major competitor conversions available
- Easily converted while on the job
- Water lubricated packing set

See Fluid End features and benefits on B-23. Contact Jetstream for questions regarding the upgrade required.

JETSTREAM FLUID END CONVERSIONS

FLUID END PART NO.	FLUID END MODEL	DESCRIPTION	MANUFACTURER	MANUFACTURER MODEL
51700	3015B	#7 Triplex	Butterworth/Gardner Denver	T-300, L-300, L-74, I-300, PT-33
51705	3015B	#8 Triplex		
51710	3015B	#9 Triplex		
51715	3015B	#10 Triplex		
52290	3015B	#11 Triplex		
65121	3015BM	#7 Triplex	Butterworth/Gardner Denver	T-300M
65123	3015BM	#8 Triplex		
65124	3015BM	#9 Triplex		
65125	3015BM	#10 Triplex		
65126	3015BM	#11 Triplex		
52225	3715B	#9 Triplex	Butterworth/Gardner Denver	L-375, T-375, I-375, TF-375, L-130, TF-375, TX-375, TX-3750H
52230	3715B	#10 Triplex		
52235	3715B	#11 Triplex		
52240	3715B	#12 Triplex		
52245	3715B	#13 Triplex		
59405	3715B	#15 Triplex		
51950	4015B	#9 Triplex	Butterworth/Gardner Denver	L-77
51865	4015B	#10 Triplex		
51870	4015B	#11 Triplex		
51875	4015B	#12 Triplex		
51880	4015B	#13 Triplex		
51840	4515HF B	#10 Triplex	Butterworth/Gardner Denver	L-450, T-450, TF-450, L-200
51845	4515HF B	#11 Triplex		
51850	4515HF B	#12 Triplex		
51855	4515HF B	#13 Triplex		
51860	4515HF B	#15 Triplex		
J55775	4515B	#16 Triplex		
67132	4515BQ	#19 Quintuplex	Butterworth/Gardner Denver	QF450S

JETSTREAM FLUID END CONVERSIONS

FLUID END PART NO.	FLUID END MODEL	DESCRIPTION	MANUFACTURER	MANUFACTURER MODEL
52170	5015G	#15 Triplex	Gardner Denver	PE-5, P172
52185	5015G	#17 Triplex		
67583	3015NC	#9 Triplex	NLB	8125, 10145, 125 Series Pumps
51720	3015N	#7 Triplex	Union	1012C, 1012D TD-60 (Power End)
51725	3015N	#8 Triplex		
51730	3015N	#9 Triplex		
51735	3015N	#10 Triplex	NLB	1012C, 1012D
52265	3015N	#11 Triplex	Union	TD-60 (Power End)
51800	4215N	#10 Triplex	NLB	10150, 10200, 10225, 10203, TD-120, 225 Series Pumps
51805	4215N	#11 Triplex		
51285	4215N	#12 Triplex		
51810	4215N	#13 Triplex		
51815	4215N	#15 Triplex		
J55720	4215N	#16 Triplex		
53555	4215QN	#10 Quintuplex	NLB	10250, QD-200 (Power End)
53560	4215QN	#11 Quintuplex		
53565	4215QN	#12 Quintuplex		
53585	4215QN	#13 Quintuplex		
53575	4215QN	#15 Quintuplex		
69016	3015R	#8 Triplex	Reliable	RD115
68584	3015R	#10 Triplex		
52755	3115T	#7 Triplex	Tritan	3310SS, 3310WSS, P-313, P-323, P-330A
52760	3115T	#8 Triplex		
52765	3115T	#9 Triplex		
52770	3115T	#10 Triplex		
51915	3515Q	#7 Quintuplex	Tritan/Wheatley	5127SS
51920	3515Q	#8 Quintuplex		
51925	3515Q	#9 Quintuplex		
51930	3515Q	#10 Quintuplex		
51740	3015W	#7 Triplex	Weatherford	FE85
51745	3015W	#8 Triplex		
51750	3015W	#9 Triplex		
51755	3015W	#10 Triplex		
52280	3015W	#11 Triplex		
65187	3715W	#7 Triplex	Woma	1502, 1503
54560	3715W	#8 Triplex		
54555	3715W	#9 Triplex		
54550	3715W	#10 Triplex		
54545	3715W	#11 Triplex		

JETSTREAM FLUID END CONVERSIONS

FLUID END PART NO.	FLUID END MODEL	DESCRIPTION	MANUFACTURER	MANUFACTURER MODEL
55270	3715WZ	#8 Triplex	Woma	150-Z
55275	3715WZ	#9 Triplex		
55280	3715WZ	#10 Triplex		
55285	3715WZ	#11 Triplex		
51820	3015Q	#7 Quintuplex	American Aero / Whitford NLB Union	FE145 10125 QD100 (Power End)
51825	3015Q	#8 Quintuplex		
51830	3015Q	#9 Quintuplex		
51835	3015Q	#10 Quintuplex		
52285	3015Q	#11 Quintuplex		

Detailed breakdowns to follow on pages B-44 to B-94.

JETSTREAM INTERNATIONAL STYLE FLUID END CONVERSIONS

FLUID END PART NO.	FLUID END MODEL	DESCRIPTION	MANUFACTURER	EURO MODEL INCLUDES
55338	3015	#7 Triplex	Jetstream	Euro Lube Harness Dual Scale Gauge Euro Regulator Valve Pump Accessory Package Spare Parts & Tools Package
55186	3015J	#8 Triplex		
55339	3015	#9 Triplex		
55340	3015	#10 Triplex		
55341	3015	#11 Triplex		
55343	3615	#9 Triplex		
55190	3615J HF	#10 Triplex		
55344	3615	#11 Triplex		
55345	3615	#12 Triplex		
55346	3615	#13 Triplex		
55347	3615	#15 Triplex		
55348	3615	#16 Triplex		
55351	4215	#9 Triplex		
55352	4215	#10 Triplex		
55194	4215J HF	#11 Triplex		
55198	4215J HF	#12 Triplex		
55353	4215	#13 Triplex		
55354	4215	#15 Triplex		
57345	4215J HF	#15 Triplex		
55355	4215	#16 Triplex		

BUTTERWORTH/GARDER DENVER UPGRADES

MODEL 3015B

UNX™ FLUID END UPGRADE
BUTTERWORTH | GARDNER-DENVER
T-300, L-300, L-74, I-300, PT-33 PUMPS

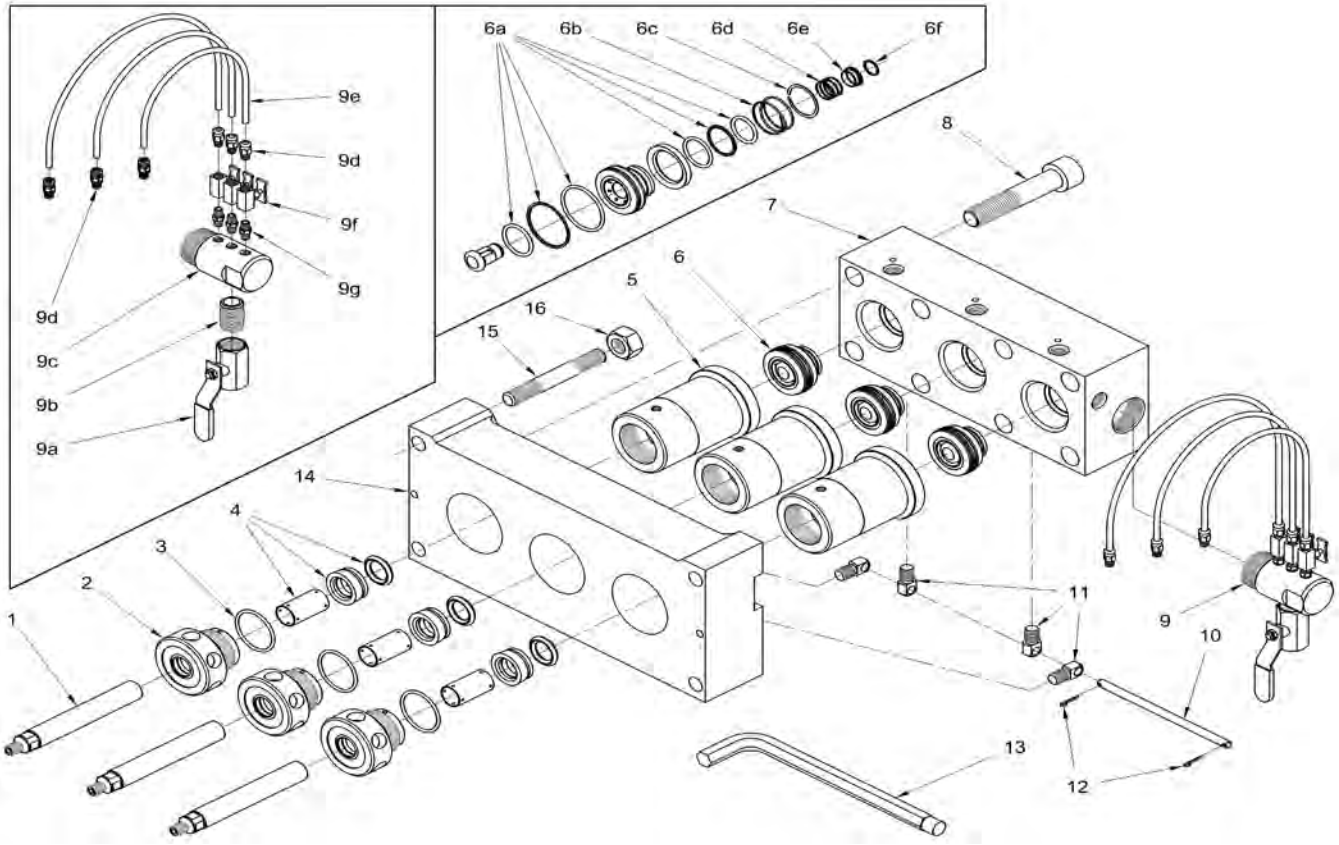

FLUID END SPECS

PART NO.	PLUNGER SIZE			CONNECTION TYPES			PUMP DISPLACEMENT AT SPECIFIED PUMP SPEEDS*								MAX. OPERATING PRESSURE	
	NO.	DIAMETER					200 RPM		300 RPM		400 RPM		500 RPM			
		in	mm	TOP PORTS	DISCHARGE PORTS	SUPPLY PORT	gpm	lpm	gpm	lpm	gpm	lpm	gpm	lpm	psi	bar
51700	7	.735	18.67	1/2" NPT Female	1/2" NPT Female	1 - 1/2" NPT Female	5.0	19	6.6	25	8.3	31	9.9	37	15,000	1034
51705	8	.800	20.32				5.9	22	7.8	30	9.8	37	11.8	45	12,500	861
51710	9	.900	22.86				7.4	28	9.9	38	12.4	47	14.9	56	10,000	689
51715	10	1.000	25.40				9.2	35	12.2	46	15.3	58	18.4	70	8,000	551
52290	11	1.125	28.50				11.6	44	15.5	59	19.4	73	23.2	88	6,000	413

* Displacement (flow) values represented refer to "theoretical" flow, neglecting inefficiency resulting from compressibility of water and expansion of pressure bearing components. Performance data is based on power end specifications published by the original equipment manufacturer; however, some power ends may differ from those used to determine the values above. Contact a Jetstream Solutions Provider for help with fluid end selection.

PART BREAKDOWN

ITEM	PART NO.	DESCRIPTION	ITEM	PART NO.	DESCRIPTION
1	51690	#7 Plunger	6c	26470	Retaining Ring
	51696	#8 Plunger	6d	26472	Suction Valve Spring
	51667	#9 Plunger	6e	51664	Spring Retainer
	51694	#10 Plunger	6f	26474	Retaining Ring
	52983	#11 Plunger	7	51672	Manifold
2	51617	#7 Gland Nut	8	26462	Manifold Bolt
	51619	#8 Gland Nut	9	51695	Lube Harness
	51621	#9 Gland Nut	9a	27101	Ball Valve
	51623	#10 Gland Nut	9b	25946	Nipple
	52231	#11 Gland Nut	9c	53242	Lube Manifold
3	56416	O-Ring	9d	27732	Hose Fitting
4	51689	#7 Packing Set	9e	27740	Hose (Order in feet)
	51691	#8 Packing Set	9f	27475	Needle Valve
	51674	#9 Packing Set	9g	26465	Nipple
	51697	#10 Packing Set	10	51666	Trunnion Rod
	52233	#11 Packing Set	11	51659	Trunnion
5	51611	#7, #8 Stuffing Box	12	26468	Cotter Pin
	51671	#9, #10 Stuffing Box	13	50064	Pump Wrench
	52232	#11 Stuffing Box	14	51673	Adapter Plate
6	51675	Uni-Valve	15	26473	Adapter Plate Stud
6a	50034	Uni-Valve Seal Kit	16	25706	Adapter Plate Nut
6b	26476	Discharge Valve Spring	17*	62171-GRN	Manifold Decal

*Not shown.

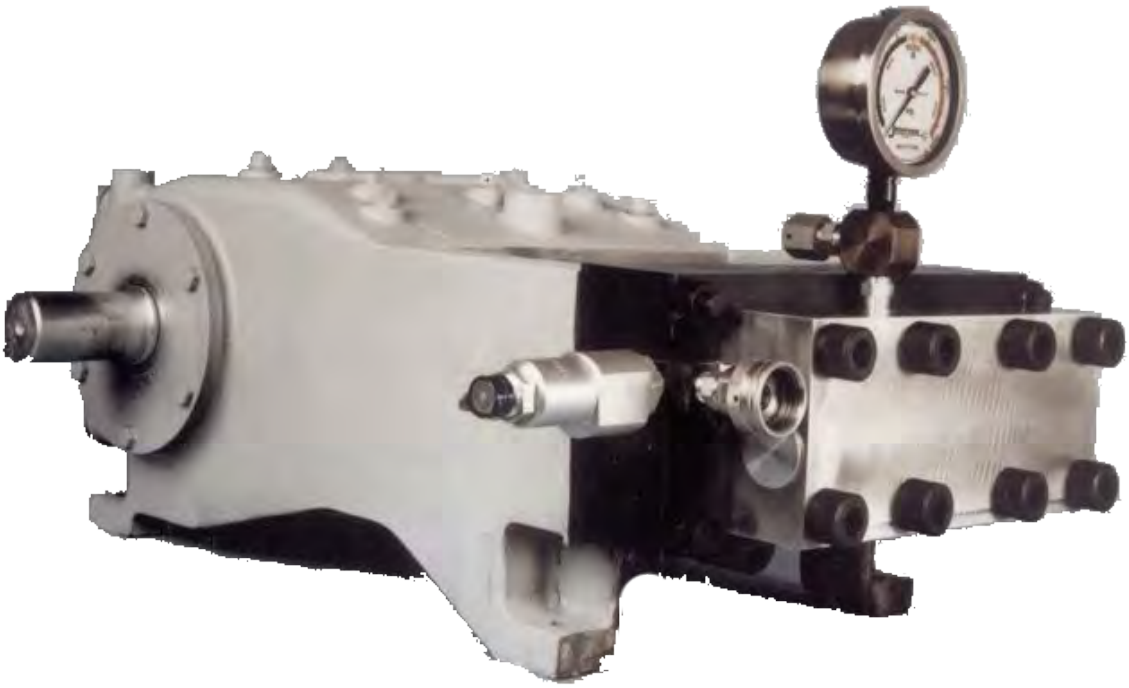

MODEL 3715B

UNX™ FLUID END UPGRADE
BUTTERWORTH | GARDNER-DENVER
L-375, T-375, I-375, TF-375, L-130, TX-375, TX-3750H PUMPS

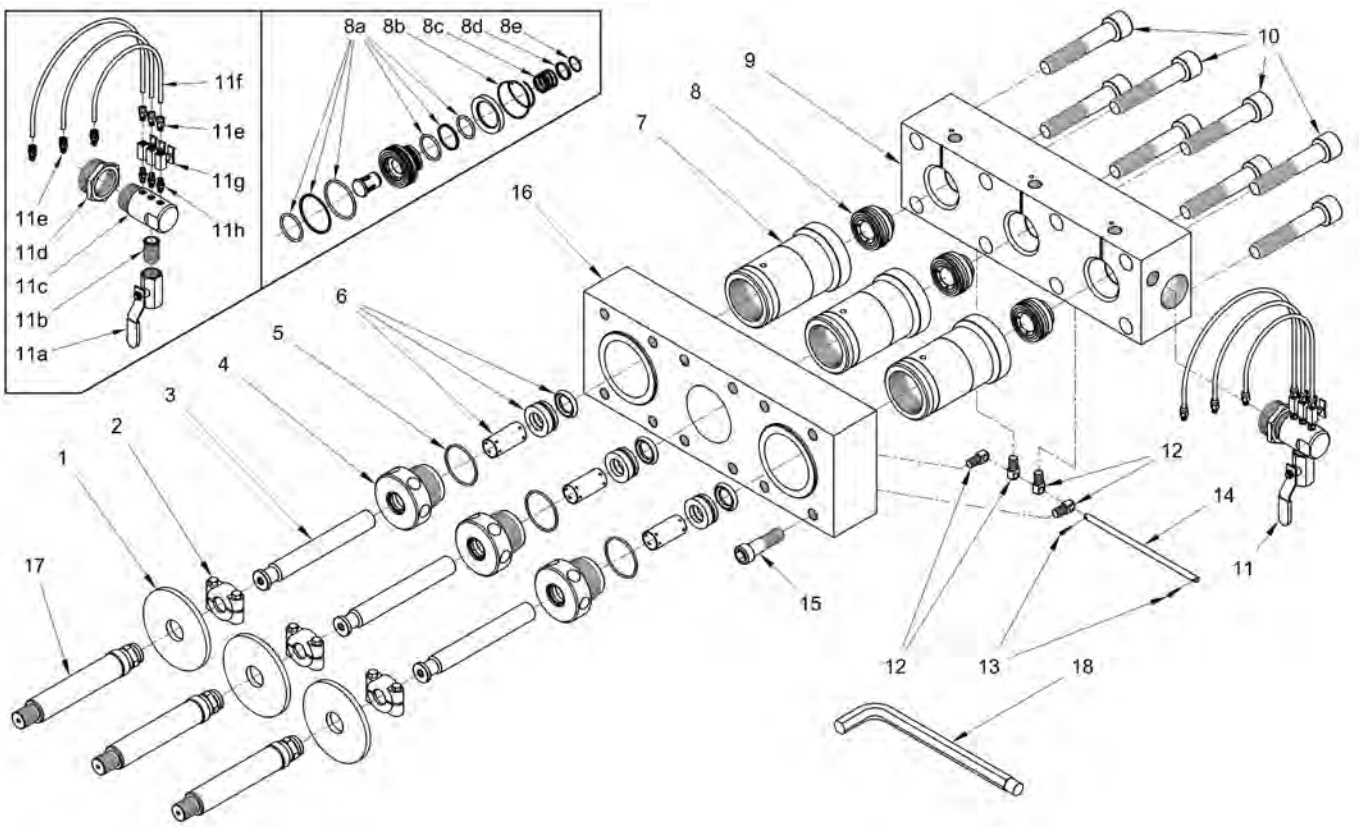

FLUID END SPECS

PART NO.	PLUNGER SIZE			CONNECTION TYPES			PUMP DISPLACEMENT AT SPECIFIED PUMP SPEEDS*								MAX. OPERATING PRESSURE	
	NO.	DIAMETER					300 RPM		400 RPM		500 RPM		575 RPM			
		in	mm	TOP PORTS	DISCHARGE PORTS	SUPPLY PORT	gpm	lpm	gpm	lpm	gpm	lpm	gpm	lpm	psi	bar
52225	9	.900	22.86	3/4" NPT Female	1/2" NPT Female	2" NPT Female	9.3	35	12.4	47	15.5	59	17.8	67	15,000	1034
52230	#0	.980	24.89				11.0	42	14.7	56	18.4	70	21.1	80	12,500	861
52235	11	1.100	27.94				13.9	53	18.5	70	23.2	88	26.6	101	10,000	689
52240	12	1.200	30.48				16.5	63	22.0	83	27.6	104	31.7	120	8,000	551
52245	13	1.335	33.91				20.5	77	27.3	103	34.1	129	39.2	148	6,000	413

* Displacement (flow) values represented refer to "theoretical" flow, neglecting inefficiency resulting from compressibility of water and expansion of pressure bearing components. Performance data is based on power end specifications published by the original equipment manufacturer; however, some power ends may differ from those used to determine the values above. Contact a Jetstream Solutions Provider for help with fluid end selection.

PART BREAKDOWN

ITEM	PART NO.	DESCRIPTION	ITEM	PART NO.	DESCRIPTION
1	26487	Deflector	8c	25059	Suction Valve Spring
2	51736	Plunger Coupling	8d	50303	Spring Retainer
3	51808	#9 Plunger	8e	25255	Retaining Ring
	51721	#10 Plunger	9	52194	Manifold
	51722	#11 Plunger	10	25607	Manifold Bolt
	51723	#12 Plunger	11	51955	Lube Harness
	51724	#13 Plunger	11a	27101	Ball Valve
4	51809	#9 Gland Nut	11b	25946	Nipple
	51647	#10 Gland Nut	11c	53242	Lube Manifold
	51651	#11 Gland Nut	11d	26802	Reducing Bushing
	51707	#12 Gland Nut	11e	27732	Hose Fitting
	51744	#13 Gland Nut	11f	27740	Hose (Order in feet)
5	26387	O-Ring	11g	27475	Needle Valve
6	51802	#9 Packing Set	11h	26465	Nipple
	50658	#10 Packing Set	12	51659	Trunnion
	50659	#11 Packing Set	13	26468	Cotter Pin
	50660	#12 Packing Set	14	50295	Trunnion Rod
	50661	#13 Packing Set	15	26220	Adapter Plate Bolt
7	50297	#9, #10, #11 Stuffing Box	16	52197	Adapter Plate
	50299	#12, #13 Stuffing Box	17	52196	Plunger Adapter
8	50365	Uni-Valve	18	50889	Pump Wrench
8a	50370	Uni-Valve Seal Kit	19*	62171-GRN	Manifold Decal
8b	25060	Discharge Valve Spring			

*Not shown.

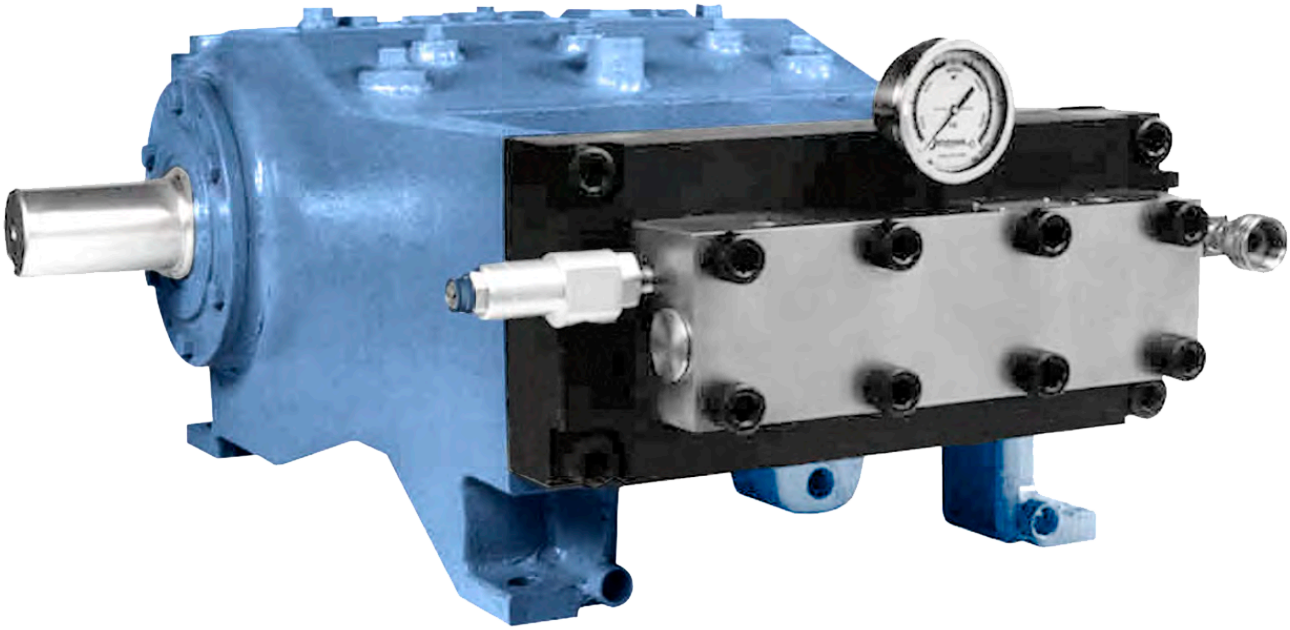

MODEL 4015B

UNX™ FLUID END UPGRADE
BUTTERWORTH | GARDNER-DENVER
L-77 PUMP

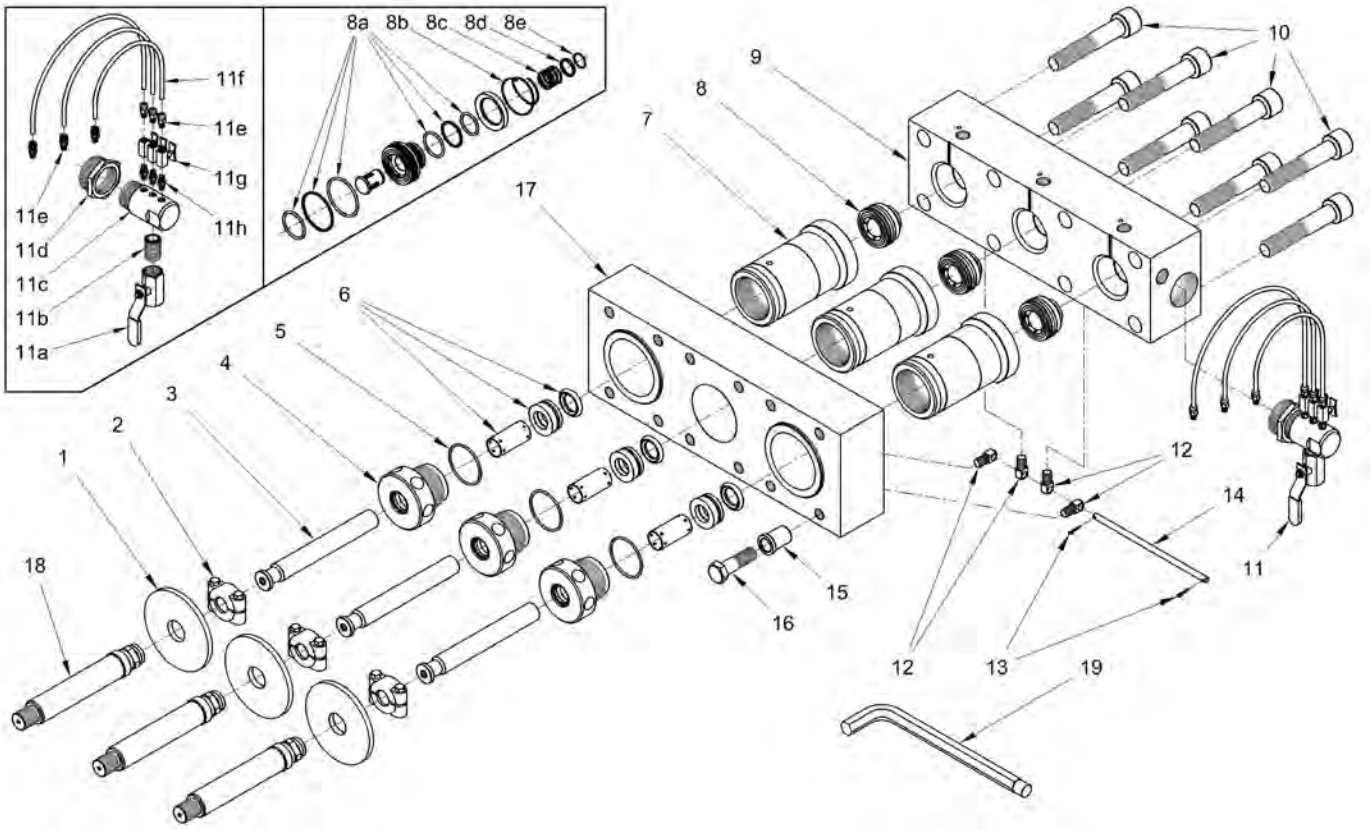

FLUID END SPECS

PART NO.	PLUNGER SIZE			CONNECTION TYPES			PUMP DISPLACEMENT AT SPECIFIED PUMP SPEEDS*								MAX. OPERATING PRESSURE	
	NO.	DIAMETER					200 RPM		300 RPM		400 RPM		500 RPM			
		in	mm	TOP PORTS	DISCHARGE PORTS	SUPPLY PORT	gpm	lpm	gpm	lpm	gpm	lpm	gpm	lpm	psi	bar
51950	9	.900	22.86	3/4" NPT Female	1/2" NPT Female	2" NPT Female	6.6	25	9.9	38	13.2	50	16.5	63	15,000	1034
51865	10	.980	24.89				11.8	45	15.7	59	19.6	74	19.6	74	12,500	861
51870	11	1.100	27.94				14.8	56	19.8	75	24.7	93	24.7	93	10,000	689
51875	12	1.200	30.48				17.6	67	23.5	89	29.4	111	29.2	111	8,000	551
51880	13	1.335	33.91				21.8	83	29.1	110	36.4	138	36.4	138	6,000	413

* Displacement (flow) values represented refer to "theoretical" flow, neglecting inefficiency resulting from compressibility of water and expansion of pressure bearing components. Performance data is based on power end specifications published by the original equipment manufacturer; however, some power ends may differ from those used to determine the values above. Contact a Jetstream Solutions Provider for help with fluid end selection.

PART BREAKDOWN

ITEM	PART NO.	DESCRIPTION	ITEM	PART NO.	DESCRIPTION
1	26487	Deflector	8c	25059	Suction Valve Spring
2	51736	Plunger Coupling	8d	50303	Spring Retainer
3	51808	#9 Plunger	8e	25255	Retaining Ring
	51721	#10 Plunger	9	51288	Manifold
	51722	#11 Plunger	10	25607	Manifold Bolt
	51723	#12 Plunger	11	51955	Lube Harness
	51724	#13 Plunger	11a	27101	Ball Valve
4	51809	#9 Gland Nut	11b	25946	Nipple
	51647	#10 Gland Nut	11c	53242	Lube Manifold
	51651	#11 Gland Nut	11d	26802	Reducing Bushing
	51707	#12 Gland Nut	11e	27732	Hose Fitting
	51744	#13 Gland Nut	11f	27740	Hose (Order in feet)
5	26387	O-Ring	11g	27475	Needle Valve
6	51802	#9 Packing Set	11h	26465	Nipple
	50658	#10 Packing Set	12	51659	Trunnion
	50659	#11 Packing Set	13	26468	Cotter Pin
	50660	#12 Packing Set	14	50295	Trunnion Rod
	50661	#13 Packing Set	15	50115	Adapter Plate Spacer
7	50297	#9, #10, #11 Stuffing Box	16	26494	Adapter Plate Bolt
	50299	#12, #13 Stuffing Box	17	51287	Adapter Plate
8	50365	Uni-Valve	18	51556	Plunger Adapter
8a	50370	Uni-Valve Seal Kit	19	50889	Pump Wrench
8b	25060	Discharge Valve Spring			

MODEL 4515B

UNX™ FLUID END UPGRADE
BUTTERWORTH | GARDNER-DENVER
L-450, T-450, TF-450, L-200 PUMPS

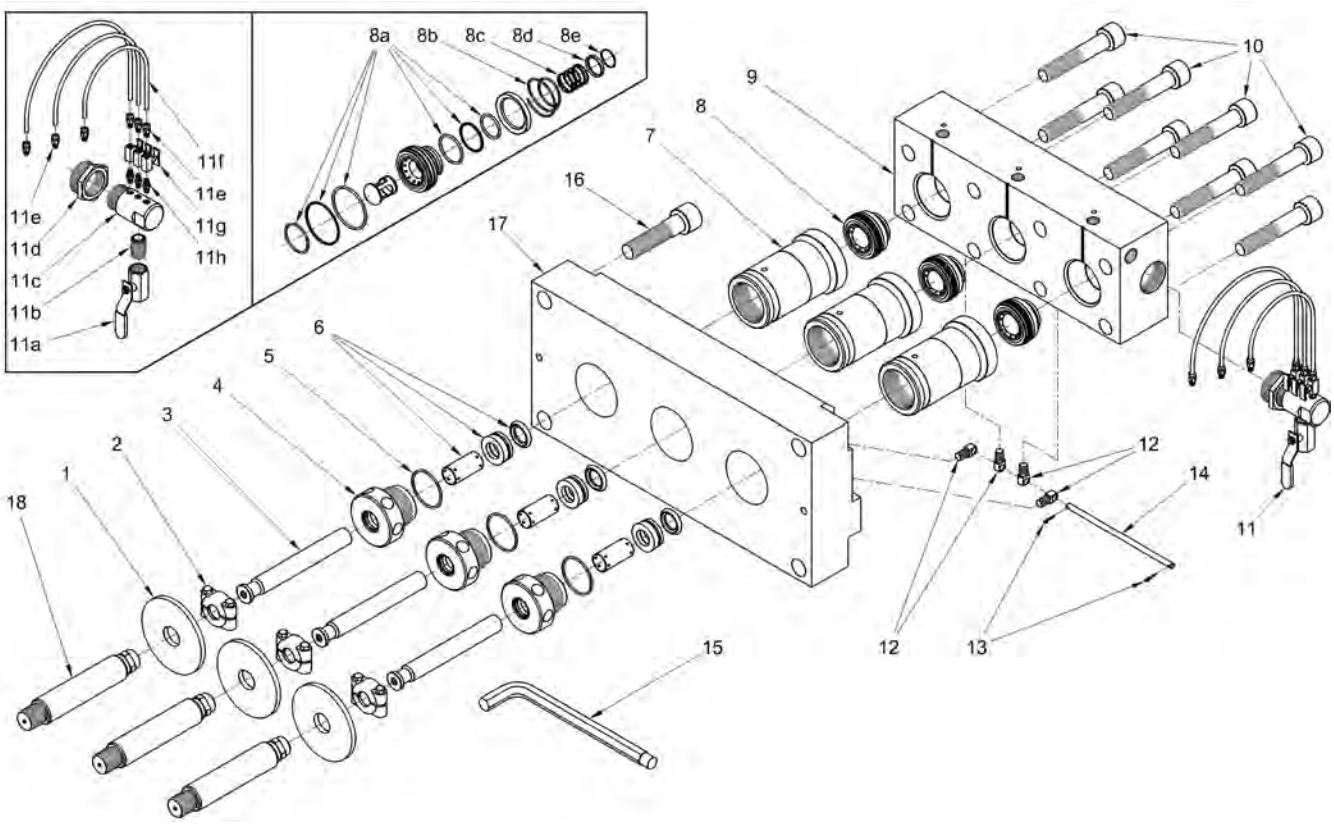

FLUID END SPECS

PART NO.	PLUNGER SIZE			CONNECTION TYPES			PUMP DISPLACEMENT AT SPECIFIED PUMP SPEEDS*								MAX. OPERATING PRESSURE	
	NO.	DIAMETER					200 RPM		300 RPM		400 RPM		500 RPM			
		in	mm	TOP PORTS	DISCHARGE PORTS	SUPPLY PORT	gpm	lpm	gpm	lpm	gpm	lpm	gpm	lpm	psi	bar
51840	10	.980	24.89	3/4" NPT Female	1/2" NPT Female	2" NPT Female	8.8	33	13.2	50	17.6	67	22.1	84	15,000	1034
51845	11	1.10	27.94				11.1	42	16.7	63	22.2	84	27.8	105	15,000	1034
51850	12	1.200	30.48				13.2	50	19.8	75	26.4	100	33.1	125	15,000	1034
51855	13	1.335	33.91				16.4	62	24.6	93	32.7	124	40.9	155	12,000	827
51860	15	1.500	38.10				20.7	78	31.0	117	41.3	156	51.7	196	10,000	689
J55775	16	1.670	42.42				25.6	97	38.4	145	51.2	194	64.0	242	8,000	551

* Displacement (flow) values represented refer to "theoretical" flow, neglecting inefficiency resulting from compressibility of water and expansion of pressure bearing components. Performance data is based on power end specifications published by the original equipment manufacturer; however, some power ends may differ from those used to determine the values above. Contact a Jetstream Solutions Provider for help with fluid end selection.

PART BREAKDOWN

ITEM	PART NO.	DESCRIPTION	ITEM	PART NO.	DESCRIPTION
1	26487	Deflector	8	52870	Uni-Valve
2	51736	Plunger Coupling	8a	52875	Uni-Valve Seal Kit
3	51721	#10 Plunger	8b	27119	Discharge Valve Spring
	51722	#11 Plunger	8c	27118	Suction Valve Spring
	51723	#12 Plunger	8d	52879	Spring Retainer
	51724	#13 Plunger	8e	52878	Retaining Ring
	51726	#15 Plunger	9	52866	Manifold
	53314	#16 Plunger	10	25607	Manifold Bolt
4	51647	#10 Gland Nut	11	51955	Lube Harness
	51651	#11 Gland Nut	11a	27101	Ball Valve
	51707	#12 Gland Nut	11b	25946	Nipple
	51744	#13 Gland Nut	11c	53242	Lube Manifold
	51746	#15 Gland Nut	11d	26802	Reducing Bushing
	53316	#16 Gland Nut	11e	27732	Hose Fitting
5	26387	O-Ring (#9 to #15 Gland Nut)	11f	27740	Hose (Order in feet)
	26930	O-Ring (#16 Gland Nut)	11g	27475	Needle Valve
6	50658	#10 Packing Set	11h	26465	Nipple
	50659	#11 Packing Set	12	51659	Trunnion
	50660	#12 Packing Set	13	26468	Cotter Pin
	50661	#13 Packing Set	14	50295	Trunnion Rod
	50662	#15 Packing Set	15	50889	Pump Wrench
	53321	#16 Packing Set	16	26212	Adapter Plate Bolt
7	52869	#10, #11 Stuffing Box	17	51714	Adapter Plate
	52871	#12, #13, #15 Stuffing Box	18	51719	Crosshead Stub
	J55773	#16 Stuffing Box			

NOTE: Parts listed on this page are for current 4515B fluid end models. For first generation fluid end models, which utilize different stuffing boxes, valves, and manifold, see the following page. Models can be most easily distinguished by the part number stamped on the top face of the fluid end manifold. Current models use manifold part number 52866 while first generation fluid ends use manifold part number 51718.

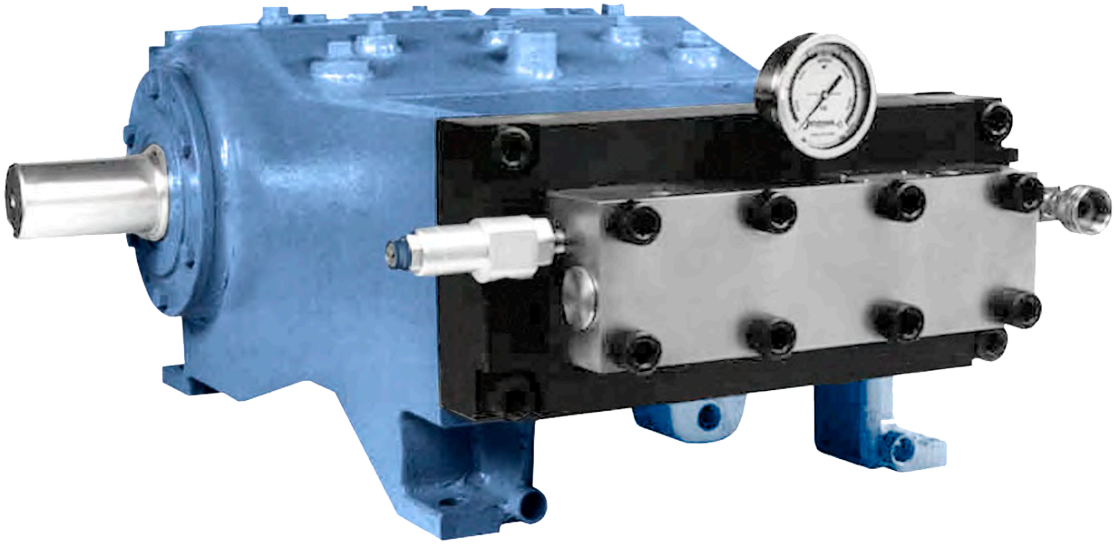

MODEL 4515B (GEN 1)

UNX™ FLUID END UPGRADE
BUTTERWORTH | GARDNER-DENVER
L-450, T-450, TF-450, L-200 PUMPS

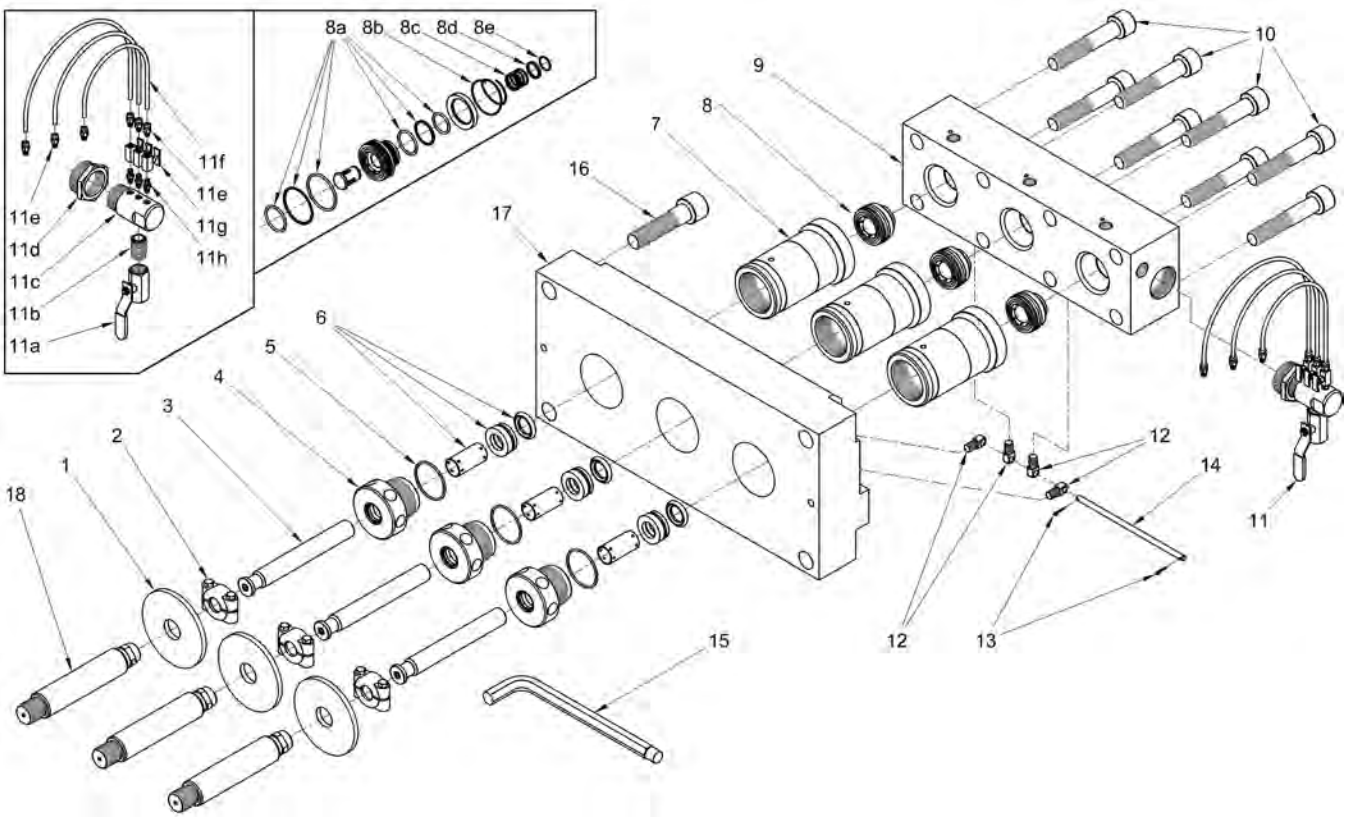

PART BREAKDOWN

ITEM	PART NO.	DESCRIPTION	ITEM	PART NO.	DESCRIPTION
1	26487	Deflector	8b	25060	Discharge Valve Spring
2	51736	Plunger Coupling	8c	25059	Suction Valve Spring
3	51721	#10 Plunger	8d	50303	Spring Retainer
	51722	#11 Plunger	8e	25255	Retaining Ring
	51723	#12 Plunger	9	51718	Manifold
	51724	#13 Plunger	10	25607	Manifold Bolt
	51726	#15 Plunger	11	51955	Lube Harness
4	51647	#10 Gland Nut	11a	27101	Ball Valve
	51651	#11 Gland Nut	11b	25946	Nipple
	51707	#12 Gland Nut	11c	53242	Lube Manifold
	51744	#13 Gland Nut	11d	26802	Reducing Bushing
	51746	#15 Gland Nut	11e	27732	Hose Fitting
5	26387	O-Ring	11f	27740	Hose (Order in feet)
6	50658	#10 Packing Set	11g	27475	Needle Valve
	50659	#11 Packing Set	11h	26465	Nipple
	50660	#12 Packing Set	12	51659	Trunnion
	50661	#13 Packing Set	13	26468	Cotter Pin
	50662	#15 Packing Set	14	50295	Trunnion Rod
7	51716	#10, #11 Stuffing Box	15	50889	Pump Wrench
	51717	#12, #13, #15 Stuffing Box	16	26212	Adapter Plate Bolt
8	50365	Uni-Valve	17	51714	Adapter Plate
8a	50370	Uni-Valve Seal Kit	18	51719	Crosshead Stud

NOTE: Parts listed on this page are for first generation 4515B fluid end models no longer sold. These models utilize different stuffing boxes, valves, and manifold than the current design. Models can be most easily distinguished by the part number stamped on the top face of the fluid end manifold. Current models use manifold part number 52866 while first generation fluid ends featured on this page use manifold part number 51718.

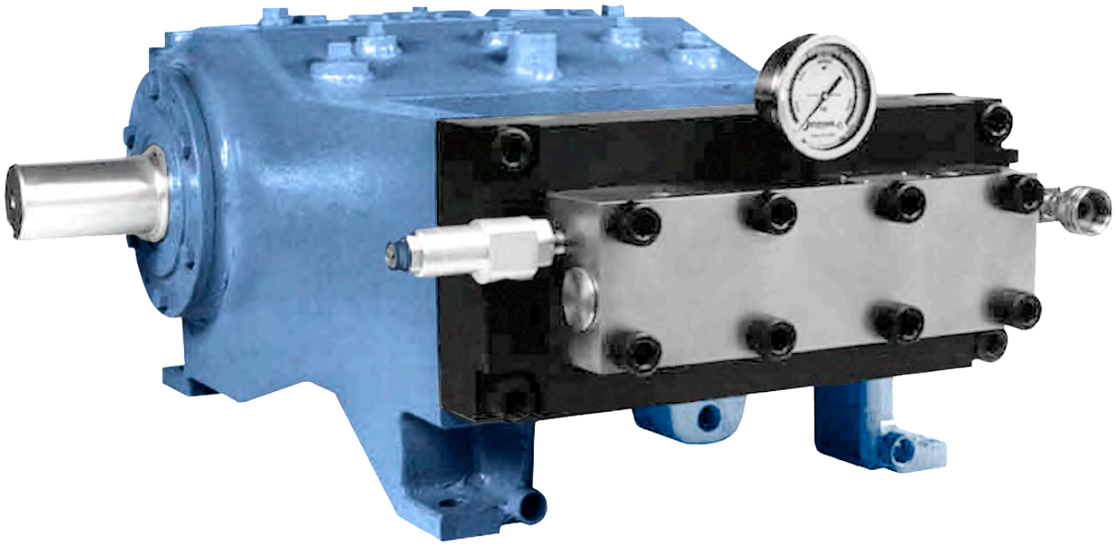

MODEL 4515BQ

UNX™ FLUID END UPGRADE
BUTTERWORTH | GARDNER-DENVER
QF450S PUMP

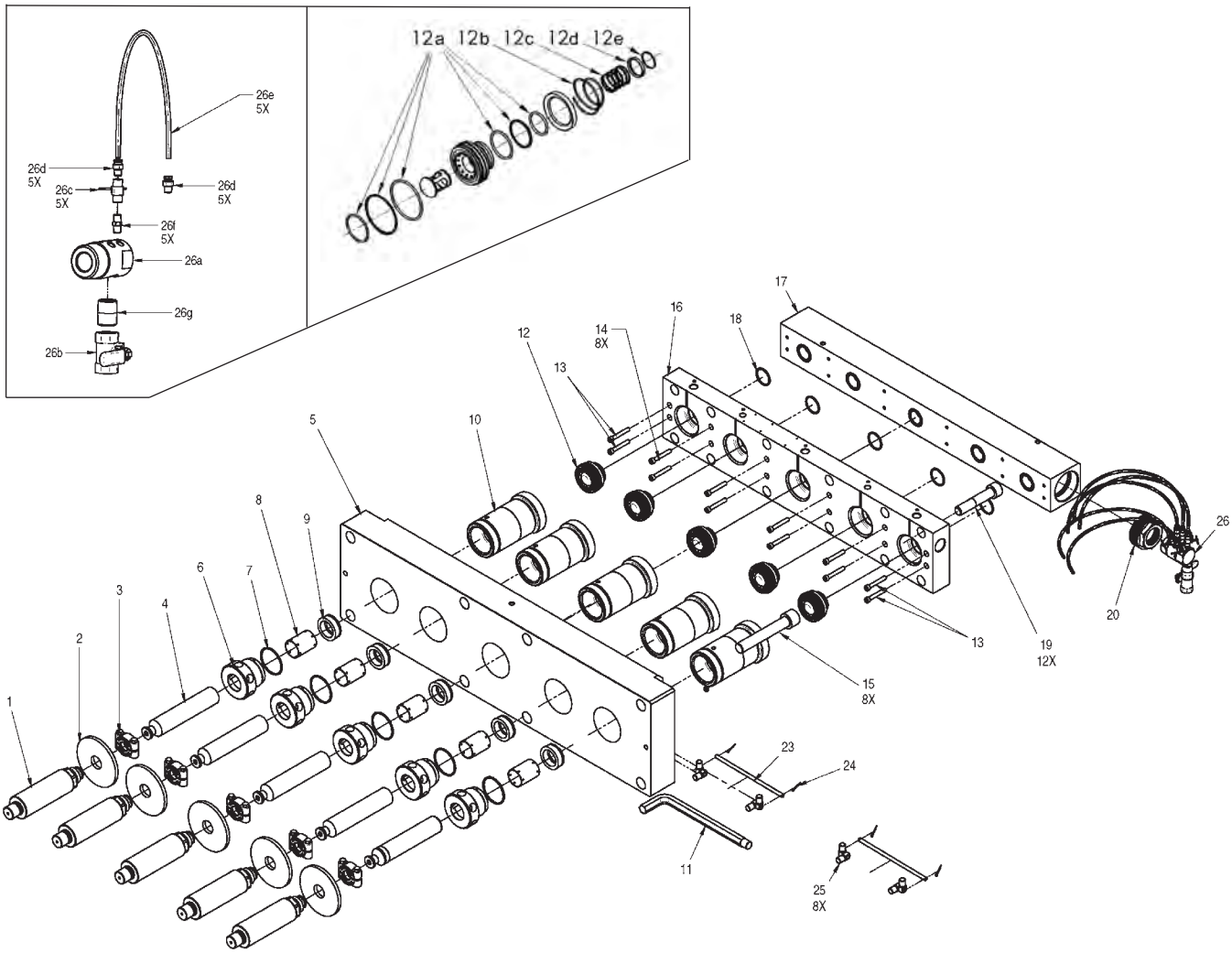

FLUID END SPECS

PART NO.	PLUNGER SIZE NO.	PLUNGER SIZE DIAMETER in	PLUNGER SIZE DIAMETER mm	CONNECTION TYPES: TOP PORTS	CONNECTION TYPES: DISCHARGE PORTS	CONNECTION TYPES: SUPPLY PORT	PUMP DISPLACEMENT AT SPECIFIED PUMP SPEEDS* 200 RPM gpm	200 RPM lpm	400 RPM gpm	400 RPM lpm	500 RPM gpm	500 RPM lpm	MAX. OPERATING PRESSURE psi	MAX. OPERATING PRESSURE bar
67132	19	1.875	47.63	1/2" NPT Female	Jetstream HHP	3" NPT Female	53.8	204	107.6	407	134.5	509	7,000	483

* Displacement (flow) values represented refer to "theoretical" flow, neglecting inefficiency resulting from compressibility of water and expansion of pressure bearing components. Performance data is based on power end specifications published by the original equipment manufacturer; however, some power ends may differ from those used to determine the values above. Contact a Jetstream Solutions Provider for help with fluid end selection.

PART BREAKDOWN

ITEM	PART NO.	DESCRIPTION	ITEM	PART NO.	DESCRIPTION
1	51719	Crosshead Stud	14	J70684	Capscrew
2	26487	Deflector	15	26212	Adapter Plate Bolt
3	51736	Plunger Coupling	16	67115	Manifold
4	67170	#19 Plunger	17	67133	Suction Manifold
5	67114	Adapter Plate	18	25165	O-Ring
6	67284	#19 Gland Nut	19	27550	Manifold Bolt
7	68030	O-Ring	20	67322	Reducer Bushing
8	67264	#19 Bushing Guide	23	50295	Trunnion Rod
9	67276	#19 Packing Ring	24	26468	Cotter Pin
10	67160	#19 Stuffing Box	25	51659	Trunnion
11	50889	Pump Wrench	26	67285	Lube Harness
12	52870	Uni-Valve	26a	53793	Lube Manifold
12a	52875	Uni-Valve Seal Kit	26b	27101	Ball Valve
12b	27119	Discharge Valve Spring	26c	27475	Needle Valve
12c	27118	Suction Valve Spring	26d	26874	Hose Fitting
12d	52879	Spring Retainer	26e	26469	Hose (Order in feet)
12e	52878	Retaining Ring	26f	26465	Nipple
13	27551	Capscrew	26g	25946	Nipple

MODEL 5015G

UNX™ FLUID END UPGRADE
BUTTERWORTH | GARDNER-DENVER
PE-5, P172 PUMPS

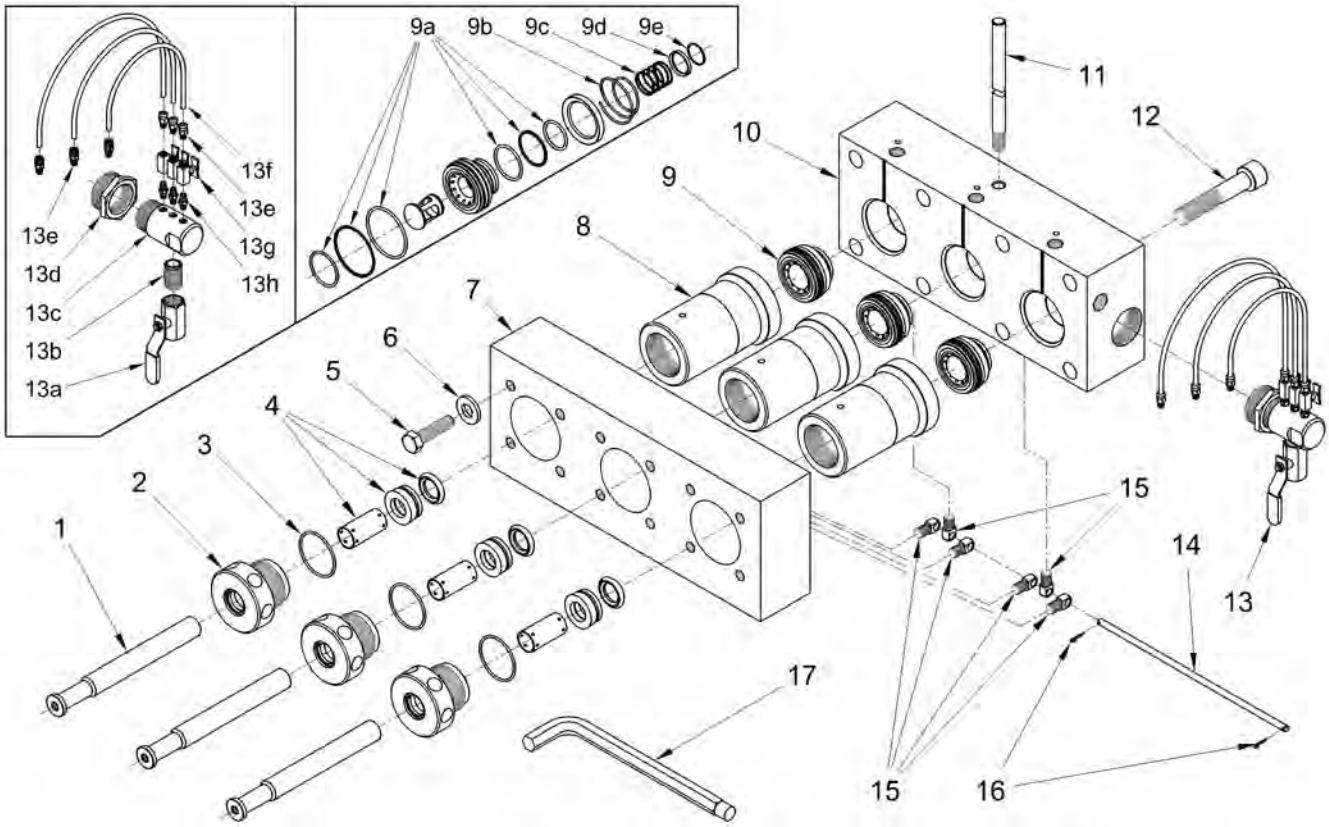

FLUID END SPECS

PART NO.	PLUNGER SIZE			CONNECTION TYPES			PUMP DISPLACEMENT AT SPECIFIED PUMP SPEEDS*						MAX. OPERATING PRESSURE	
	NO.	DIAMETER					150 RPM		200 RPM		300 RPM			
		in	mm	TOP PORTS	DISCHARGE PORTS	SUPPLY PORT	gpm	lpm	gpm	lpm	gpm	lpm	psi	bar
52170	15	1.500	38.10	3/4" NPT Female	1/2" NPT Female	2 - 1/2"" NPT Female	17.2	65	23.0	87	23.0	87	15,000	1034

* Displacement (flow) values represented refer to "theoretical" flow, neglecting inefficiency resulting from compressibility of water and expansion of pressure bearing components. Performance data is based on power end specifications published by the original equipment manufacturer; however, some power ends may differ from those used to determine the values above. Contact a Jetstream Solutions Provider for help with fluid end selection.

PART BREAKDOWN

ITEM	PART NO.	DESCRIPTION	ITEM	PART NO.	DESCRIPTION
1	52092	#15 Plunger	10	52097	Manifold
	50378	#17 Plunger	11	52114	Lifting Rod
2	52121	#15 Gland Nut	12	26732	Manifold Bolt
	52122	#17 Gland Nut	13	54895	Lube Harness
3	26734	O-Ring	13a	27101	Ball Valve
4	52111	#15 Packing Set	13b	25946	Nipple
	52112	#17 Packing Set	13c	53242	Lube Manifold
5	26836	Adapter Plate Bolt	13d	27729	Bushing
6	52104	Washer	13e	26874	Hose Fitting
7	52098	Adapter Plate	13f	26469	Hose (Order in feet)
8	52099	Stuffing Box	13g	27475	Needle Valve
9	52180	Uni-Valve	13h	26465	Nipple
9a	52118	Uni-Valve Seal Kit	14	52117	Trunnion Rod
9b	26737	Discharge Valve Spring	15	51659	Trunnion
9c	26735	Suction Valve Spring	16	26468	Cotter Pin
9d	52102	Spring Retainer	17	50889	Pump Wrench
9e	26733	Retaining Ring			

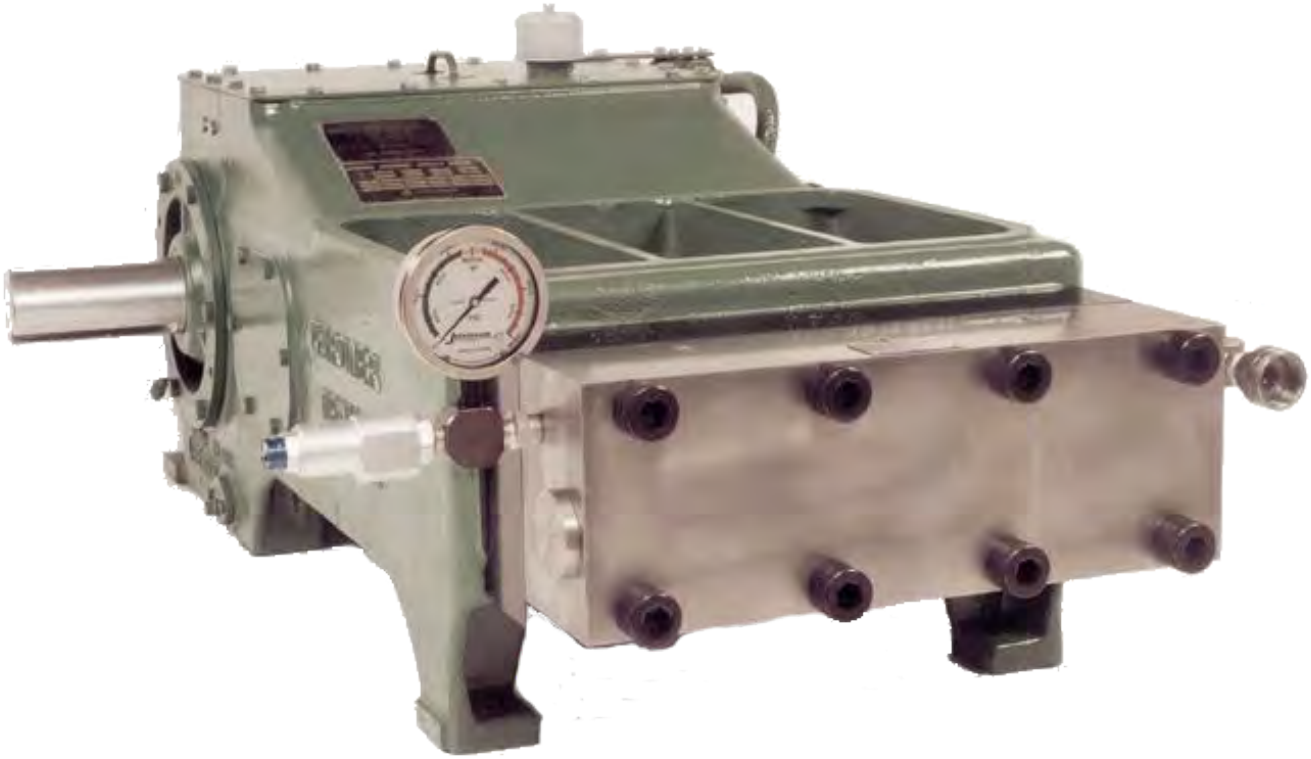

NLB UPGRADES

MODEL 3015NC

UNX™ FLUID END UPGRADE
NLB 8125, 10145, 125 SERIES PUMPS

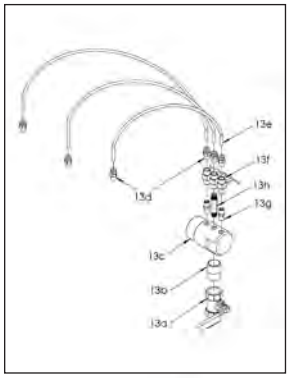

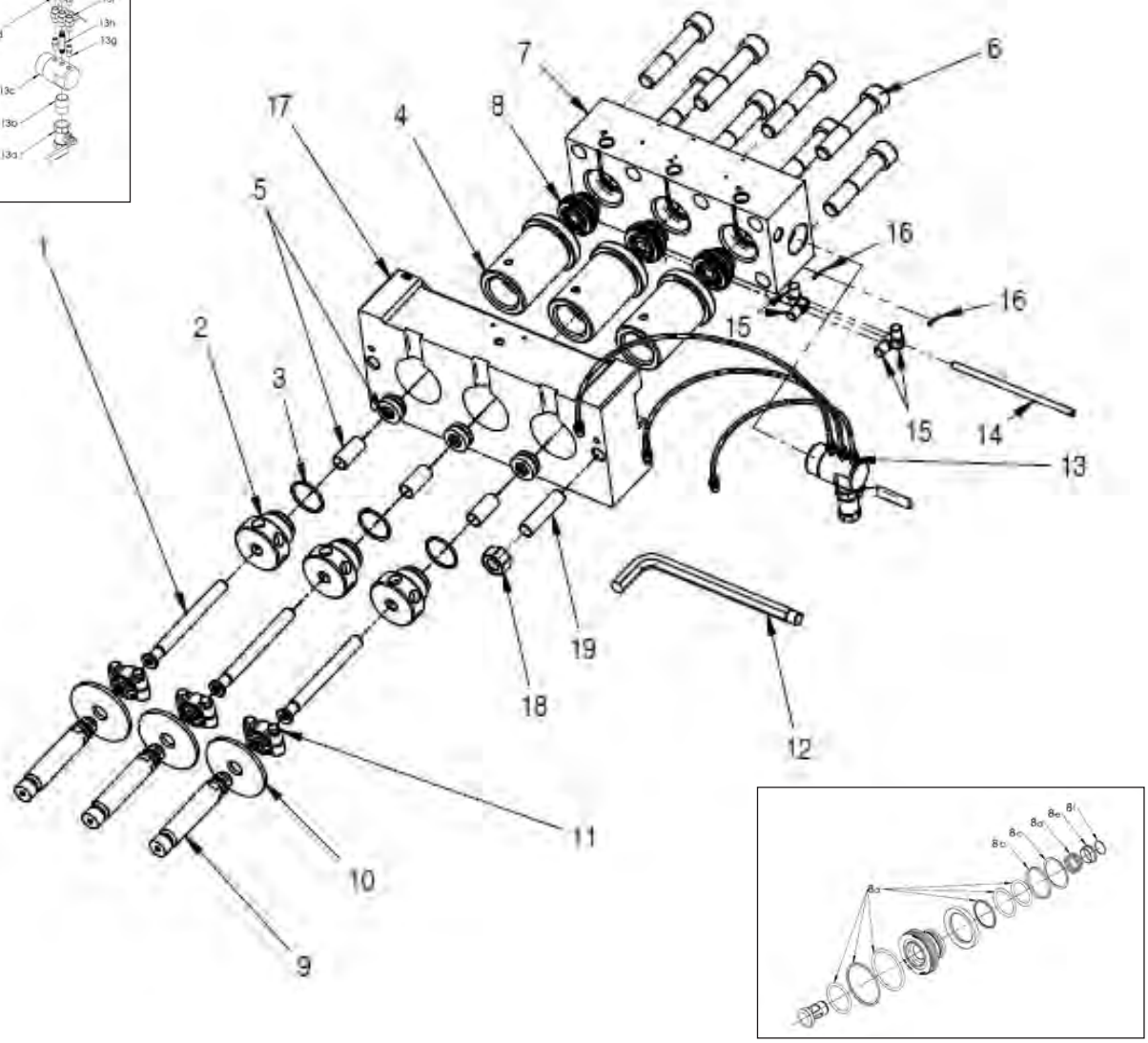

FLUID END SPECS

PART NO.	PLUNGER SIZE			CONNECTION TYPES			PUMP DISPLACEMENT AT SPECIFIED PUMP SPEEDS*								MAX. OPERATING PRESSURE	
	NO.	DIAMETER					200 RPM		300 RPM		400 RPM		500 RPM			
		in	mm	TOP PORTS	DISCHARGE PORTS	SUPPLY PORT	gpm	lpm	gpm	lpm	gpm	lpm	gpm	lpm	psi	bar
67583	9	.900	22.86	1/2" NPT Female	1/2" NPT Female	1-1/2" NPT Female	5.0	19	7.4	28	9.9	38	12.4	47	15,000	1034

* Displacement (flow) values represented refer to "theoretical" flow, neglecting inefficiency resulting from compressibility of water and expansion of pressure bearing components. Performance data is based on power end specifications published by the original equipment manufacturer; however, some power ends may differ from those used to determine the values above. Contact a Jetstream Solutions Provider for help with fluid end selection.

US & Canada: 800-231-8192 or 832-590-1300 | **waterblast.com**

Jetstream Subsidiary of Federal Signal Corporation

PART BREAKDOWN

ITEM	PART NO.	DESCRIPTION	ITEM	PART NO.	DESCRIPTION
1	51742	#9 Plunger	13	51970	Lube Harness
2	51621	#9 Gland Nut	13a	27101	Ball Valve
3	26416	O-Ring	13b	25946	Nipple
4	51671	#9 Stuffing Box	13c	53242	Lube Manifold
5	51674	#9 Packing Set	13d	26874	Hose Fitting
6	26462	Manifold Bolt	13e	26469	Hose (Order in feet)
7	51672	Manifold	13f	27475	Needle Valve
8	51675	Uni-Valve	13g	26465	Nipple
8a	50034	Uni-Valve Seal Kit	13h	60815	Nipple
8b	26476	Discharge Valve Spring	14	51666	Trunnion Rod
8c	26470	Retaining Ring	15	51659	Trunnion
8d	26472	Suction Valve Spring	16	26468	Cotter Pin
8e	51664	Spring Retainer	17	67625	Adapter Plate
9	67543	Crosshead Stud	18	25864	Adapter Plate Nut
10	26623	Deflector	19	67838	Adapter Plate Stud
11	51737	Plunger Coupling	20*	62171-GRN	Manifold Decal
12	50064	Pump Wrench			

*Not shown.

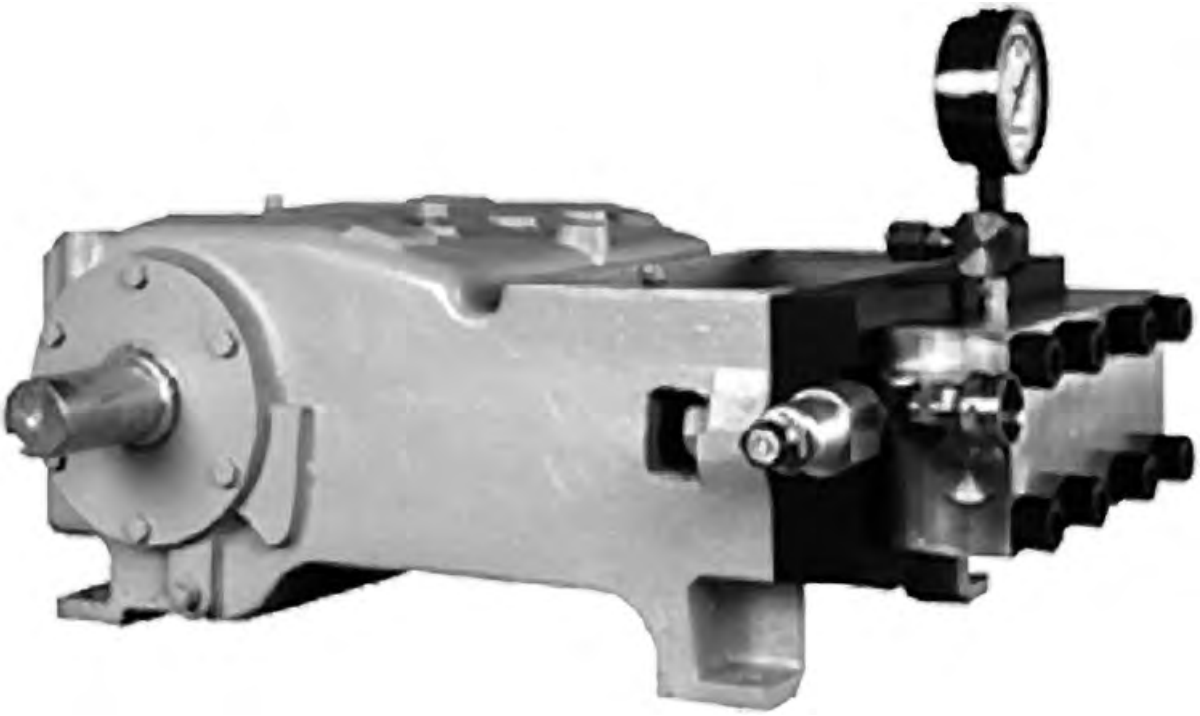

MODEL 3015N

UNX™ FLUID END UPGRADE
NLB 1012C, 1012D PUMPS

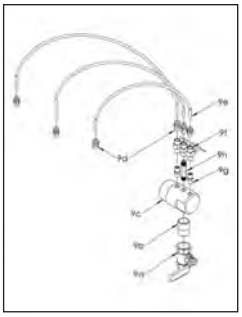

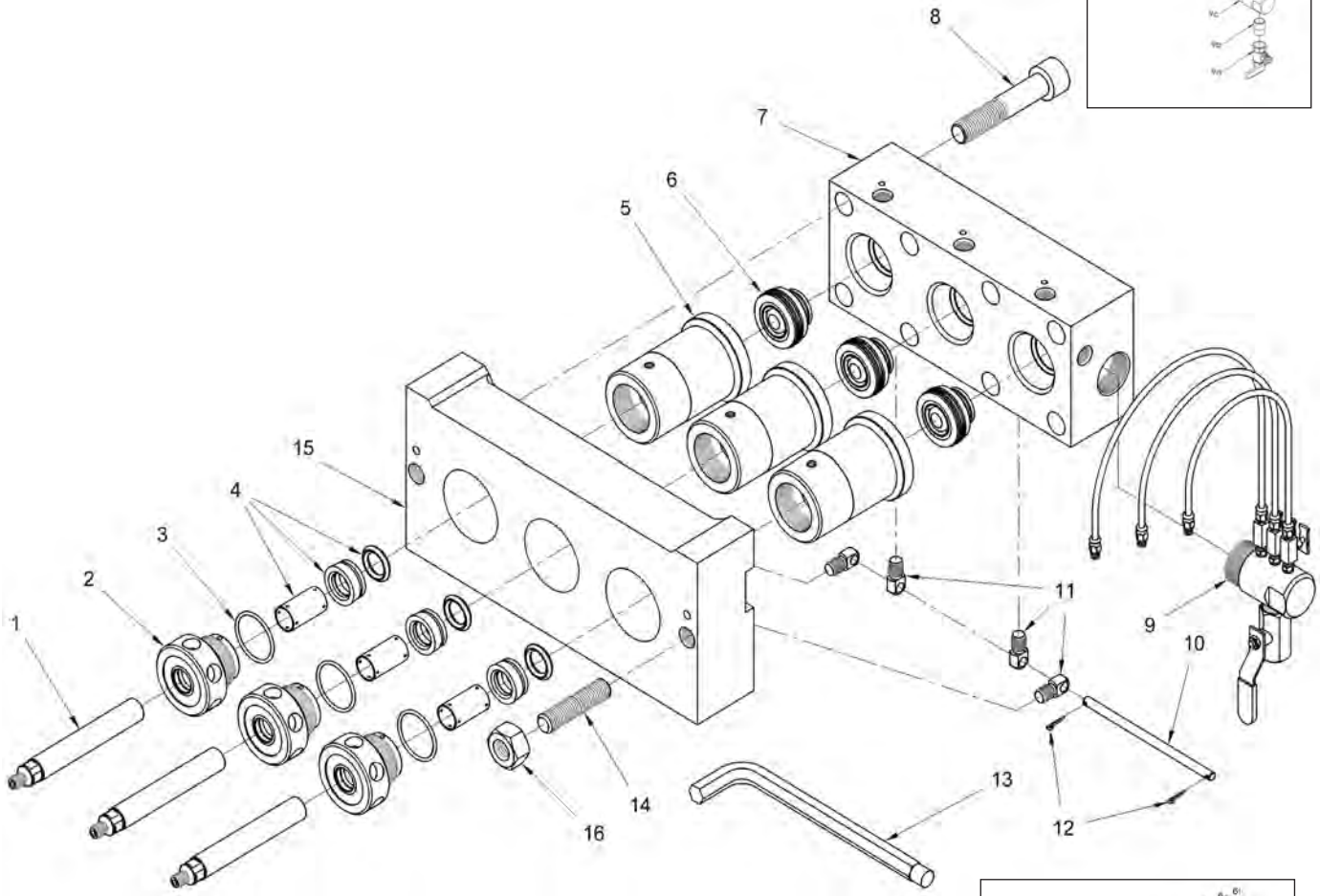

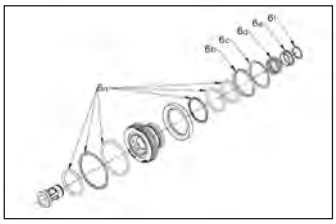

FLUID END SPECS

PART NO.	PLUNGER SIZE			CONNECTION TYPES			PUMP DISPLACEMENT AT SPECIFIED PUMP SPEEDS*								MAX. OPERATING PRESSURE	
	NO.	DIAMETER					200 RPM		300 RPM		400 RPM		500 RPM			
		in	mm	TOP PORTS	DISCHARGE PORTS	SUPPLY PORT	gpm	lpm	gpm	lpm	gpm	lpm	gpm	lpm	psi	bar
51720	7	.735	18.67	1/2" NPT Female	1/2" NPT Female	1-1/2" NPT Female	3.3	13	5.0	19	6.6	25	8.3	31	15,000	1034
51725	8	.800	20.32				3.9	15	5.9	22	7.8	30	9.8	37	15,000	1034
51730	9	.900	22.86				5.0	19	7.4	28	9.9	38	12.4	47	12,000	827
51735	10	1.000	25.40				6.1	23	9.2	35	12.2	46	15.3	58	10,000	689
52265	11	1.125	28.5				7.7	29	11.6	74	15.5	59	19.4	73	8,000	551

* Displacement (flow) values represented refer to "theoretical" flow, neglecting inefficiency resulting from compressibility of water and expansion of pressure bearing components. Performance data is based on power end specifications published by the original equipment manufacturer; however, some power ends may differ from those used to determine the values above. Contact a Jetstream Solutions Provider for help with fluid end selection.

PART BREAKDOWN

ITEM	PART NO.	DESCRIPTION	ITEM	PART NO.	DESCRIPTION
1	51690	#7 Plunger	6c	26470	Retaining Ring
	51696	#8 Plunger	6d	26472	Suction Valve Spring
	51667	#9 Plunger	6e	51664	Spring Retainer
	51694	#10 Plunger	7	51672	Manifold
	52983	#11 Plunger	8	26462	Manifold Bolt
2	51617	#7 Gland Nut	9	51695	Lube Harness
	51619	#8 Gland Nut	9a	27101	Ball Valve
	51621	#9 Gland Nut	9b	25946	Nipple
	51623	#10 Gland Nut	9c	53242	Lube Manifold
	52231	#11 Gland Nut	9d	27732	Hose Fitting
3	26416	O-Ring	9e	27740	Hose (Order in feet)
4	51689	#7 Packing Set	9f	27475	Needle Valve
	51691	#8 Packing Set	9g	26465	Nipple
	51674	#9 Packing Set	9h	60815	Nipple
	51697	#10 Packing Set	10	51666	Trunnion Rod
	52233	#11 Packing Set	11	51659	Trunnion
5	51611	#7, #8 Stuffing Box	12	26468	Cotter Pin
	51671	#9, 10 Stuffing Box	13	50064	Pump Wrench
	52232	#11 Stuffing Box	14	28779	Adapter Plate Stud
6	51675	Uni-Valve	15	51692	Adapter Plate
6a	50034	Uni-Valve Seal Kit	16	25864	Adapter Plate Nut
6b	26476	Discharge Valve Spring	17*	62171-GRN	Manifold Decal

*Not shown.

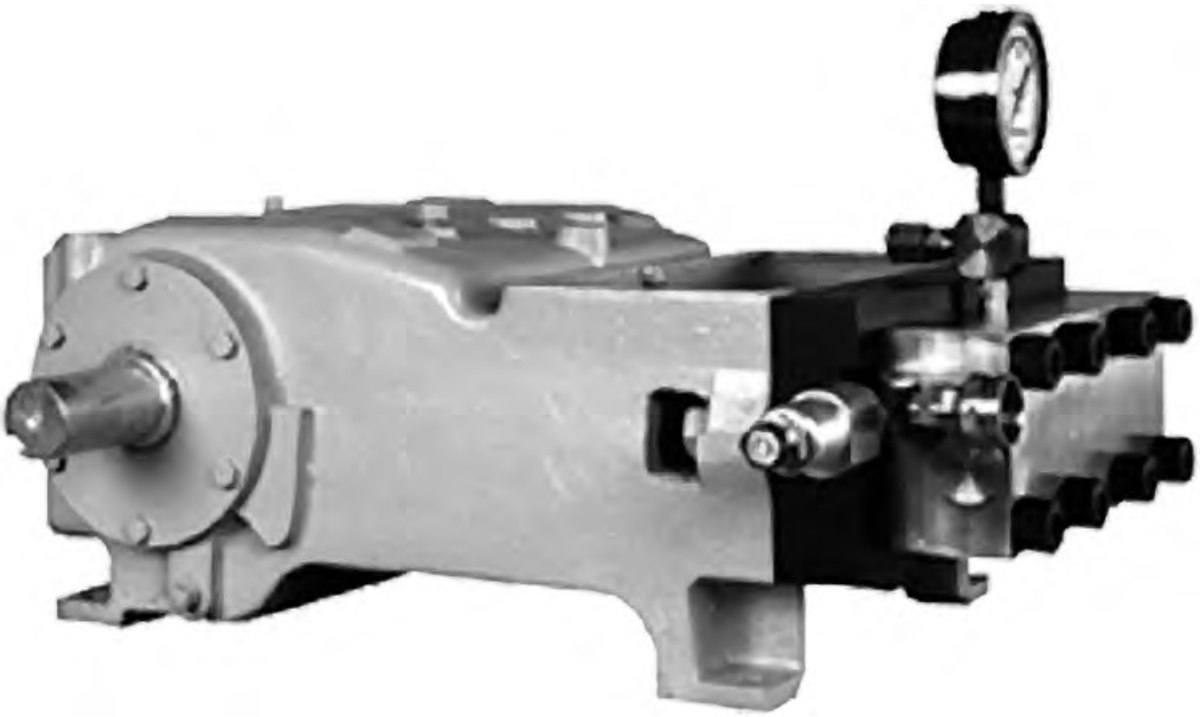

MODEL 4215N

UNX™ FLUID END UPGRADE

NLB 10150, 10200, 10225, 10203, TD-120 PUMPS

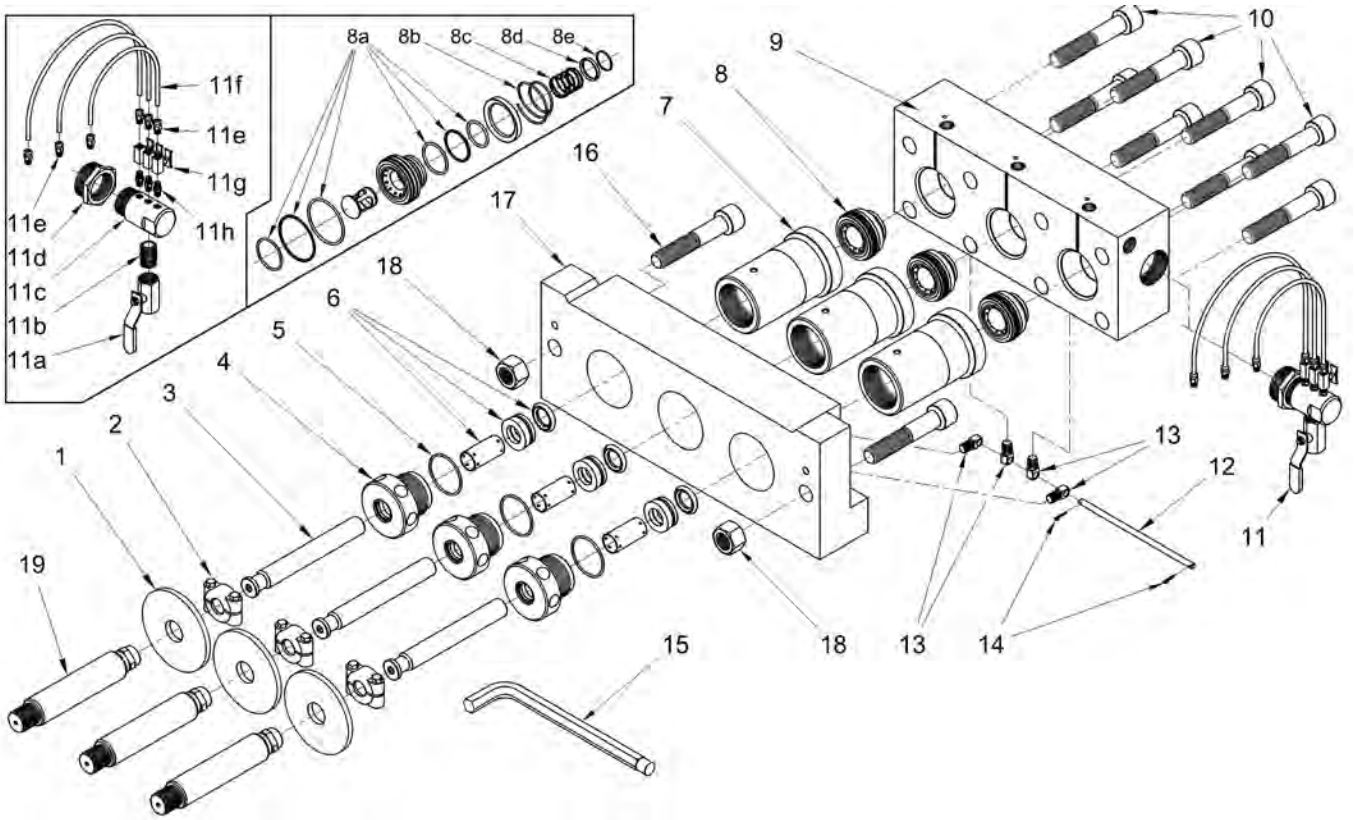

FLUID END SPECS

PART NO.	PLUNGER SIZE			CONNECTION TYPES			PUMP DISPLACEMENT AT SPECIFIED PUMP SPEEDS*								MAX. OPERATING PRESSURE	
	NO.	DIAMETER					200 RPM		300 RPM		400 RPM		500 RPM			
		in	mm	TOP PORTS	DISCHARGE PORTS	SUPPLY PORT	gpm	lpm	gpm	lpm	gpm	lpm	gpm	lpm	psi	bar
51800	10	.980	24.89	3/4" NPT Female	1/2" NPT Female	2" NPT Female	8.3	32	12.5	47	7.8	63	20.8	79	15,000	1034
51805	11	1.100	27.94				10.5	40	15.7	60	9.9	79	26.2	99	15,000	1034
51285	12	1.200	30.48				12.5	47	18.7	71	12.2	95	31.2	118	12,000	827
51810	13	1.335	33.91				15.5	59	23.2	88	15.5	117	38.6	146	10,000	689
51815	15	1.500	38.10				19.5	74	29.3	111	15.5	117	48.8	185	8,000	551

* Displacement (flow) values represented refer to "theoretical" flow, neglecting inefficiency resulting from compressibility of water and expansion of pressure bearing components. Performance data is based on power end specifications published by the original equipment manufacturer; however, some power ends may differ from those used to determine the values above. Contact a Jetstream Solutions Provider for help with fluid end selection.

PART BREAKDOWN

ITEM	PART NO.	DESCRIPTION	ITEM	PART NO.	DESCRIPTION
1	26487	Deflector	8a	52875	Uni-Valve Seal Kit
2	51736	Plunger Coupling	8b	27119	Discharge Valve Spring
3	51721	#10 Plunger	8c	27118	Suction Valve Spring
	51722	#11 Plunger	8d	52879	Spring Retainer
	51723	#12 Plunger	8e	52878	Retaining Ring
	51724	#13 Plunger	9	52864	Manifold
	51726	#15 Plunger	10	25607	Manifold Bolt
	53314	#16 Plunger	11	51955	Lube Harness
4	51647	#10 Gland Nut	11a	27101	Ball Valve
	51651	#11 Gland Nut	11b	25946	Nipple
	51707	#12 Gland Nut	11c	53242	Lube Manifold
	51744	#13 Gland Nut	11d	26802	Reducing Bushing
	51746	#15 Gland Nut	11e	27732	Hose Fitting
	53316	#16 Gland Nut	11f	27740	Hose (Order in feet)
5	26387	O-Ring (#9 to #15 Gland Nut)	11g	27475	Needle Valve
	26930	O-Ring (#16 Gland Nut)	11h	26465	Nipple
6	50658	#10 Packing Set	12	50295	Trunnion Rod
	50659	#11 Packing Set	13	51659	Trunnion
	50660	#12 Packing Set	14	26468	Cotter Pin
	50661	#13 Packing Set	15	50889	Pump Wrench
	50662	#15 Packing Set	16	26500	Adapter Plate Bolt
	53321	#16 Packing Set	17	50293	Adapter Plate
7	52872	#10, #11 Stuffing Box	18	26669	Adapter Plate Nut
	52873	#12, #13, #15 Stuffing Box	19	51766	Crosshead Stud
	53313	#16 Stuffing Box	20*	62171-GRN	Manifold Decal
8	52870	Uni-Valve			

*Not shown.

NOTE: Parts listed on this page are for current 4215N fluid end models. For first generation fluid end models, which utilize different stuffing boxes, valves, and manifold, see the following page. Models can be most easily distinguished by the part number stamped on the top face of the fluid end manifold. Current models use manifold part number 52864 while first generation fluid ends use manifold part number 50896.

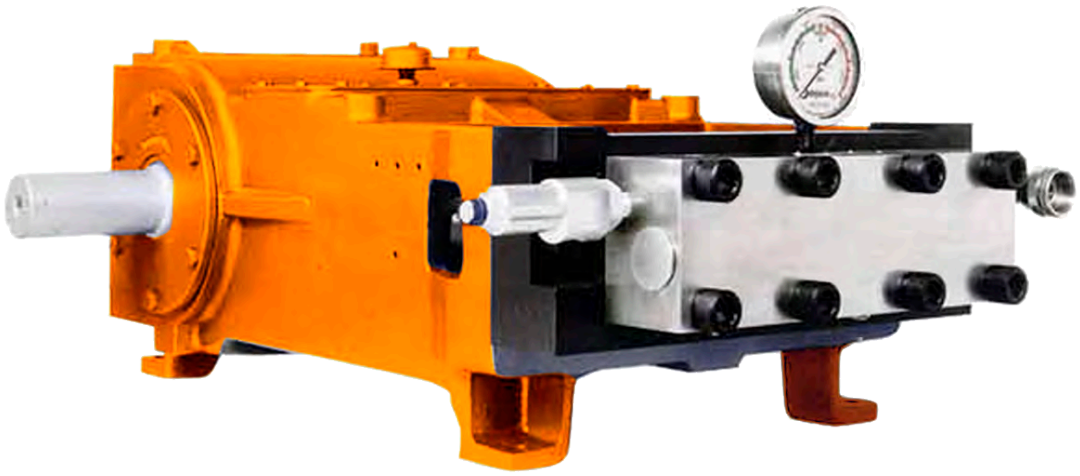

MODEL 4215N (GEN 1)

UNX™ FLUID END UPGRADE

NLB 10150, 10200, 10225, 10203, TD-120 PUMPS

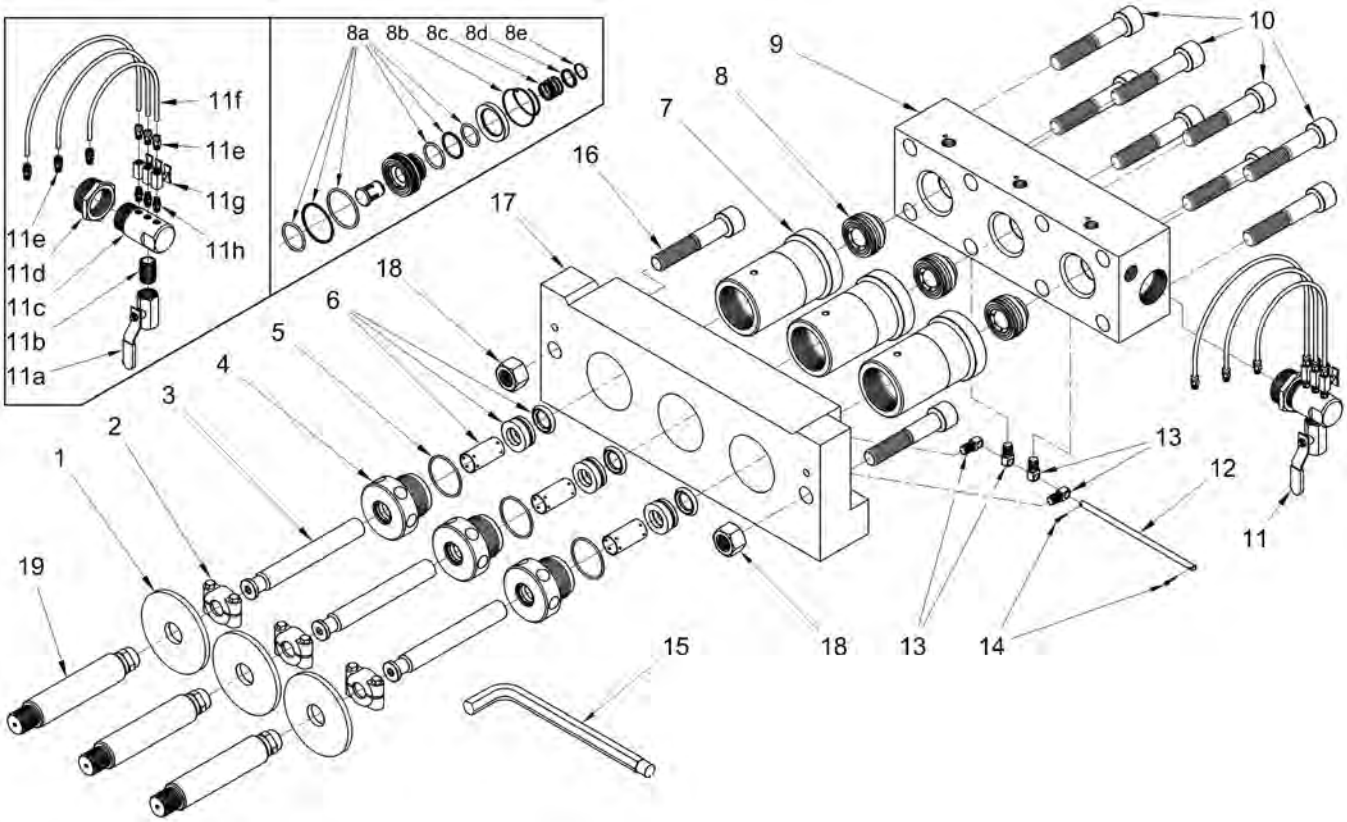

PART BREAKDOWN

ITEM	PART NO.	DESCRIPTION	ITEM	PART NO.	DESCRIPTION
1	26487	Deflector	8c	27118	Suction Valve Spring
2	51736	Plunger Coupling	8d	52879	Spring Retainer
3	51721	#10 Plunger	8e	52878	Retaining Ring
	51722	#11 Plunger	9	50896	Manifold
	51723	#12 Plunger	10	25607	Manifold Bolt
	51724	#13 Plunger	11	51955	Lube Harness
	51726	#15 Plunger	11a	27101	Ball Valve
4	51647	#10 Gland Nut	11b	25946	Nipple
	51651	#11 Gland Nut	11c	53242	Lube Manifold
	51707	#12 Gland Nut	11d	26802	Reducing Bushing
	51744	#13 Gland Nut	11e	27732	Hose Fitting
	51746	#15 Gland Nut	11f	27740	Hose (Order in feet)
5	26387	O-Ring	11g	27475	Needle Valve
6	50658	#10 Packing Set	11h	26465	Nipple
	50659	#11 Packing Set	12	50295	Trunnion Rod
	50660	#12 Packing Set	13	51659	Trunnion
	50661	#13 Packing Set	14	26468	Cotter Pin
	50662	#15 Packing Set	15	50889	Pump Wrench
7	50297	#10, #11 Stuffing Box	16	26500	Adapter Plate Bolt
	50299	#12, #13, #15 Stuffing Box	17	50293	Adapter Bolt
8	52870	Uni-Valve	18	26669	Adapter Plate Nut
8a	52875	Uni-Valve Seal Kit	19	51766	Crosshead Stud
8b	27119	Discharge Valve Spring			

NOTE: Parts listed on this page are for first generation 4215N fluid end models no longer sold. These models utilize different stuffing boxes, valves, and manifold than the current design. Models can be most easily distinguished by the part number stamped on the top face of the fluid end manifold. Current models use manifold part number 52864 while first generation fluid ends featured on this page use manifold part number 50896.

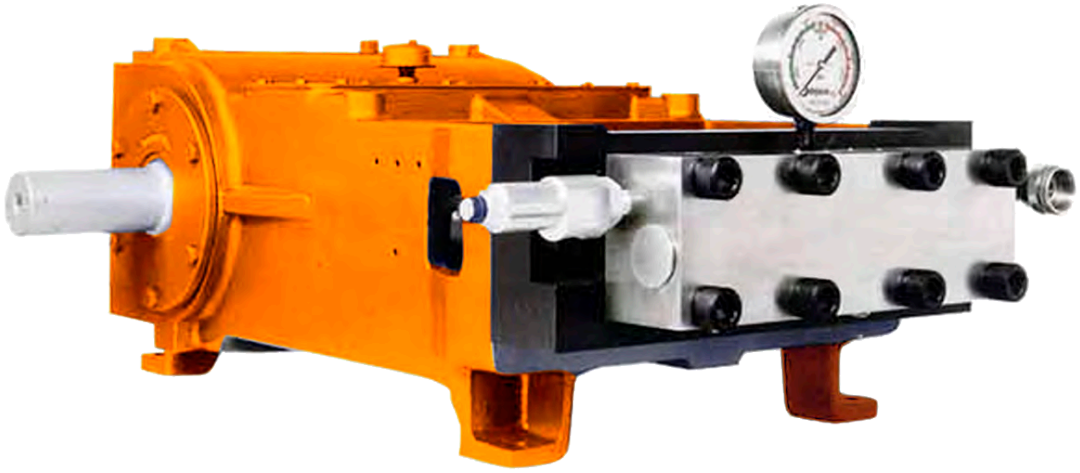

MODEL 4215QN

UNX™ FLUID END UPGRADE
NLB 10250, QD-200 (POWER END) PUMPS

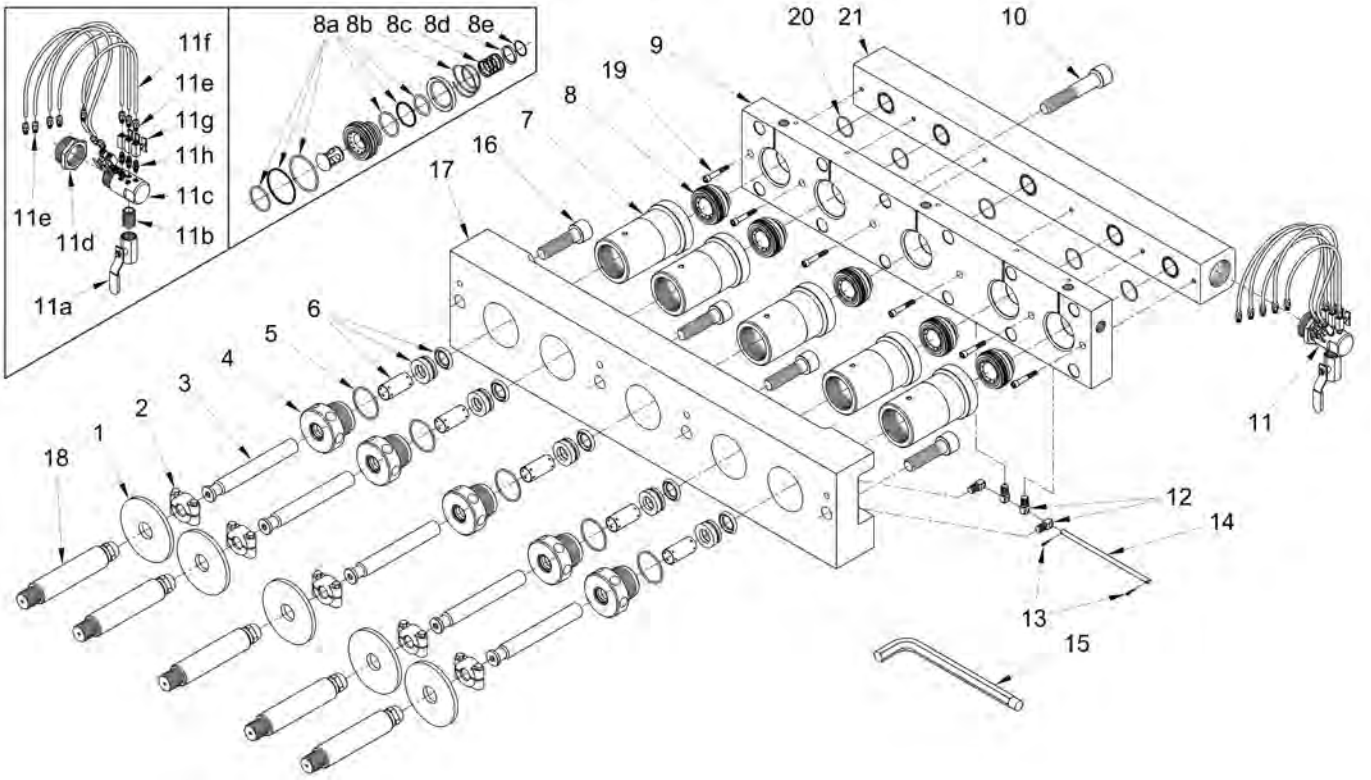

FLUID END SPECS

PART NO.	PLUNGER SIZE			CONNECTION TYPES			PUMP DISPLACEMENT AT SPECIFIED PUMP SPEEDS*								MAX. OPERATING PRESSURE	
	NO.	DIAMETER					150 RPM		200 RPM		300 RPM		400 RPM			
		in	mm	TOP PORTS	DISCHARGE PORTS	SUPPLY PORT	gpm	lpm	gpm	lpm	gpm	lpm	gpm	lpm	psi	bar
53555	10	.980	24.89	3/4" NPT Female	1/2" NPT Female	2" NPT Female	6.9	26	13.9	53	20.8	79	27.8	105	15,000	1034
53560	11	1.100	27.94				8.7	33	17.5	66	26.2	99	35.0	132	12,000	827
53565	12	1.200	30.48				10.4	39	20.8	79	31.2	118	41.6	157	10,000	689
53585	13	1.335	33.91				12.9	49	25.8	98	38.6	146	51.5	195	8,000	551
53575	15	1.500	38.10				16.3	62	32.5	123	48.8	185	65.1	246	6,500	448

* Displacement (flow) values represented refer to "theoretical" flow, neglecting inefficiency resulting from compressibility of water and expansion of pressure bearing components. Performance data is based on power end specifications published by the original equipment manufacturer; however, some power ends may differ from those used to determine the values above. Contact a Jetstream Solutions Provider for help with fluid end selection.

PART BREAKDOWN

ITEM	PART NO.	DESCRIPTION	ITEM	PART NO.	DESCRIPTION
1	26487	Deflector	8d	52879	Spring Retainer
2	51736	Plunger Coupling	8e	52878	Retaining Ring
3	51721	#10 Plunger	9	53598	Manifold
	51722	#11 Plunger	10	27550	Manifold Bolt
	51723	#12 Plunger	11	53590	Lube Harness
	51724	#13 Plunger	11a	27101	Ball Valve
	51726	#15 Plunger	11b	25946	Nipple
4	51647	#10 Gland Nut	11c	53793	Lube Manifold
	51651	#11 Gland Nut	11d	27729	Reducing Bushing
	51707	#12 Gland Nut	11e	26874	Hose Fitting
	51744	#13 Gland Nut	11f	26469	Hose (Order in feet)
	51746	#15 Gland Nut	11g	27475	Needle Valve
5	26387	O-Ring	11h	26465	Nipple
6	50658	#10 Packing Set	12	51659	Trunnion
	50659	#11 Packing Set	13	26468	Cotter Pin
	50660	#12 Packing Set	14	50295	Trunnion Rod
	50661	#13 Packing Set	15	50889	Pump Wrench
	50662	#15 Packing Set	16	27550	Adapter Plate Bolt
7	52872	#10, #11 Stuffing Box	17	53602	Adapter Plate
	52873	#12, #13, #15 Stuffing Box	18	51766	Crosshead Stud
8	52870	Uni-Valve	19	27551	Suction Manifold Bolt
8a	52875	Uni-Valve Seal Kit	20	25566	O-Ring
8b	27119	Discharge Valve Spring	21	53601	Suction Manifold
8c	27118	Suction Valve Spring			

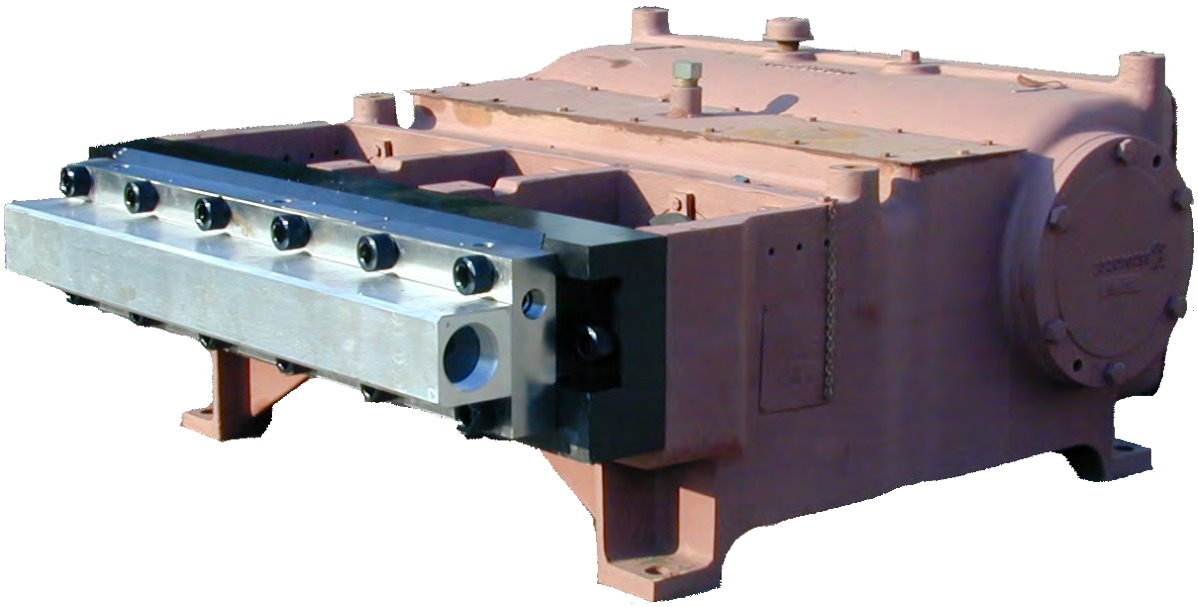

RELIABLE UPGRADES

MODEL 3015R

UNX™ FLUID END UPGRADE
RELIABLE
RD115 PUMPS

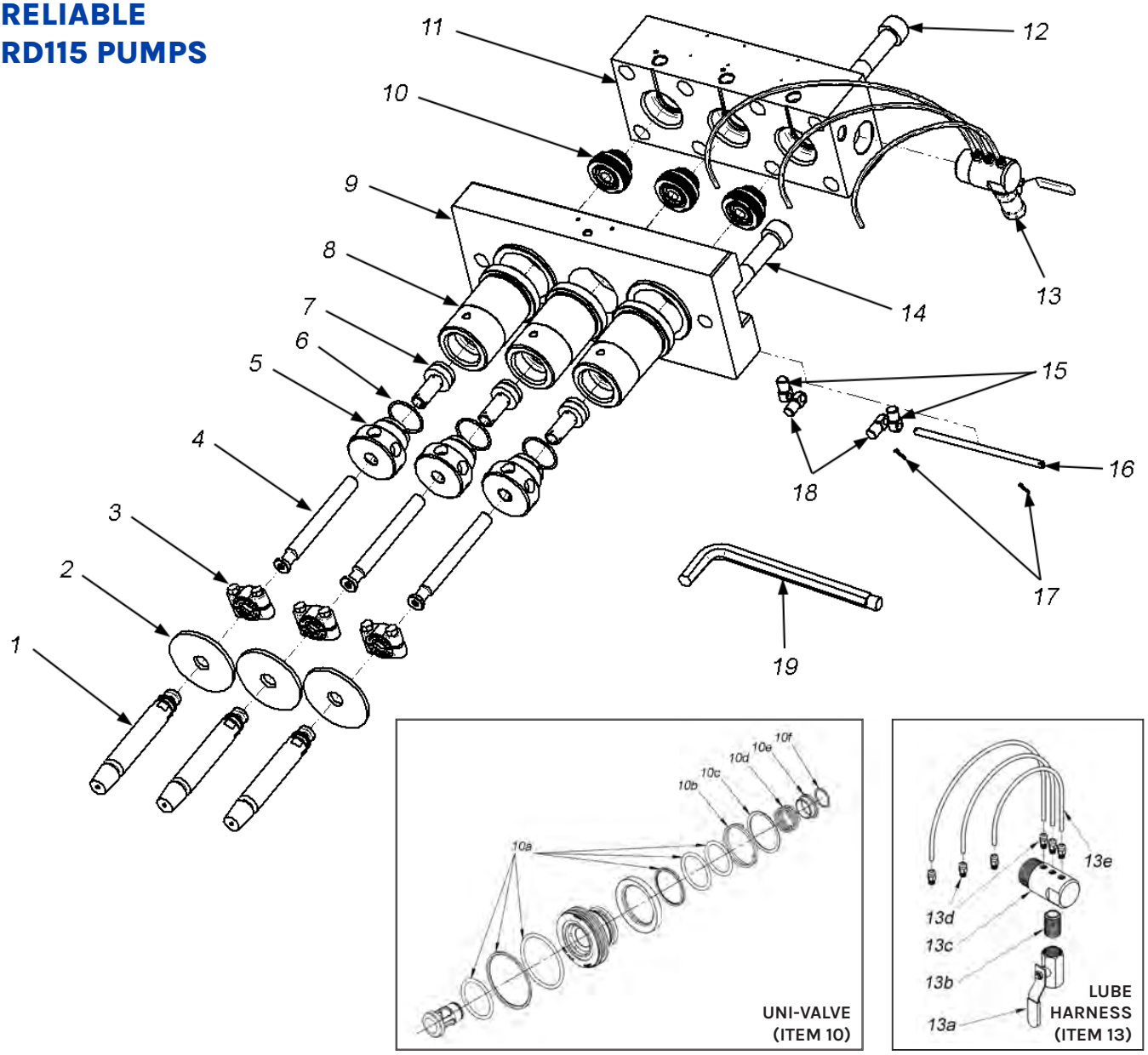

FLUID END SPECS

PART NO.	PLUNGER SIZE			CONNECTION TYPES			PUMP DISPLACEMENT AT SPECIFIED PUMP SPEEDS*								MAX. OPERATING PRESSURE**	
	NO.	DIAMETER					200 RPM		300 RPM		400 RPM		500 RPM			
		in	mm	TOP PORTS	DISCHARGE PORTS	SUPPLY PORT	gpm	lpm	gpm	lpm	gpm	lpm	gpm	lpm	psi	bar
69016	8	.800	20.32	1/2" NPT Female	1/2" NPT Female	1-1/2" NPT Female	3.6	14	5.4	20	7.2	27	9.0	34	15,000	1034
68584	10	1.000	25.40				5.6	21	8.4	32	11.2	42	14.0	53	11,000	758

* Displacement (flow) values represented refer to "theoretical" flow, neglecting inefficiency resulting from compressibility of water and expansion of pressure bearing components. Performance data is based on power end specifications published by the original equipment manufacturer; however, some power ends may differ from those used to determine the values above. Contact a Jetstream Solutions Provider for help with fluid end selection.
** At 100 hp

PART BREAKDOWN

ITEM	PART NO.	DESCRIPTION	ITEM	PART NO.	DESCRIPTION
1	68577	Pony Rod	10d	26472	Suction Valve Spring
2	26623	Deflector	10e	51664	Spring Retainer
3	51737	Plunger Clamp	10f	26474	Retaining Ring
4	51741	#8 Plunger	11	68574	Manifold
	51743	#10 Plunger	12	26462	Manifold Bolt
5	51619	#8 Gland Nut	13	51970	Lube Harness
	51623	#10 Gland Nut	13a	27101	Ball Valve
6	26416	O-Ring	13b	25946	Nipple
7	51691	#8 Packing Set	13c	53242	Lube Manifold
	51697	#10 Packing Set	13d	27732	Hose Fitting
8	51611	#7, #8 Stuffing Box	13e	27740	Hose (Order in feet)
	51671	#9, #10 Stuffing Box	14	26220	Adapter Plate Bolt
9	68573	Adapter Plate	15	51659	Trunnion
10	51675	Uni-Valve	16	51666	Trunnion Rod
10a	50034	Uni-Valve Seal Kit	17	26468	Cotter Pin
10b	26476	Discharge Valve Spring	18	51659	Trunnion
10c	26470	Retaining Ring	19	50064	5/8" Pump Wrench

TRITAN/WHEATLEY UPGRADES

MODEL 3115T

UNX™ FLUID END UPGRADE
TRITAN
3310SS, 3310WSS, P-313, P-323, P-330A PUMPS

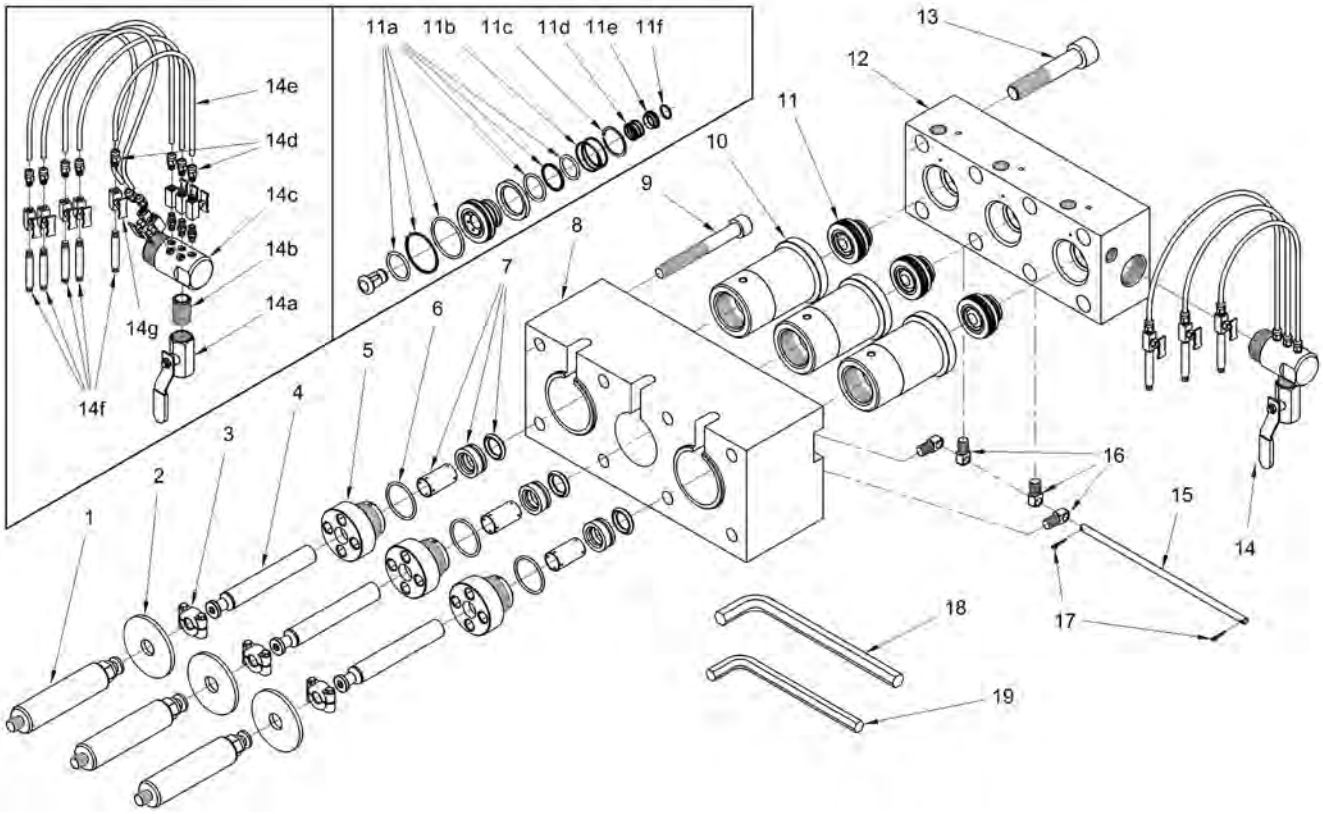

FLUID END SPECS

PART NO.	PLUNGER SIZE			CONNECTION TYPES			PUMP DISPLACEMENT AT SPECIFIED PUMP SPEEDS*								MAX. OPERATING PRESSURE	
	NO.	DIAMETER					200 RPM		300 RPM		400 RPM		500 RPM			
		in	mm	TOP PORTS	DISCHARGE PORTS	SUPPLY PORT	gpm	lpm	gpm	lpm	gpm	lpm	gpm	lpm	psi	bar
52755	7	.735	18.67	1/2" NPT Female	1/2" NPT Female	1-1/2" NPT Female	3.4	13	5.2	20	6.9	26	8.6	33	15,000	1034
52760	8	.800	20.32				4.1	15	6.1	23	8.2	31	10.2	39	12,500	861
52765	9	.900	22.86				5.2	20	7.7	29	10.3	39	12.9	49	10,000	689
52770	10	1.000	25.40				6.4	24	9.6	36	12.7	48	15.9	60	8,000	551

* Displacement (flow) values represented refer to "theoretical" flow, neglecting inefficiency resulting from compressibility of water and expansion of pressure bearing components. Performance data is based on power end specifications published by the original equipment manufacturer; however, some power ends may differ from those used to determine the values above. Contact a Jetstream Solutions Provider for help with fluid end selection.

PART BREAKDOWN

ITEM	PART NO.	DESCRIPTION	ITEM	PART NO.	DESCRIPTION
1	51791	Pony Rod	11a	50034	Uni-Valve Seal Kit
2	26623	Deflector	11b	26476	Discharge Valve Spring
3	51737	Plunger Clamp	11c	26470	Retaining Ring
4	51831	#7 Plunger	11d	26472	Suction Valve Spring
	51741	#8 Plunger	11e	51664	Spring Retainer
	51742	#9 Plunger	11f	26474	Retaining Ring
	51743	#10 Plunger	12	52702	Manifold
5	51796	#7 Gland Nut	13	26462	Manifold Bolt
	51797	#8 Gland Nut	14	52785	Lube Harness
	51798	#9 Gland Nut	14a	27101	Ball Valve
	51799	#10 Gland Nut	14b	25946	Nipple
6	26416	O-Ring	14c	53242	Lube Manifold
7	51689	#7 Packing Set	14d	27732	Hose Fitting
	51691	#8 Packing Set	14e	27740	Hose (Order in feet)
	51674	#9 Packing Set	14f	26543	Nipple
	51697	#10 Packing Set	14g	27475	Needle Valve
8	52701	Adapter Plate	15	51666	Trunnion Rod
9	25220	Adapter Plate Bolt	16	51659	Trunnion
10	51788	#7, #8 Stuffing Box	17	26468	Cotter Pin
	51789	#9, #10 Stuffing Box	18	50064	3/4" Pump Wrench
11	51675	Uni-Valve	19	26544	5/8" Pump Wrench

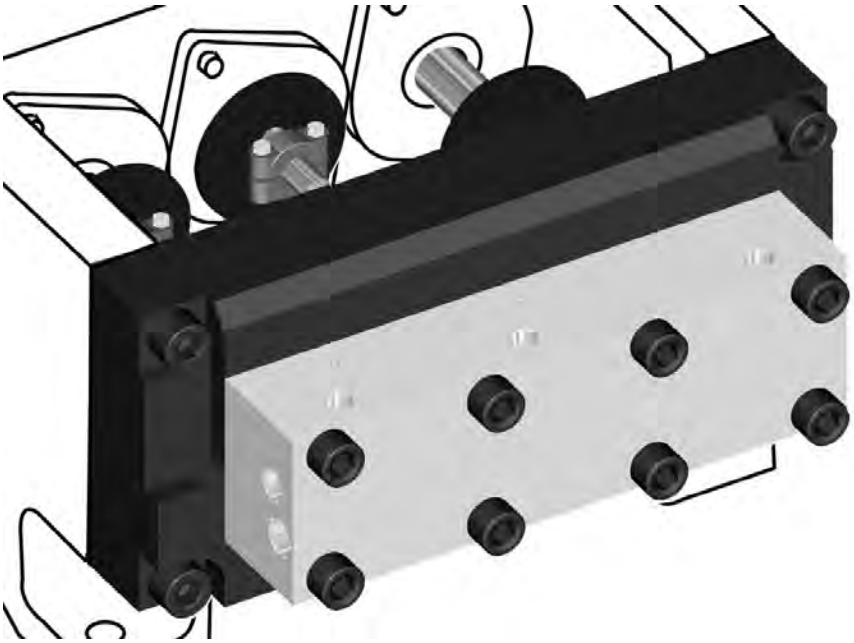

MODEL 35150

UNX™ FLUID END UPGRADE
TRITAN | WHEATLEY
5127SS PUMP

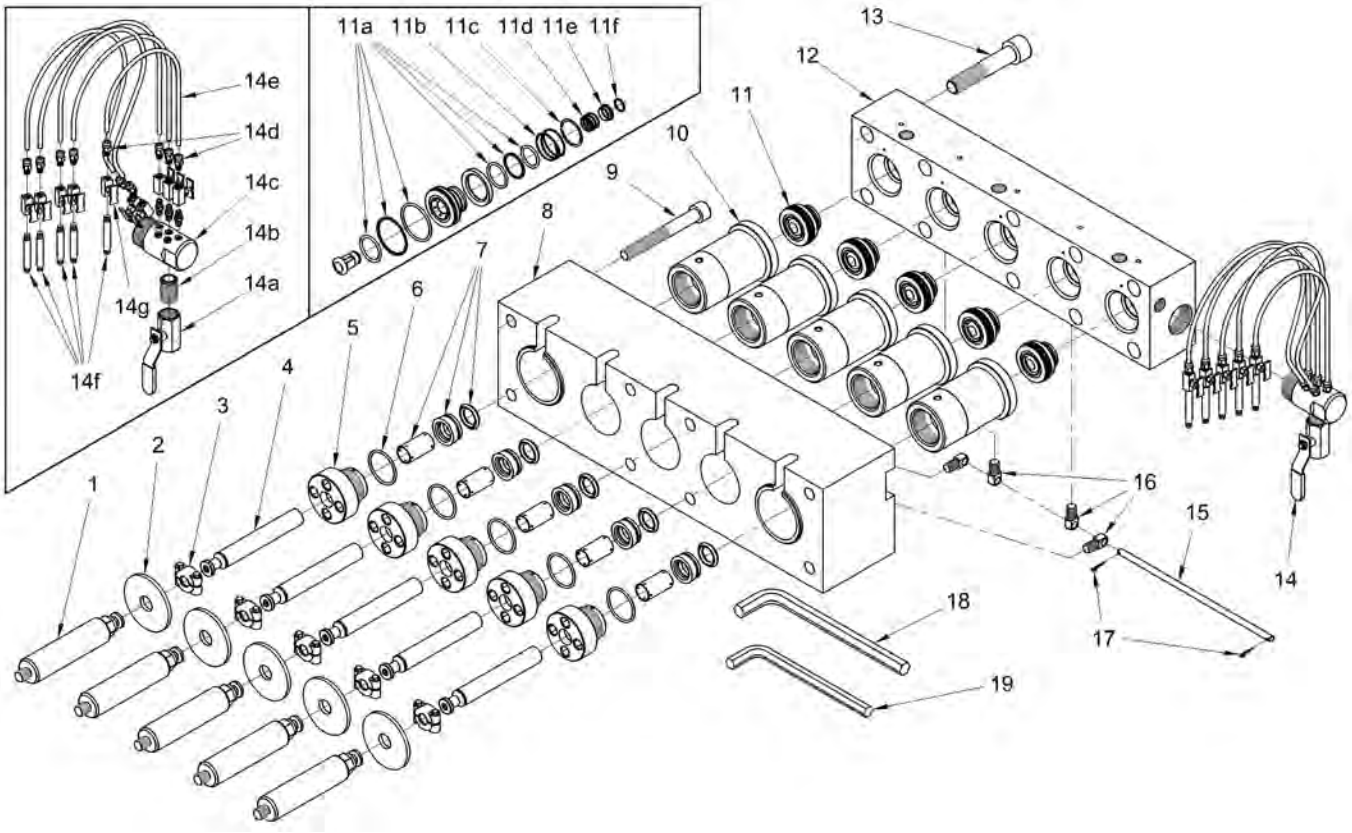

FLUID END SPECS

PART NO.	PLUNGER SIZE			CONNECTION TYPES			PUMP DISPLACEMENT AT SPECIFIED PUMP SPEEDS*								MAX. OPERATING PRESSURE	
	NO.	DIAMETER					200 RPM		300 RPM		400 RPM		500 RPM			
		in	mm	TOP PORTS	DISCHARGE PORTS	SUPPLY PORT	gpm	lpm	gpm	lpm	gpm	lpm	gpm	lpm	psi	bar
51915	7	.735	18.67	1/2" NPT Female	1/2" NPT Female	1-1/2" NPT Female	6.4	24	9.6	37	12.9	49	16.1	61	15,000	1034
51920	8	.800	20.32				7.6	29	11.4	43	15.2	58	19.0	72	12,500	861
51925	9	.900	22.86				9.6	36	14.5	55	19.3	73	24.1	91	10,000	689
51930	10	1.000	25.40				11.9	45	17.9	68	90	29.8	113	60	8,000	551

* Displacement (flow) values represented refer to "theoretical" flow, neglecting inefficiency resulting from compressibility of water and expansion of pressure bearing components. Performance data is based on power end specifications published by the original equipment manufacturer; however, some power ends may differ from those used to determine the values above. Contact a Jetstream Solutions Provider for help with fluid end selection.

PART BREAKDOWN

ITEM	PART NO.	DESCRIPTION	ITEM	PART NO.	DESCRIPTION
1	51791	Pony Rod	11a	50034	Uni-Valve Seal Kit
2	26623	Deflector	11b	26476	Discharge Valve Spring
3	51737	Plunger Clamp	11c	26470	Retaining Ring
4	51831	#7 Plunger	11d	26472	Suction Valve Spring
	51741	#8 Plunger	11e	51664	Spring Retainer
	51742	#9 Plunger	11f	26474	Retaining Ring
	51743	#10 Plunger	12	51793	Manifold
5	51796	#7 Gland Nut	13	26462	Manifold Bolt
	51797	#8 Gland Nut	14	51795	Lube Harness
	51798	#9 Gland Nut	14a	27101	Ball Valve
	51799	#10 Gland Nut	14b	25946	Nipple
6	26416	O-Ring	14c	53793	Lube Manifold
7	51689	#7 Packing Set	14d	26874	Hose Fitting
	51691	#8 Packing Set	14e	26469	Hose (Order in feet)
	51674	#9 Packing Set	14f	26543	Nipple
	51697	#10 Packing Set	14g	27475	Needle Valve
8	51792	Adapter Plate	15	51016	Trunnion Rod
9	25220	Adapter Plate Bolt	16	51659	Trunnion
10	51788	#7, #8 Stuffing Box	17	26468	Cotter Pin
	51789	#9, #10 Stuffing Box	18	50064	3/4" Pump Wrench
11	51675	Uni-Valve	19	26544	5/8" Pump Wrench

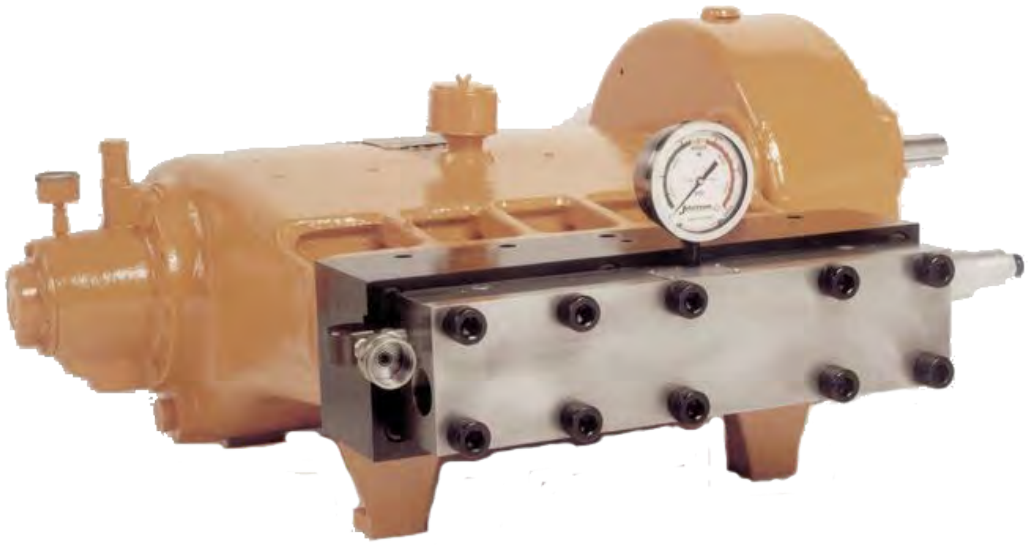

WEATHERFORD UPGRADE

MODEL 3015W

UNX™ FLUID END UPGRADE
WEATHERFORD
FE85 PUMP

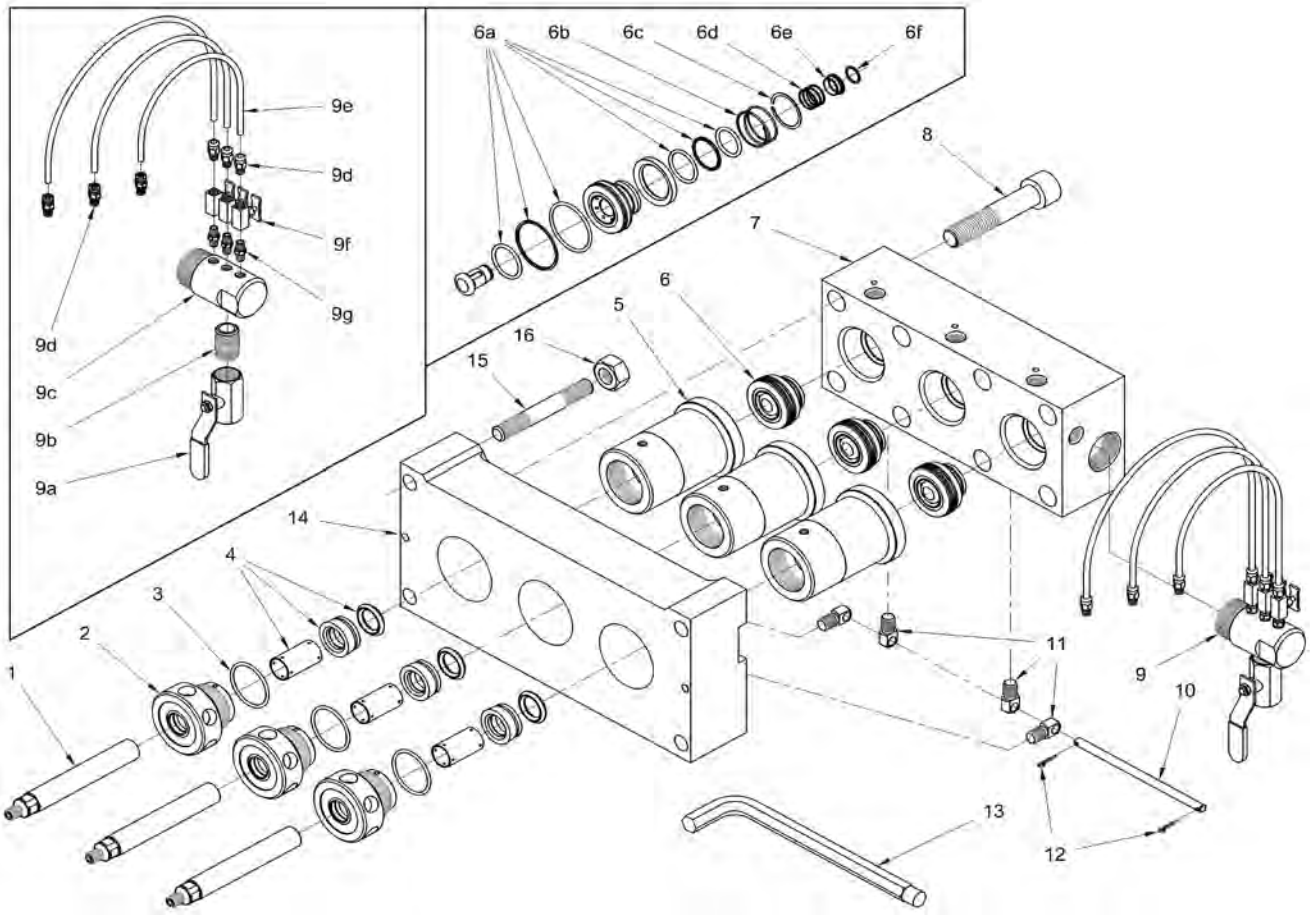

FLUID END SPECS

PART NO.	PLUNGER SIZE			CONNECTION TYPES			PUMP DISPLACEMENT AT SPECIFIED PUMP SPEEDS*								MAX. OPERATING PRESSURE	
	NO.	DIAMETER					200 RPM		300 RPM		400 RPM		500 RPM			
		in	mm	TOP PORTS	DISCHARGE PORTS	SUPPLY PORT	gpm	lpm	gpm	lpm	gpm	lpm	gpm	lpm	psi	bar
51740	7	.735	18.67	1/2" NPT Female	1/2" NPT Female	1-1/2" NPT Female	5.0	19	6.6	25	8.3	31	9.1	34	15,000	1034
51745	8	.800	20.32				5.9	22	7.8	30	9.8	37	10.8	41	12,500	861
51750	9	.900	22.86				7.4	28	9.9	38	12.4	47	13.6	51	10,000	689
51755	10	1.000	25.40				9.2	35	12.2	46	15.3	58	16.8	64	8,000	551
52280	11	1.125	28.58				11.6	44	15.5	59	19.4	73	21.3	81	6,000	413

* Displacement (flow) values represented refer to "theoretical" flow, neglecting inefficiency resulting from compressibility of water and expansion of pressure bearing components. Performance data is based on power end specifications published by the original equipment manufacturer; however, some power ends may differ from those used to determine the values above. Contact a Jetstream Solutions Provider for help with fluid end selection.

PART BREAKDOWN

ITEM	PART NO.	DESCRIPTION	ITEM	PART NO.	DESCRIPTION
1	51690	#7 Plunger	6c	26470	Retaining Ring
	51696	#8 Plunger	6d	26472	Suction Valve Spring
	51667	#9 Plunger	6e	51664	Spring Retainer
	51694	#10 Plunger	6f	26474	Retaining Ring
	52983	#11 Plunger	7	51672	Manifold
2	51617	#7 Gland Nut	8	26462	Manifold Bolt
	51619	#8 Gland Nut	9	51695	Lube Harness
	51621	#9 Gland Nut	9a	27101	Ball Valve
	51623	#10 Gland Nut	9b	25946	Nipple
	52231	#11 Gland Nut	9c	53242	Lube Manifold
3	26416	O-Ring	9d	27732	Hose Fitting
4	51689	#7 Packing Set	9e	27740	Hose (Order in feet)
	51691	#8 Packing Set	9f	27475	Needle Valve
	51674	#9 Packing Set	9g	26465	Nipple
	51697	#10 Packing Set	10	51666	Trunnion Rod
	52233	#11 Packing Set	11	51659	Trunnion
5	51611	#7, #8 Stuffing Box	12	26468	Cotter Pin
	51671	#9, 10 Stuffing Box	13	50064	Pump Wrench
	52232	#11 Stuffing Box	14	51656	Adapter Plate
6	51675	Uni-Valve	15	26473	Adapter Plate Stud
6a	50034	Uni-Valve Seal Kit	16	25706	Adapter Plate Nut
6b	26476	Discharge Valve Spring	17*	62171-GRN	Manifold Decal

*Not shown.

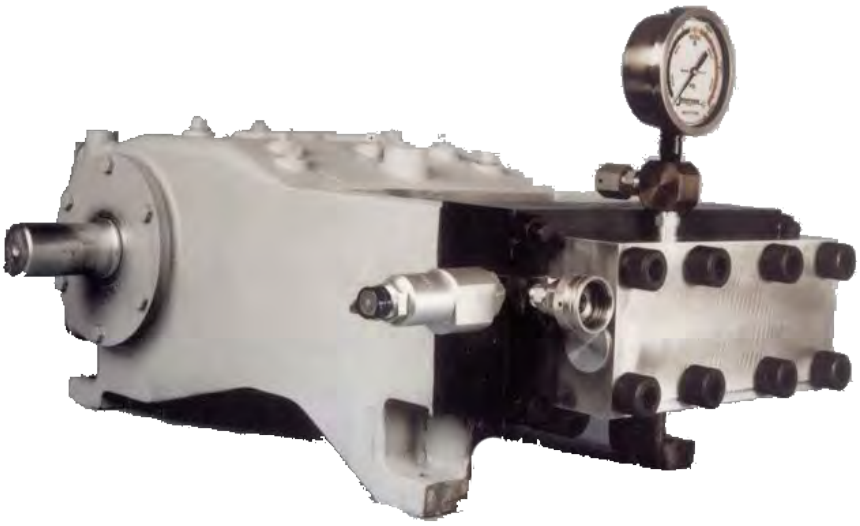

WOMA UPGRADES

MODEL 3715W

UNX™ FLUID END UPGRADE
WOMA
1502, 1503 PUMPS

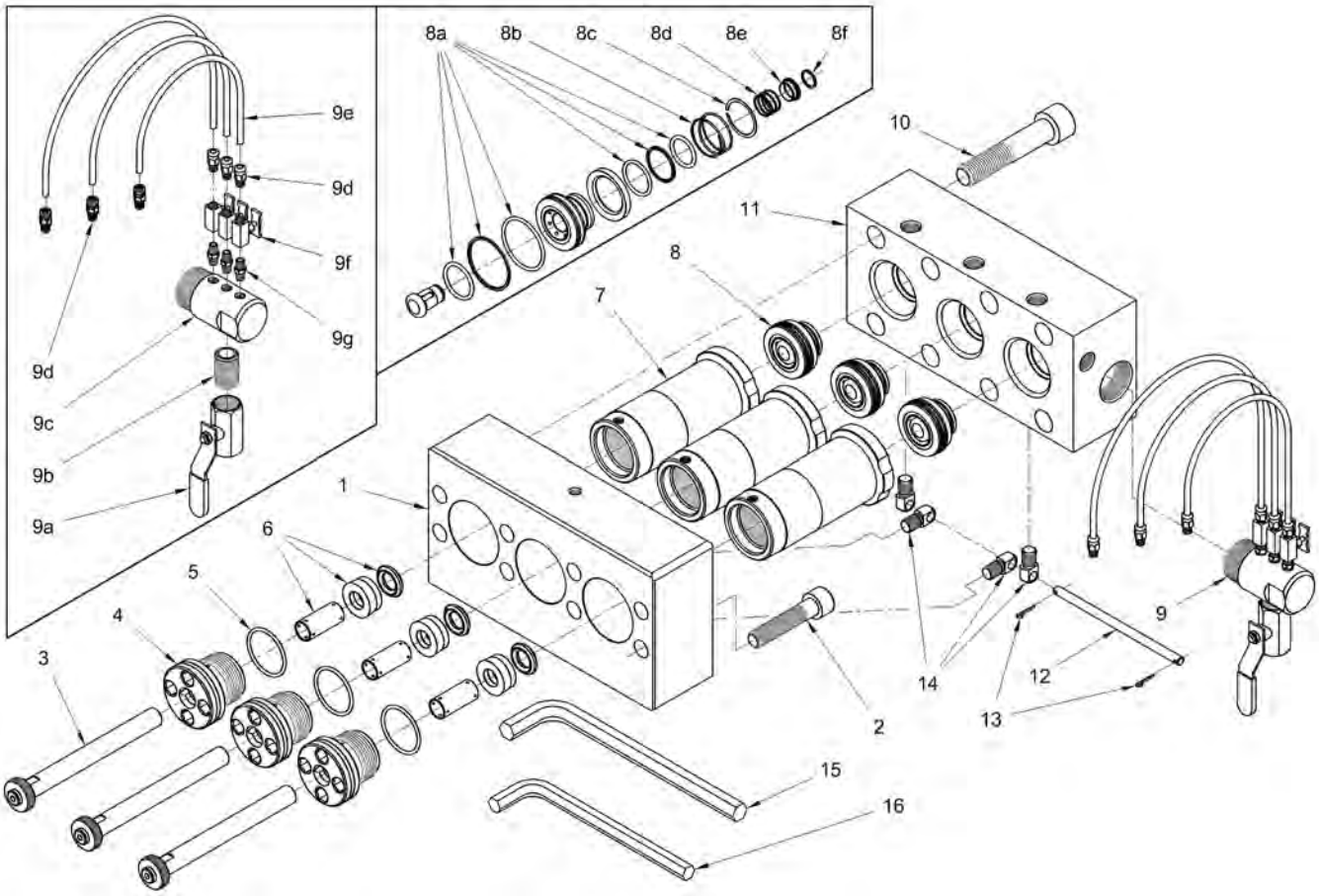

FLUID END SPECS

PART NO.	PLUNGER SIZE			CONNECTION TYPES			PUMP DISPLACEMENT AT SPECIFIED PUMP SPEEDS*								MAX. OPERATING PRESSURE	
	NO.	DIAMETER					200 RPM		300 RPM		400 RPM		500 RPM			
		in	mm	TOP PORTS	DISCHARGE PORTS	SUPPLY PORT	gpm	lpm	gpm	lpm	gpm	lpm	gpm	lpm	psi	bar
65187	7	.735	18.67	1/2" NPT Female	1/2" NPT Female	1-1/2" NPT Female	4.1	16	6.2	23	8.2	31	10.3	39	15,000	1034
54560	8	.800	20.32				4.9	18	7.3	28	9.8	37	12.2	46	15,000	1034
54555	9	.900	22.86				6.2	23	9.3	35	12.4	47	15.5	59	12,500	861
54550	10	1.00	25.40				7.6	29	11.4	43	15.3	58	19.1	72	10,000	689
54545	11	1.125	28.58				9.7	37	14.5	55	19.3	73	24.2	92	8,000	551

* Displacement (flow) values represented refer to "theoretical" flow, neglecting inefficiency resulting from compressibility of water and expansion of pressure bearing components. Performance data is based on power end specifications published by the original equipment manufacturer; however, some power ends may differ from those used to determine the values above. Contact a Jetstream Solutions Provider for help with fluid end selection.

PART BREAKDOWN

ITEM	PART NO.	DESCRIPTION	ITEM	PART NO.	DESCRIPTION
1	54426	Adapter Plate	8b	26476	Discharge Valve Spring
2	29748	Adapter Plate Bolt	8c	26470	Retaining Ring
3	55489	#8 Plunger	8d	26472	Suction Valve Spring
	54501	#9 Plunger	8e	51664	Spring Retainer
	54502	#10 Plunger	8f	26474	Retaining Ring
	54503	#11 Plunger	9	51695	Lube Harness
4	54428	#8 Gland Nut	9a	27101	Ball Valve
	54506	#9 Gland Nut	9b	25946	Nipple
	54507	#10 Gland Nut	9c	53242	Lube Manifold
	54508	#11 Gland Nut	9d	27732	Hose Fitting
5	26416	O-Ring	9e	27740	Hose (Order in feet)
6	51691	#8 Packing Set	9f	27475	Needle Valve
	51674	#9 Packing Set	9g	26465	Nipple
	51697	#10 Packing Set	10	26462	Manifold Bolt
	52233	#11 Packing Set	11	55266	Manifold
7	55491	#8 Stuffing Box	12	51666	Trunnion Rod
	54496	#9, #10 Stuffing Box	13	26468	Cotter Pin
	54497	#11 Stuffing Box	14	51659	Trunnion
8	51675	Uni-Valve	15	50064	3/4" Pump Wrench
8a	50034	Uni-Valve Seal Kit	16	26544	5/8" Pump Wrench

NOTE: Parts listed on this page are for current 3715W fluid end models. For first generation fluid end models, which utilize different stuffing boxes, plungers, manifold, and adapter plate, see the following page. Models can be most easily distinguished by the part number stamped on the top face of the fluid end manifold. Current models use manifold part number 55266 while first generation fluid ends use manifold part number 54424.

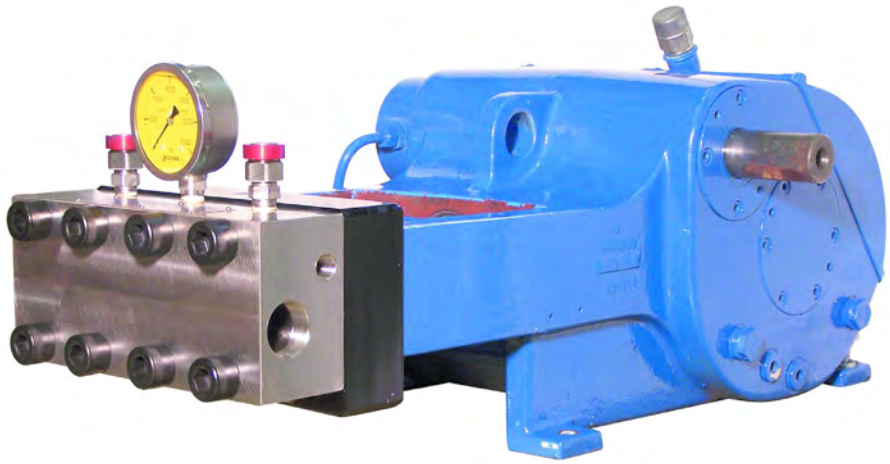

MODEL 3715W (GEN 1)

UNX™ FLUID END UPGRADE
WOMA
1502, 1503 PUMPS

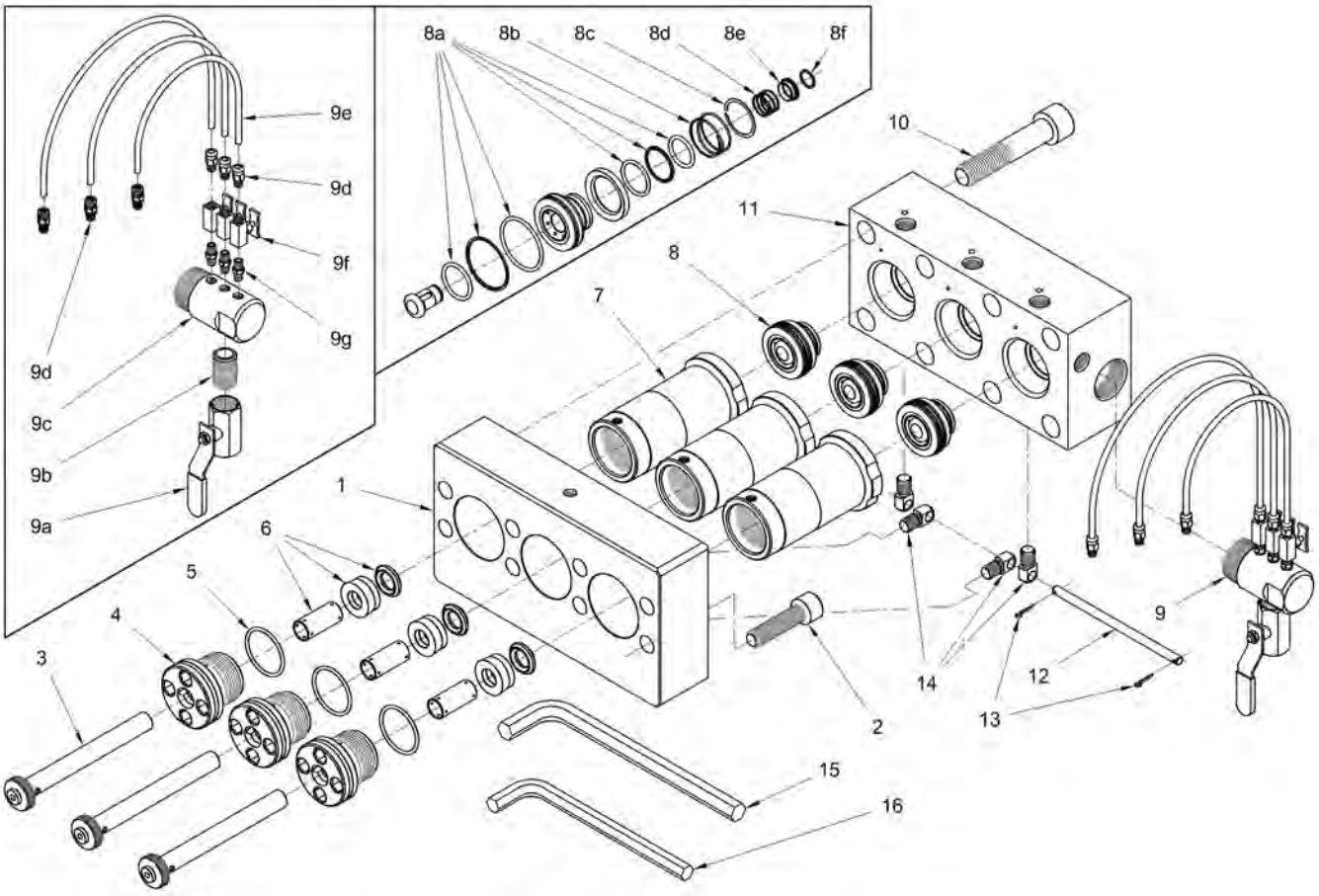

PART BREAKDOWN

ITEM	PART NO.	DESCRIPTION	ITEM	PART NO.	DESCRIPTION
1	N/A	Adapter Plate	9a	27101	Ball Valve
2	28616	Adapter Plate Bolt	9b	25946	Nipple
3	54429	#8 Plunger	9c	53242	Lube Manifold
4	54428	#8 Gland Nut	9d	27732	Hose Fitting
5	26416	O-Ring	9e	27740	Hose (Order in feet)
6	51691	#8 Packing Set	9f	27475	Needle Valve
7	54427	#8 Stuffing Box	9g	26465	Nipple
8	51675	Uni-Valve	10	26462	Manifold Bolt
8a	50034	Uni-Valve Seal Kit	11	N/A	Manifold
8b	26476	Discharge Valve Spring	12	51666	Trunnion Rod
8c	26470	Retaining Ring	13	26468	Cotter Pin
8d	26472	Suction Valve Spring	14	51659	Trunnion
8e	51664	Spring Retainer	15	50064	3/4" Pump Wrench
8f	26474	Retaining Ring	16	26544	5/8" Pump Wrench
9	51695	Lube Harness			

NOTE: Parts listed on this page are for first generation 3715W fluid end models no longer sold. These models utilize different stuffing boxes, plungers, manifold, and adapter plate than the current design. Models can be most easily distinguished by the part number stamped on the top face of the fluid end manifold. Current models use manifold part number 55266 while first generation fluid ends featured on this page use manifold part number 54424.

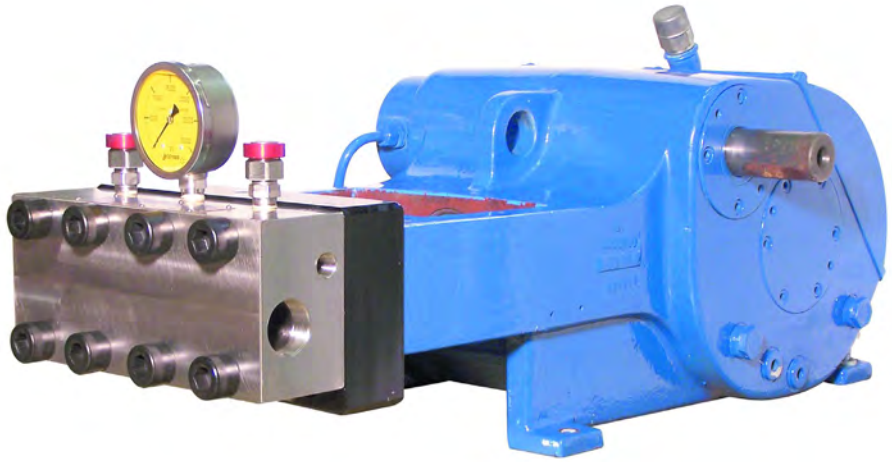

MODEL 3715WZ

UNX™ FLUID END UPGRADE
WOMA
150-Z PUMP

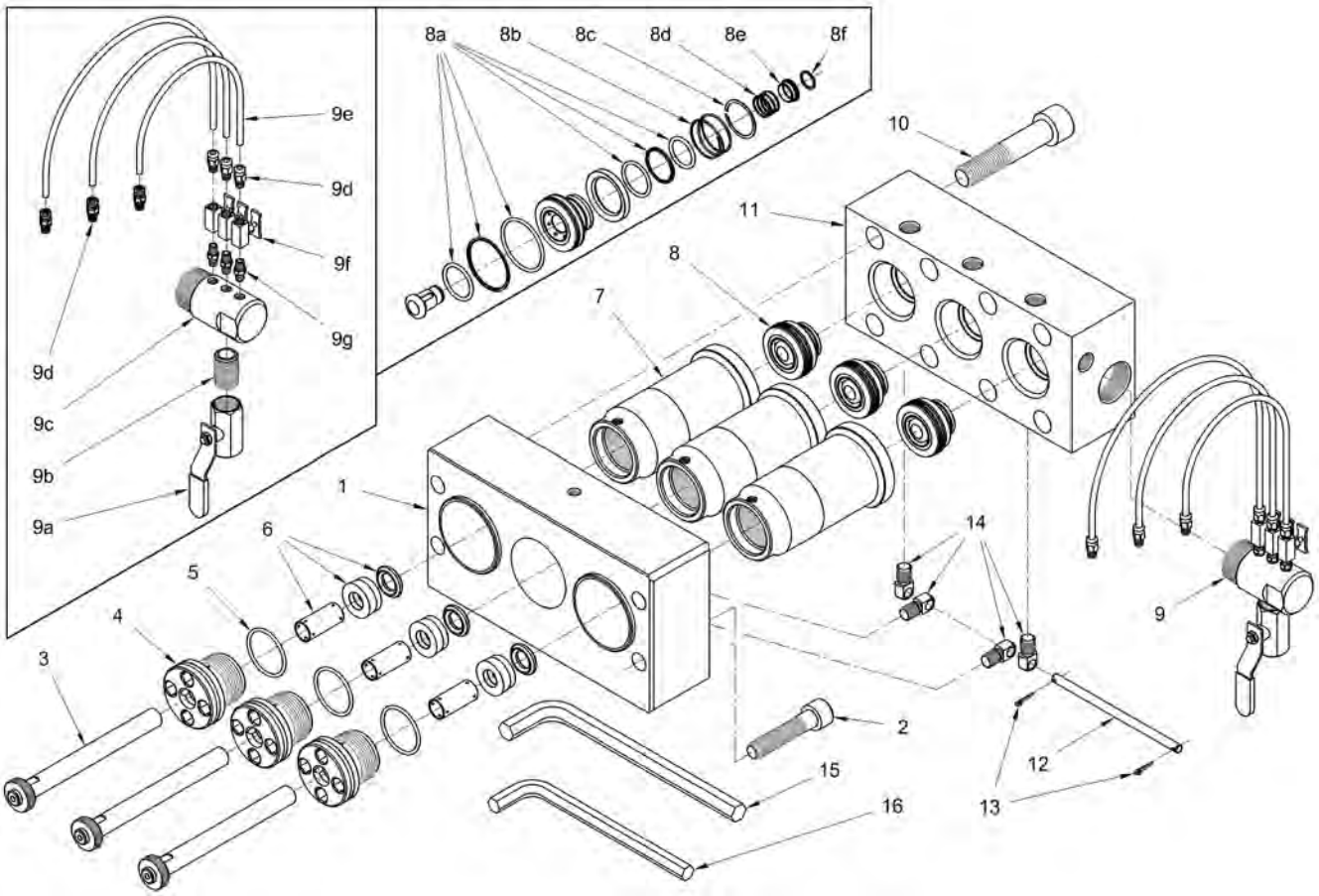

FLUID END SPECS

PART NO.	PLUNGER SIZE			CONNECTION TYPES			PUMP DISPLACEMENT AT SPECIFIED PUMP SPEEDS*								MAX. OPERATING PRESSURE	
	NO.	DIAMETER					200 RPM		300 RPM		400 RPM		500 RPM			
		in	mm	TOP PORTS	DISCHARGE PORTS	SUPPLY PORT	gpm	lpm	gpm	lpm	gpm	lpm	gpm	lpm	psi	bar
55270	8	.800	20.32	1/2" NPT Female	1/2" NPT Female	1-1/2" NPT Female	4.9	18	7.3	28	9.8	37	12.2	46	15,000	1034
55275	9	.900	22.86				6.2	23	9.3	35	12.4	47	15.5	59	12,500	861
55280	10	1.00	25.40				7.6	29	11.4	43	15.3	58	19.1	72	10,000	689
55285	11	1.125	28.58				9.7	37	14.5	55	19.3	73	24.2	92	8,000	551

* Displacement (flow) values represented refer to "theoretical" flow, neglecting inefficiency resulting from compressibility of water and expansion of pressure bearing components. Performance data is based on power end specifications published by the original equipment manufacturer; however, some power ends may differ from those used to determine the values above. Contact a Jetstream Solutions Provider for help with fluid end selection.

PART BREAKDOWN

ITEM	PART NO.	DESCRIPTION	ITEM	PART NO.	DESCRIPTION
1	55267	Adapter Plate	8b	26476	Discharge Valve Spring
2	29748	Adapter Plate Bolt	8c	26470	Retaining Ring
3	55489	#8 Plunger	8d	26472	Suction Valve Spring
	54501	#9 Plunger	8e	51664	Spring Retainer
	54502	#10 Plunger	8f	26474	Retaining Ring
	54503	#11 Plunger	9	51695	Lube Harness
4	54428	#8 Gland Nut	9a	27101	Ball Valve
	54506	#9 Gland Nut	9b	25946	Nipple
	54507	#10 Gland Nut	9c	53242	Lube Manifold
	54508	#11 Gland Nut	9d	27732	Hose Fitting
5	26416	O-Ring	9e	27740	Hose (Order in feet)
6	51691	#8 Packing Set	9f	27475	Needle Valve
	51674	#9 Packing Set	9g	26465	Nipple
	51697	#10 Packing Set	10	26462	Manifold Bolt
	52233	#11 Packing Set	11	55266	Manifold
7	55268	#8 Stuffing Box	12	51666	Trunnion Rod
	55269	#9, #10 Stuffing Box	13	26468	Cotter Pin
	55271	#11 Stuffing Box	14	51659	Trunnion
8	51675	Uni-Valve	15	50064	3/4" Pump Wrench
8a	50034	Uni-Valve Seal Kit	16	26544	5/8" Pump Wrench

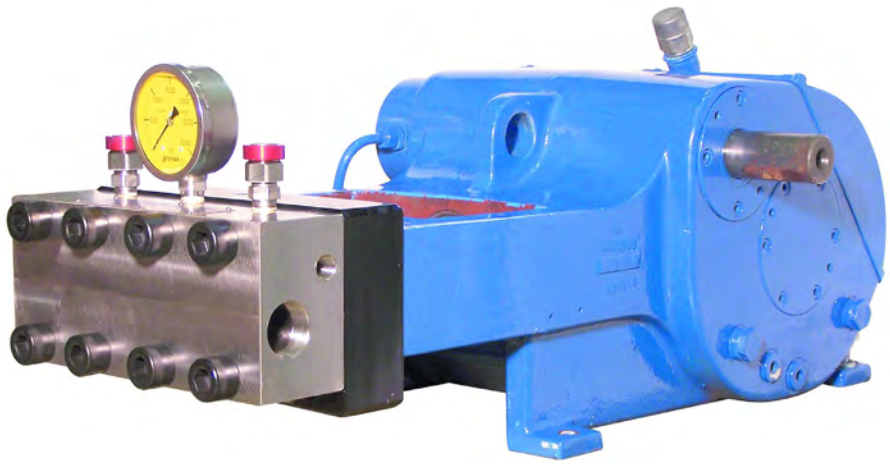

MULTIPLE MANUFACTURER UPGRADE

MODEL 30150

UNX™ FLUID END UPGRADE
AMERICAN AERO | WHITFORD FE145
NLB 10125
UNION QD100 (POWER END)

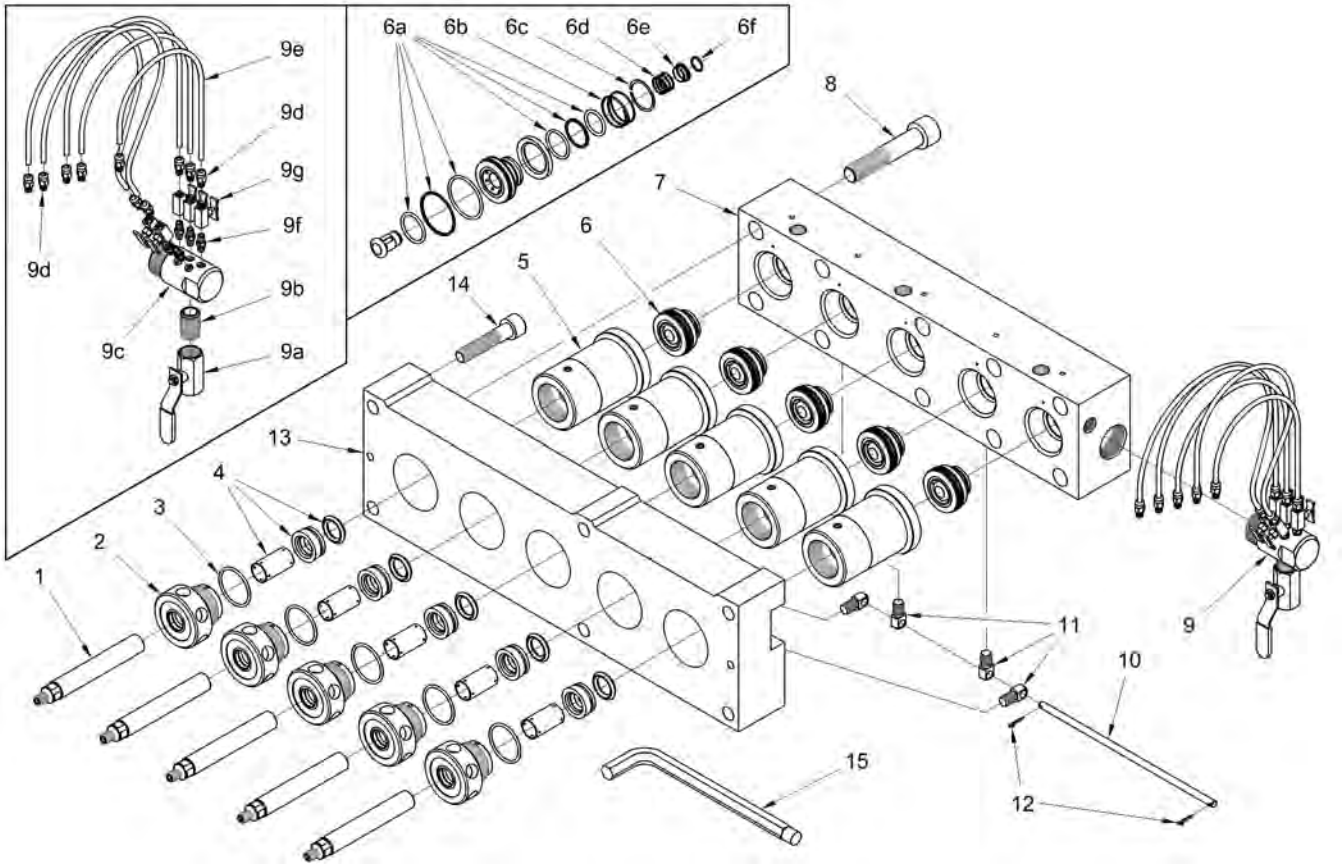

FLUID END SPECS

PART NO.	PLUNGER SIZE			CONNECTION TYPES			PUMP DISPLACEMENT AT SPECIFIED PUMP SPEEDS*								MAX. OPERATING PRESSURE	
	NO.	DIAMETER					200 RPM		300 RPM		400 RPM		500 RPM			
		in	mm	TOP PORTS	DISCHARGE PORTS	SUPPLY PORT	gpm	lpm	gpm	lpm	gpm	lpm	gpm	lpm	psi	bar
51820	7	.735	18.67	1/2" NPT Female	1/2" NPT Female	1-1/2" NPT Female	8.3	31	11.0	42	13.8	52	15.2	58	15,000	1034
51825	8	.800	20.32				9.8	37	13.1	49	16.3	62	18.0	68	12,500	861
51830	9	.900	22.86				12.4	47	16.5	63	20.7	78	22.7	86	10,000	689
51835	10	1.000	25.40				15.3	58	20.4	77	25.5	97	28.0	106	8,000	551
52285	11	1.125	28.58				19.6	73	25.8	98	32.3	122	35.5	134	6,000	413

* Displacement (flow) values represented refer to "theoretical" flow, neglecting inefficiency resulting from compressibility of water and expansion of pressure bearing components. Performance data is based on power end specifications published by the original equipment manufacturer; however, some power ends may differ from those used to determine the values above. Contact a Jetstream Solutions Provider for help with fluid end selection.

PART BREAKDOWN

ITEM	PART NO.	DESCRIPTION	ITEM	PART NO.	DESCRIPTION
1	51690	#7 Plunger	6b	26476	Discharge Valve Spring
	51696	#8 Plunger	6c	26470	Retaining Ring
	51667	#9 Plunger	6d	26472	Suction Valve Spring
	51694	#10 Plunger	6e	51664	Spring Retainer
	52983	#11 Plunger	6f	26474	Retaining Ring
2	51617	#7 Gland Nut	7	50887	Manifold
	51619	#8 Gland Nut	8	26462	Manifold Bolt
	51621	#9 Gland Nut	9	51490	Lube Harness
	51623	#10 Gland Nut	9a	27101	Ball Valve
	52231	#11 Gland Nut	9b	25946	Nipple
3	26416	O-Ring	9c	53793	Lube Manifold
4	51689	#7 Packing Set	9d	27732	Hose Fitting
	51691	#8 Packing Set	9e	27740	Hose (Order in feet)
	51674	#9 Packing Set	9f	26465	Nipple
	51697	#10 Packing Set	9g	27475	Needle Valve
	52233	#11 Packing Set	10	51016	Trunnion Rod
5	51611	#7, #8 Stuffing Box	11	51659	Trunnion
	51671	#9, #10 Stuffing Box	12	26468	Cotter Pin
	52232	#11 Stuffing Box	13	50897	Adapter Plate
6	51675	Uni-Valve	14	25427	Adapter Plate Bolt
6a	50034	Uni-Valve Seal Kit	15	50064	Pump Wrench

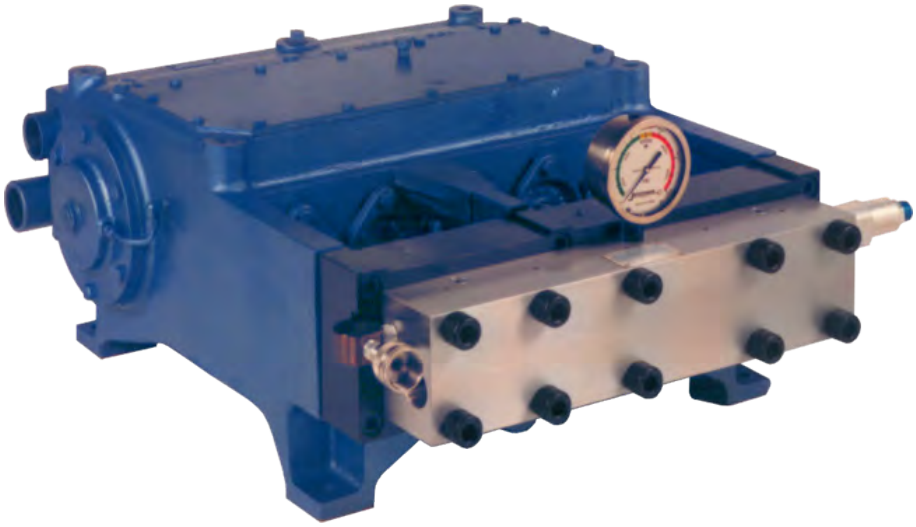

PUMP ACCESSORIES

EVERYTHING YOU NEED TO SUCCEED

Jetstream's full range of recommended pump and fluid end parts and accessories help you succeed on every job. From pump tools, valves, hydro-throttles, filters, and other add-ons, to gear drives and spare parts packages, we have everything you need to maximize performance of your pump and ensure a safe and uninterrupted workday.

The Pump Accessories section includes the following parts and packages:

- Fluid End Spare Parts Packages
- Pump Tools (Wrenches, Studs, Lubricants)
- Filters and Filter Assemblies
- Pressure Gauges
- Rupture Disc Assembly and Discs
- Valves (Bypass, Air-Operated, Hydraulic, Electric, Multi-Gun Valves)
- Hydro-Throttle Assemblies
- Multi-Unit Manifold
- Hydrostatic Test Valve (HTV)

SPARE PARTS PACKAGES

FOR UNx™ FLUID ENDS

A must-have for field repairs, these packages include all major fluid end replacement parts packaged together for easy transport and storage.

- Available for most 15K UNx fluid ends
- Packaged in a top-of-the-line, waterproof case with tough custom foam inlay
- Contents: 1 or 3 Plungers, 3 Uni-Valves, 3 Packing Sets, 3 Uni-Valve Seal Kits, Locking waterproof case and keys, 10 Burst Discs (5 each at primary and secondary relief pressures, or 10 at the same relief pressure if only one rupture disc holder is used)

1 PLUNGER PACKAGES

PART NO.	PRESSURE (PSI)	DESCRIPTION	PART NO.	PRESSURE (PSI)	DESCRIPTION	PART NO.	PRESSURE (PSI)	DESCRIPTION
S1301-6-11-S	6,000	3015 #11	S142H-10-11-S	10,000	4215HF #11	FLUID END CONVERSIONS - 1 PLUNGER PKGS		
S1301-8-10-B	8,000	3015 #10	S142H-10-11-B	10,000	4215HF #11	S1300-6-11-B	6,000	3015B,N,W #11
S1301-8-10-S	8,000	3015 #10	S142H-10-12-B	10,000	4215HF #12	S1300-6-11-S	6,000	3015B,N,W #11
S1301-8-11-B	8,000	3015 #11	S142H-10-12-S	10,000	4215HF #12	S1300-8-10-B	8,000	3015B,N,W #10
S1301-8-11-S	8,000	3015 #11	S142H-10-13-S	10,000	4215HF #13	S1300-8-10-S	8,000	3015B,N,W #10
S1301-10-9-B	10,000	3015 #9	S142H-10-13-B	10,000	4215HF #13	S1300-8-11-B	8,000	3015B,N,W #11
S1301-10-9-S	10,000	3015 #9	S142H-10-15-S	10,000	4215HF #15	S1300-8-11-S	8,000	3015B,N,W #11
S1301-10-10-B	10,000	3015 #10	S142H-10-15-B	10,000	4215HF #15	S1300-10-10-B	10,000	3015B,N,W #10
S1301-10-10-S	10,000	3015 #10	S142H-12-10-B	12,500	4215HF #10	S1300-10-10-S	10,000	3015B,N,W #10
S1301-12-8-B	12,500	3015 #8	S142H-12-10-S	12,500	4215HF #10	S1300-10-9-B	10,000	3015B,N,W #9
S1301-12-8-S	12,500	3015 #8	S142H-12-11-B	12,500	4215HF #11	S1300-10-9-S	10,000	3015B,N,W #9
S1301-12-9-B	12,500	3015 #9	S142H-12-11-S	12,500	4215HF #11	S1300-12-8-B	12,500	3015B,N,W #8
S1301-12-9-S	12,500	3015 #9	S142H-12-12-B	12,500	4215HF #12	S1300-12-8-S	12,500	3015B,N,W #8
S1301-15-7-B	15,000	3015 #7	S142H-12-12-S	12,500	4215HF #12	S1300-12-9-B	12,500	3015B,N,W #9
S1301-15-7-S	15,000	3015 #7	S142H-12-13-B	12,500	4215HF #13	S1300-12-9-S	12,500	3015B,N,W #9
S1301-15-8-B	15,000	3015 #8	S142H-12-13-S	12,500	4215HF #13	S1300-15-7-B	15,000	3015B,N,W #7
S1301-15-8-S	15,000	3015 #8	S142H-15-10-S	15,000	4215HF #10	S1300-15-7-S	15,000	3015B,N,W #7
S142H-5-15-S	5,000	4215HF #15	S142H-15-10-B	15,000	4215HF #10	S1300-15-8-B	15,000	3015B,N,W #8
S142H-6-15-S	6,000	4215HF #15	S142H-15-11-S	15,000	4215HF #11	S1300-15-8-S	15,000	3015B,N,W #8
S142H-6-16-S	6,000	4215HF #16	S142H-15-11-B	15,000	4215HF #11	S1371-15-8-B	15,000	3015W GEN I #8
S142H-8-13-S	8,000	4215HF #13	S142H-15-12-B	15,000	4215HF #12	S1371-15-8-S	15,000	3715W GEN I #8
S142H-8-13-B	8,000	4215HF #13	S142H-15-12-S	15,000	4215HF #12	S137W-8-11-B	8,000	3715W,WZ #11
S142H-8-15-S	8,000	4215HF #15	S142H-15-9-B	15,000	4215HF #9	S137W-8-11-S	8,000	3715W,WZ #11
S142H-8-15-B	8,000	4215HF #15	S142H-15-9S	15,000	4215HF #9	S137W-10-10-B	10,000	3715W,WZ #10
S142H-8-16-S	8,000	4215HF #16				S137W-10-10-S	10,000	3715W,WZ #10
S142H-8-16-B	8,000	4215HF #16				S137W-12-9-B	12,500	3715W,WZ #9

3 PLUNGER PACKAGES

PART NO.	PRESSURE (PSI)	DESCRIPTION	PART NO.	PRESSURE (PSI)	DESCRIPTION	PART NO.	PRESSURE (PSI)	DESCRIPTION
SP301-6-11-B	6,000	3015 #11	SP421-15-9-B	15,000	4215 #9	FLUID END CONVERSIONS - 3 PLUNGER PKGS		
SP301-6-11-S	6,000	3015 #11	SP421-15-9-S	15,000	4215 #9	SP300-6-11-B	6,000	3015B,N,W #11
SP301-8-10-B	8,000	3015 #10	SP421-15-10-B	15,000	4215 #10	SP300-6-11-S	6,000	3015B,N,W #11
SP301-8-10-S	8,000	3015 #10	SP421-15-10-S	15,000	4215 #10	SP300-8-10-B	8,000	3015B,N,W #10
SP301-8-11-B	8,000	3015 #11	SP421-15-11-B	15,000	4215 #11	SP300-8-10-S	8,000	3015B,N,W #10
SP301-8-11-S	8,000	3015 #11	SP421-15-11-S	15,000	4215 #11	SP300-8-11-B	8,000	3015B,N,W #11
SP301-10-9-B	10,000	3015 #9	SP421-15-12-B	15,000	4215 #12	SP300-8-11-S	8,000	3015B,N,W #11
SP301-10-9-S	10,000	3015 #9	SP421-15-12-S	15,000	4215 #12	SP300-10-9-B	10,000	3015B,N,W #9
SP301-10-10-B	10,000	3015 #10	SP42H-5-15-S	5,000	4215HF #15	SP300-10-9-S	10,000	3015B,N,W #9
SP301-10-10-S	10,000	3015 #10	SP42H-6-15-S	6,000	4215HF #15	SP300-10-10-B	10,000	3015B,N,W #10
SP301-10-11-S	10,000	3015 #11	SP42H-6-16-S	6,000	4215HF #16	SP300-10-10-S	10,000	3015B,N,W #10
SP301-12-8-B	12,500	3015 #8	SP42H-6-18-B	6,000	4215HF #18	SP300-12-8-B	12,500	3015B,N,W #8
SP301-12-8-S	12,500	3015 #8	SP42H-8-13-B	8,000	4215HF #13	SP300-12-8-S	12,500	3015B,N,W #8
SP301-12-9-B	12,500	3015 #9	SP42H-8-13-S	8,000	4215HF #13	SP300-12-9-B	12,500	3015B,N,W #9
SP301-12-9-S	12,500	3015 #9	SP42H-8-15-B	8,000	4215HF #15	SP300-12-9-S	12,500	3015B,N,W #9
SP301-15-7-B	15,000	3015 #7	SP42H-8-15-S	8,000	4215HF #15	SP300-15-7-B	15,000	3015B,N,W #7
SP301-15-7-S	15,000	3015 #7	SP42H-8-16-B	8,000	4215HF #16	SP300-15-7-S	15,000	3015B,N,W #7
SP301-15-8-B	15,000	3015 #8	SP42H-8-16-S	8,000	4215HF #16	SP300-15-8-B	15,000	3015B,N,W #8
SP301-15-8-S	15,000	3015 #8	SP42H-10-11-B	10,000	4215HF #11	SP300-15-8-S	15,000	3015B,N,W #8
SP301-15-9-B	15,000	3015 #9	SP42H-10-11-S	10,000	4215HF #11	SP371-15-8-B	15,000	3715W GEN I #8
SP301-15-9-S	15,000	3015 #9	SP42H-10-12-B	10,000	4215HF #12	SP371-15-8-S	15,000	3715W GEN I #8
SP421-5-15-S	5,000	4215 #5	SP42H-10-12-S	10,000	4215HF #12	SP37W-8-11-B	8,000	3715W,WZ #11
SP421-6-15-S	6,000	4215 #6	SP42H-10-13-B	10,000	4215HF #13	SP37W-8-11-S	8,000	3715W,WZ #11
SP421-8-13-B	8,000	4215 #13	SP42H-10-13-S	10,000	4215HF #13	SP37W-10-10-B	10,000	3715W,WZ #10
SP421-8-13-S	8,000	4215 #13	SP42H-10-15-B	10,000	4215HF #15	SP37W-10-10-S	10,000	3715W,WZ #10
SP421-8-15-B	8,000	4215 #15	SP42H-10-15-S	10,000	4215HF #15	SP37W-15-8-B	15,000	3715W,WZ #8
SP421-8-15-S	8,000	4215 #15	SP42H-12-10-B	12,500	4215HF #10	SP37W-15-8-S	15,000	3715W,WZ #8
SP421-10-11-B	10,000	4215 #11	SP42H-12-10-S	12,500	4215HF #10	SP37W-12-9-B	12,500	3715W,WZ #9
SP421-10-11-S	10,000	4215 #11	SP42H-12-11-B	12,500	4215HF #11	SP37W-12-9-S	12,500	3715W,WZ #9
SP421-10-12-B	10,000	4215 #12	SP42H-12-11-S	12,500	4215HF #11			
SP421-10-12-S	10,000	4215 #12	SP42H-12-12-B	12,500	4215HF #12			
SP421-10-13-B	10,000	4215 #13	SP42H-12-12-S	12,500	4215HF #12			
SP421-10-13-S	10,000	4215 #13	SP42H-12-13-B	12,500	4215HF #13			
SP421-10-15-B	10,000	4215 #15	SP42H-12-13-S	12,500	4215HF #13			
SP421-10-15-S	10,000	4215 #15	SP42H-15-9-B	15,000	4215HF #9			
SP421-12-10-B	12,500	4215 #10	SP42H-15-9-S	15,000	4215HF #9			
SP421-12-10-S	12,500	4215 #10	SP42H-15-10-B	15,000	4215HF #10			
SP421-12-11-B	12,500	4215 #11	SP42H-15-10-S	15,000	4215HF #10			
SP421-12-11-S	12,500	4215 #11	SP42H-15-11-B	15,000	4215HF #11			
SP421-12-12-B	12,500	4215 #12	SP42H-15-11-S	15,000	4215HF #11			
SP421-12-12-S	12,500	4215 #12	SP42H-15-12-B	15,000	4215HF #12			
SP421-12-13-B	12,500	4215 #13	SP42H-15-12-S	15,000	4215HF #12			
SP421-12-13-S	12,500	4215 #13	P42H-S18	6,800	4215HF GEN II #18			

TOOLS

PUMP WRENCHES

The only special tool needed to work on a Jetstream UNx pump. For use with manifold and gland nut.

SIZE 7/8" PART NO. 50889		SIZE 3/4" PART NO. 50064	SIZE 5/8" PART NO. 26544
6015	4515B	3015	3115T
5015Q	4215N	3015B	3515Q
4215	4215QN	3015N	3715W
3615	4015B	3015QN	3715WZ
5015G	3715B	3015Q	
		3015W	

MANIFOLD MOUNTING STUDS

For easy and safe removal of manifolds during pressure conversions that require a manifold change (e.g. 10,000psi-40,000psi). To use, replace the top two outer manifold bolts with the mounting studs. Then, remove all bolts and the trunnion rod (hinge rod). The manifold can then be easily slid out and replaced with another. Sold individually.

FOR USE WITH THE FOLLOWING MODELS		
PART NO. 62093	PART NO. 54261	PART NO. 56742
6015	4215	3015
	3615	3015B
	4515B	3015N
	4215N	
	4215QN	
	4015B	
	3715B	
	3715WZ	
	3515Q	
	3115T	

OIL SEAL PULLER PLATES

For easy and safe removal of oil seals on bareshaft pumps.

PART NO.	PUMP SERIES
56949	3600/4200/5200
56950	3000

BELT TENSION GAUGE

Ensure pump drive belts are properly tensioned for proper pump operation and maximum belt life. For use with V-belts.
Part No. 26993

BELT TENSION GAUGE

For use with Power Band and synchronous belts.
Part No. 62140

VALVE PULLER

The perfect tool for easily extracting uni-valves from the manifold. Sold individually.
Part No. 70179

O-RING PICK

6-7/8" length with cushioned grip
Part No. 63443

3/16" T-WRENCH (HEX KEY)

Hex key for ease of nozzle maintenance. Short Length with comfort handle.
Part No. 63442

1/4" T-WRENCH (HEX KEY)

Hex key for ease of nozzle maintenance. Short Length with comfort handle.
Part No. 63814

GLAND NUT TOOL

3/4" Drive tool for ease of gland nut removal for pumps.

PART NO.	PUMP SERIES
62110	4200/5000
66607	3000
66608	6000

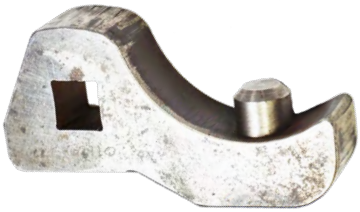

PUMP OPERATIONS & MAINTENANCE DVD

An excellent learning tool, the Pump Operations and Maintenance DVD from Jetstream covers important topics such as waterblast safety, waterblast unit and pump maintenance and operation.
Part No. 70002

1/2" VALVES
Part No. 53440

Part No. 55120

3/4" VALVES
Part No. 53845

Part No. 54995

1" VALVES
Part No. 53935

Part No. J55705

DUMP-STYLE DIVERTER VALVES

AIR-OPERATED

The Air-Operated Diverter Valve allows an operator to remotely control pressure in cleaning applications up to 15,000 psi. When air is sent to the cylinder, the valve closes and allows the system to build pressure. The valve opens when the air is exhausted, reducing system pressure to near atmospheric.

- 30-second field replaceable cartridge design for minimal downtime
- Remote pneumatic operation for reduced operator fatigue and added convenience and safety
- Pipe threaded (NPT) inlet and outlet
- Heavy-duty air cylinder
- All pressure-bearing components precision machined stainless steel
- Available in three sizes with or without plated steel base

ASSEMBLY PART NO.	MOUNTING STYLE	CONNECTION TYPE		MAXIMUM FLOW RATE		MAX. OPERATING PRESSURE		INLET AIR PRESSURE				WEIGHT	
								MIN.		MAX.			
		INLET & OUTLET	DIFFUSER OUTLET	gpm	lpm	psi	bar	psi	bar	psi	bar	lb	kg
53440	Pump	1/2" NPT Female	3/4" NPT Female	35	130	15,000	1034	70	4.8	125	8.6	6.5	2.9
55120	Base											16.1	7.3
53845	Pump	3/4" NPT Female	1" NPT Female	75	284							7.7	3.5
54995	Base											17.3	7.9
53935	Pump	1" NPT Female	1-1/4" NPT Female	125	473							12.7	5.8
J55705	Base											22.3	10.1

REPLACEMENT CARTRIDGE

Diverter valve utilizes a cartridge, to completely rebuild the dump valve in about 30 seconds.

Part No. 50902
(for 53440)

Part No. 53915
(for 53935)

Part No. 52750
(for 53845)

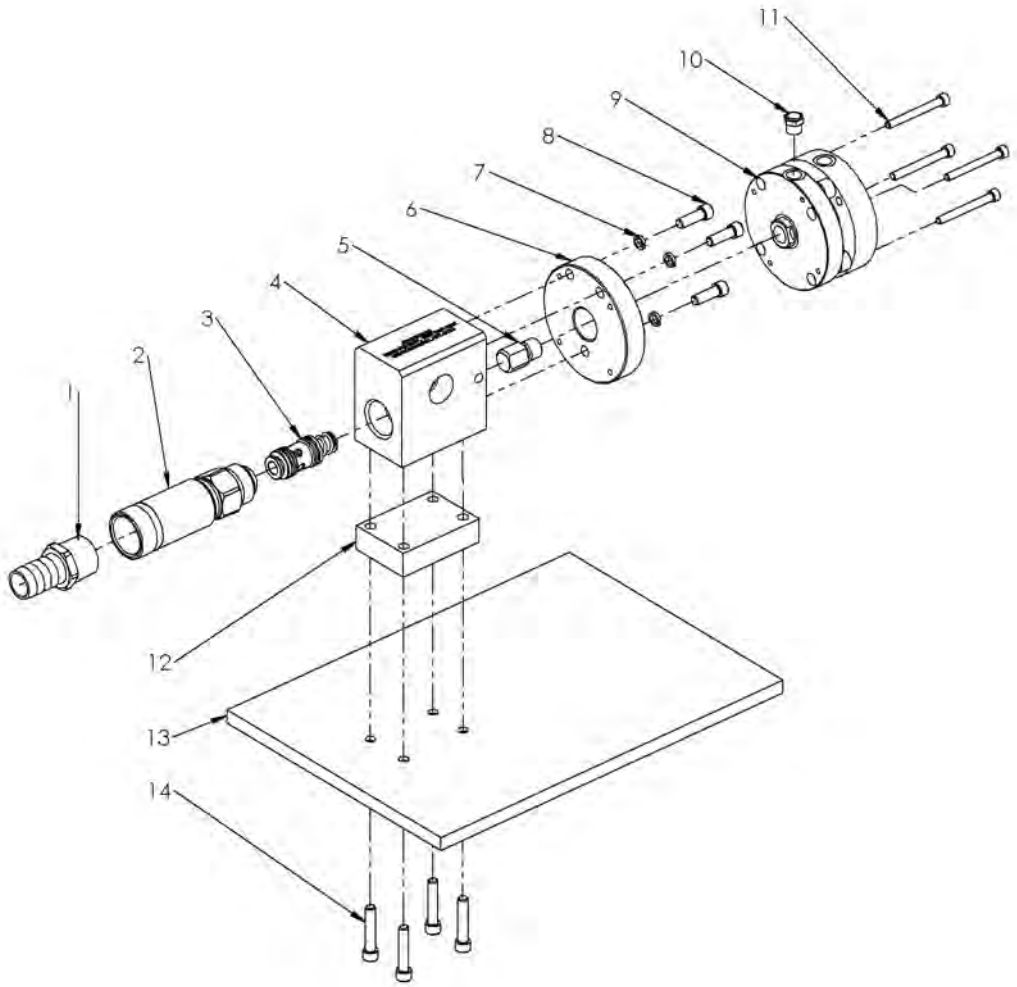

PART BREAKDOWN

ITEM	PART NO.	DESCRIPTION	ITEM	PART NO.	DESCRIPTION
1	25796	Hose Barb, 3/4" (for 53440)	7	J70633	Washer (53440 & 53845)
	27757	Hose Barb, 1" (for 53845)	8	25206	Capscrew (53440 & 53845)
2	50460	Diffuser, C-15 Series (53440)		J70816	Capscrew (53935)
	51638	Diffuser, CF 3/4" Mag (53845)	9	27251	Air Cylinder (53440 & 53845)
	53959	Diffuser, DCF-15 1" Mag (53935)		54342	Air Cylinder, 2.5" (53935)
3	50902	Cartridge, C-15 (53440)	10	58848	Muffler (53440 & 53845)
	52750	Cartridge, CF Mag (53845)		28364	Muffler (53935)
	53915	Cartridge, C-15 Ultra Mag (53935)	11	27107	Capscrew (53440 & 53845)
4	53368	Body, Durasafe DCF-15 (53440)		65656	Capscrew (53935)
	53549	Body, Durasafe DCF-15 Mag (53845)	12*	53788	Spacer
	53954	Body, DCF-15 1" Ultra Mag (53935)	13*	53384	Base Plate
5	56999	Pusher, Air Cylinder (53440 & 53845)	14*	26126	Capscrew
	53424	Pusher, Air Cylinder (53935)			
6	J56366	Adapter Plate (53440 & 53845)			
	54321	Mounting Plate (53935)			

*Not shown.

DUMP STYLE DIVERTER VALVES

ELECTRIC/AIR-OPERATED

The Electric/Air-Operated Diverter Valve allows an operator to remotely control pressure in cleaning applications up to 15,000 psi, specifically in automated cleaning processes. Reduces operator fatigue by actuating the system electronically rather than mechanically.

When electric voltage is present, the air cylinder closes the valve and allows the system to build pressure. The valve opens when the voltage is removed, reducing system pressure to near atmospheric.

- Quick cartridge overhaul for easy field maintenance
- Remote operation for added operator convenience and safety
- Electric operation for reduced operator fatigue
- Valve operates at air pressures between 70-125 psi (4.8-8.6 bar) using a 1/8" NPT Female air connection

ASSEMBLY PART NO.	VOLTAGE	INLET & OUTLET CONNECTION	MAXIMUM FLOW RATE		MAX. OPERATING PRESSURE		DIMENSIONS (H X W X D)		WEIGHT	
			gpm	lpm	psi	bar	in	mm	lb	kg
53165	12 VDC	1/2" NPT Female	35	130	15,000	1034	12 x 8 x 17	305 x 203 x 432	36	16
53695	120 VAC									
54724	12 VDC	1" NPT Female	125	473						
59459	110 VAC									
54777	24 VDC									

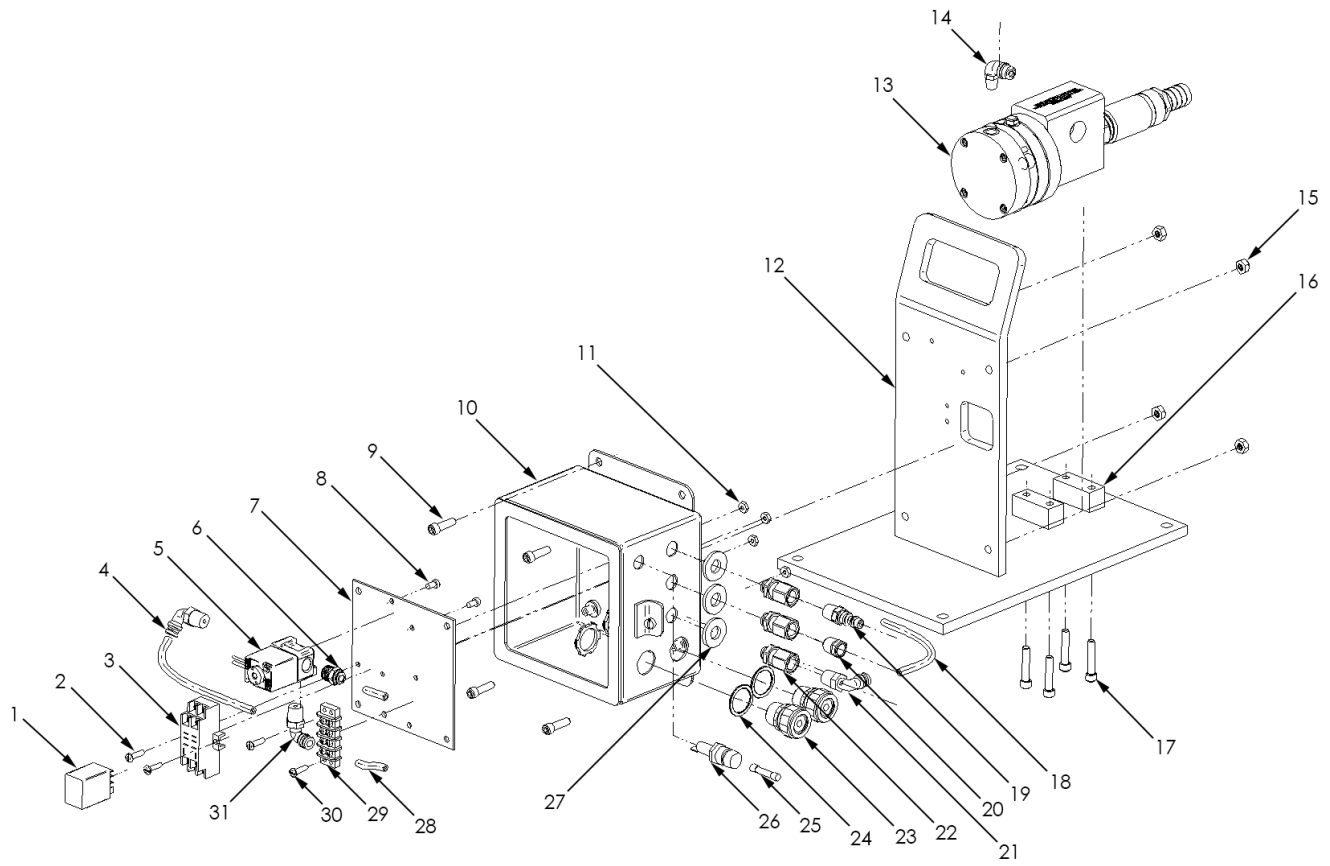

PART BREAKDOWN

ITEM	PART NO.	DESCRIPTION	ITEM	PART NO.	DESCRIPTION
1	27349	Relay, 12 VDC	15	26711	Nut
	27631	Relay, 120 VAC	16	53203	Mounting Base
	29155	Relay, 24 VDC	17	26126	Capscrew
2	58864	Capscrew	18	27740	Plastic Tubing
3	29158	Relay Socket	19	28223	Nipple, Q.D.
4	27740	Plastic Tubing	20	28364	Muffler
5	65002	Valve, 3 Way, 12 VDC	21	28367	Elbow
	65001	Valve, 3 Way, 120 VAC	22	65011	Bulkhead Fitting
	27783	Valve, 3 Way, 24 VDC	23	64998	Gland
6	J70518	Adapter	24	64999	Washer
7	58868	Mounting Panel	25	27348	Fuse
8	27380	Capscrew	26	25644	Fuse Holder
9	58865	Capscrew	27	65012	Washer
10	58867	Electrical Box	28	27740	Plastic Tubing
11	29799	Nut	29	27347	Block, Terminal
12	53203	Mounting Base	30	58864	Capscrew
13	53440	Air-Operated Valve, 1/2"	31	28367	Elbow
	53935	Air-Operated Valve, 1"			
14	28367	Elbow			

DUMP STYLE DIVERTER VALVES

HYDRAULIC-OPERATED

3/4" VALVES
Part No. 62003

The Hydraulic-Operated Diverter Valve allows an operator to remotely control pressure in cleaning applications up to 15,000 psi, specifically in automated cleaning processes. Reduces operator fatigue by actuating the system hydraulically rather than mechanically.

1" VALVES
Part No. 65368

When hydraulic pressure is sent to the cylinder, the valve closes and allows the system to build pressure. The valve opens when the hydraulic pressure is exhausted, reducing system pressure to near atmospheric.

- Quick cartridge overhaul for easy field maintenance
- Remote operation for added operator convenience and safety

ASSEMBLY PART NO.	MOUNTING STYLE	CONNECTION TYPE		MAXIMUM FLOW RATE		MAX. OPERATING PRESSURE		HYD. PRESSURE REQD.				WEIGHT	
								MIN.		MAX.			
		INLET & OUTLET	DIFFUSER OUTLET	gpm	lpm	psi	bar	psi	bar	psi	bar	lb	kg
62003	Pump	3/4" NPT Female	1" NPT Female	75	284	15,000	1034	500	34.5	5000	344.7	7.7	3.5
65368	Pump	1" NPT Female	1-1/4" NPT Female	125	473							12.7	5.8

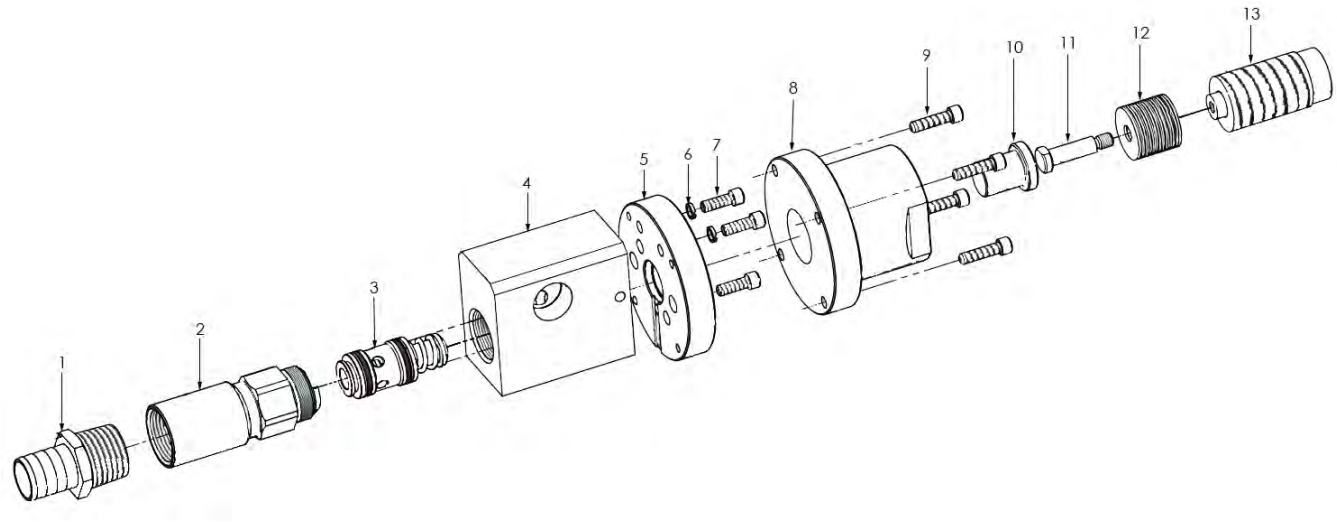

PART BREAKDOWN (PART NO. 62003)

ITEM	PART NO.	DESCRIPTION	ITEM	PART NO.	DESCRIPTION
1	27757	Hose Barb	8	60075	Adapter, Hydraulic Cylinder
2	51638	Diffuser	9	26689	Capscrew
3	52750	Cartridge	10	60025	Pusher, Hydraulic Cylinder
4	53549	Body	11	60027	Guide, Spring
5	54321	Mounting Plate	12	60026	Spring, Disc
6	J70633	Washer	13	60079	Hydraulic Cylinder
7	25206	Capscrew			

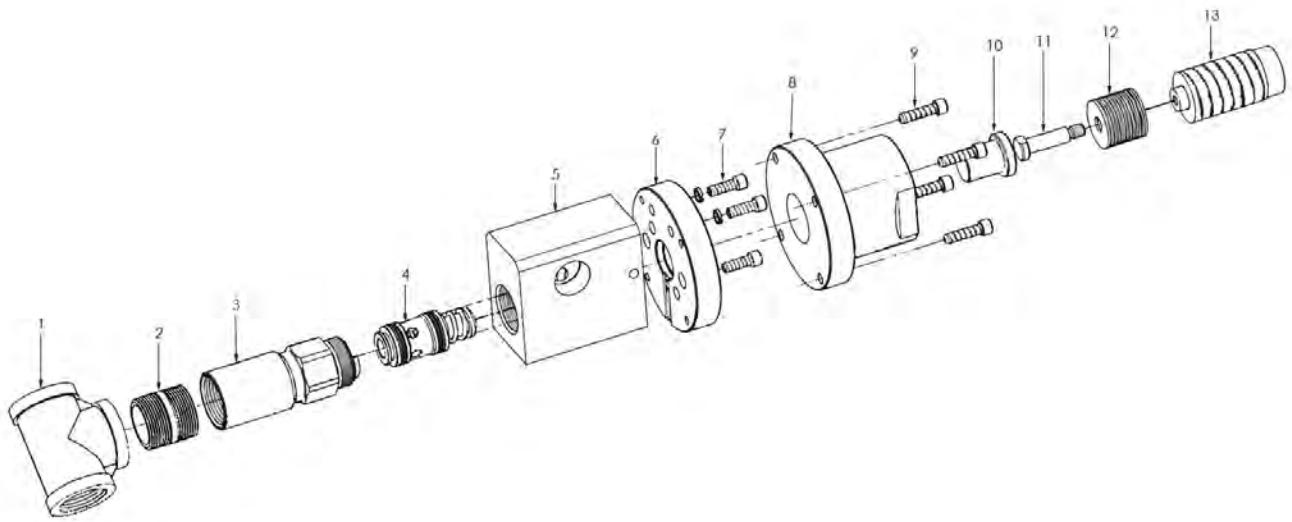

PART BREAKDOWN (PART NO. 65368)

ITEM	PART NO.	DESCRIPTION	ITEM	PART NO.	DESCRIPTION
1	62259	Tee, 1-1/4" NPT	8	60075	Adapter, Hydraulic Cylinder
2	57432	Nipple	9	26689	Capscrew
3	53959	Diffuser	10	60025	Pusher, Hydraulic Cylinder
4	53915	Cartridge	11	60027	Guide, Spring
5	53954	Body	12	60026	Spring, Disc
6	54321	Mounting Plate	13	60079	Hydraulic Cylinder
7	J70816	Capscrew			

SHUT-IN STYLE DIVERTER VALVES

AIR-OPERATED

Shut-In, Air-Operated Diverter Valves allow an operator to remotely control pressure in cleaning applications up to 15,000 psi. When air is sent to the cylinder, the valve opens to allow water to the nozzle. The valve closes when the air is exhausted, preventing water reaching the nozzle while maintaining system pressure.

- Use with plunger style pumps such as the UNx® requires the installation of a Shut-In Regulator Valve (see C-18)
- 30-second field replaceable cartridge design for minimal downtime
- Remote pneumatic operation for reduced operator fatigue and added convenience and safety
- Pipe threaded (NPT) inlet and outlet
- Heavy-duty air cylinder
- All pressure-bearing components precision machined stainless steel
- Available with or without plated steel base
- Valve operates at air pressures between 70-125 psi (4.8-8.6 bar) using a 1/8" NPT Female air connection

PART NO.	MOUNTING	INLET & OUTLET CONNECTIONS*	MAXIMUM FLOW RATE		DIMENSIONS (H X W X D)		WEIGHT		MAX. OPERATING PRESSURE	
			gpm	lpm	in	mm	lb	kg	psi	bar
53680	No Base	1/2" NPT Female	35	132	3.3 x 3.1 x 6.1	85 x 79 x 154	6.4	2.9	15,000	1034
J55710	Base-Mount				4.0 x 8.0 x 11.3	101 x 203 x 286	16.0	7.3		

*See details on all connection types in Section I.

REPLACEMENT CARTRIDGE

15,000 psi Shut-in Style Diverter Valves utilize the CPSi-15 cartridge, shown above, to completely rebuild the gun in about 30 seconds!
Part No. 60419

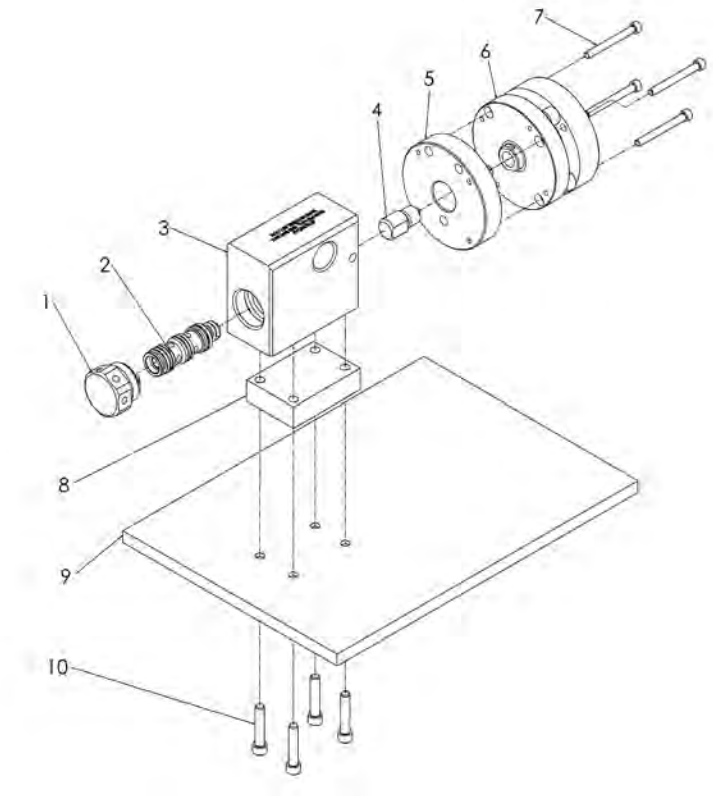

PART BREAKDOWN

ITEM	PART NO.	DESCRIPTION	ITEM	PART NO.	DESCRIPTION
1	52543	Cartridge Plug	7	27107	Capscrew
2	60419	Cartridge	8	53788	Mounting Block (Base Mounted Model)
3	53374	Body	9	53384	Base (Base Mounted Model)
4	56999	Pusher, Air Cylinder	10	26126	Capscrew (Base Mounted Model)
5	J56366	Adapter Plate	11*	25206	Adapter, Capscrew
6	27251	Air Cylinder	12*	J70633	Washer

*Not shown.

SHUT-IN STYLE DIVERTER VALVES

ELECTRIC/AIR-OPERATED

The Electric/Air-Operated Diverter Valve allows an operator to remotely control pressure in cleaning applications up to 15,000 psi, specifically in automated cleaning processes. Reduces operator fatigue by actuating the system electronically rather than mechanically.

When electric voltage is present, the valve opens to allow water to the nozzle. The valve closes when the voltage is removed, preventing the water from reaching the nozzle while maintaining system pressure.

- Use with plunger style pumps such as the UNx® requires the installation of a Shut-In Regulator Valve (see C-18)
- Quick cartridge overhaul for easy field maintenance
- Remote operation for added operator convenience and safety
- Electric operation for reduced operator fatigue
- Valve operates at air pressures between 70-125 psi (4.8-8.6 bar) using a 1/8" NPT Female air connection

PART NO.	VOLTAGE	INLET & OUTLET CONNECTIONS*	MAXIMUM FLOW RATE		MAX. OPERATING PRESSURE		DIMENSIONS (H X W X D)		WEIGHT	
			gpm	lpm	psi	bar	in	mm	lb	kg
60650	110 VAC	1/2" NPT Female	35	132	15,000	1034	12 x 8 x 17	305 x 203 x 432	36	13

*See details on all connection types in Section I.

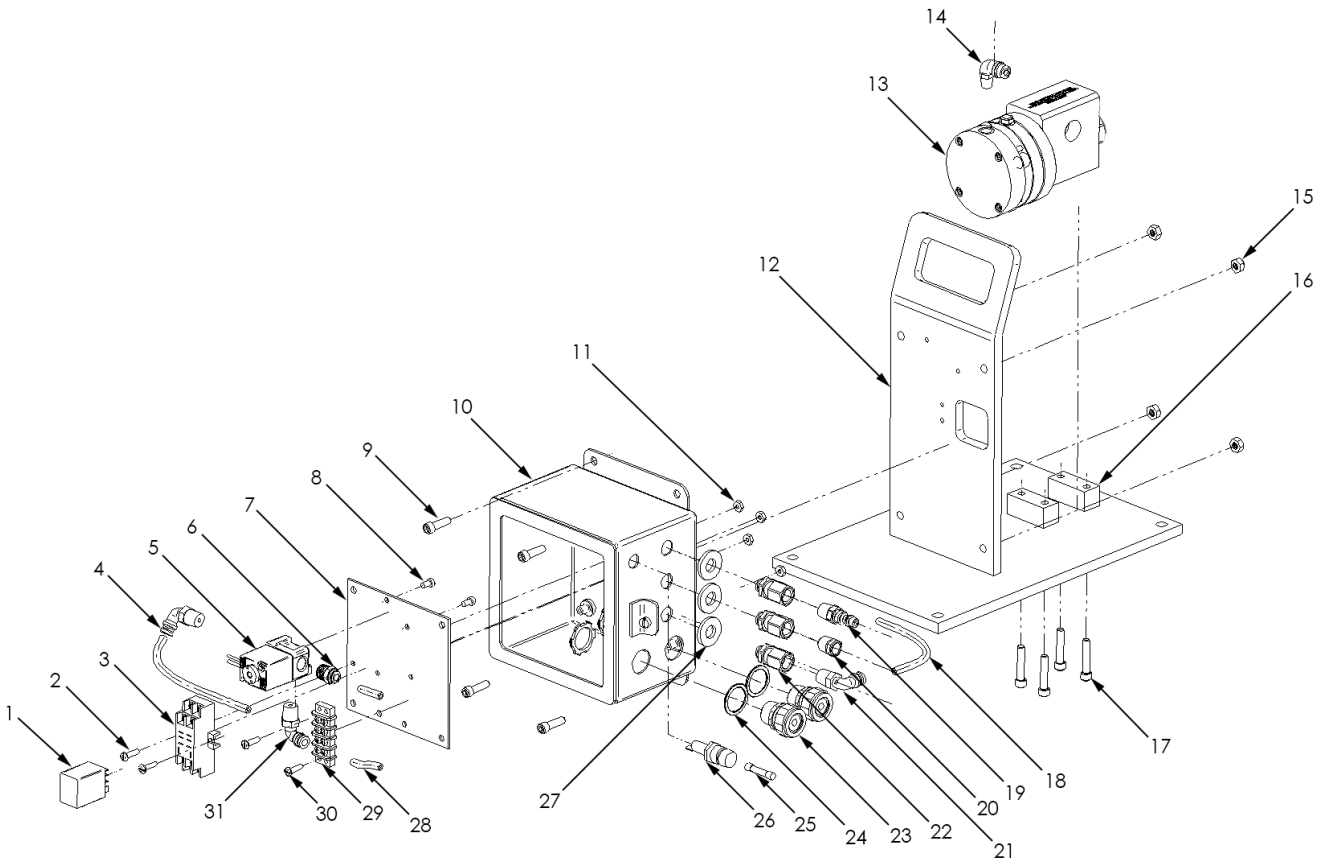

PART BREAKDOWN

ITEM	PART NO.	DESCRIPTION	ITEM	PART NO.	DESCRIPTION
1	27631	Relay	17	26126	Capscrew
2	58864	Capscrew	18	27740	Plastic Tubing
3	29158	Relay Socket	19	28223	Nipple, Q.D.
4	27740	Plastic Tubing	20	28364	Muffler
5	65002	Valve, 3 Way	21	28367	Elbow
6	52756	Adapter	22	65011	Bulkhead Fitting
7	58868	Mounting Panel	23	64998	Gland
8	27380	Capscrew	24	64999	Washer
9	58865	Capscrew	25	27348	Fuse
10	58867	Electrical Box	26	25644	Fuse Holder
11	29799	Nut	27	65012	Washer
12	53203	Mounting Base	28	27740	Plastic Tubing
13	53680	Air-Operated Valve	29	27347	Block, Terminal
14	28367	Elbow	30	58864	Capscrew
15	26711	Nut	31	28367	Elbow
16	53203	Mounting Base			

BASE-MOUNTED
Part No. 52680

BYPASS VALVES

HAND ADJUSTABLE

A bypass valve diverts a portion of pump flow to a low-pressure outlet and is used on diesel and electric units. For diesel engines, it is used to prevent bogging the engine when using flows at the low end of the pump's capability. A bypass valve is required on non-VFD electric units due to the non-adjustability of motor speed.

- Two minute field-replaceable cartridge design for minimal downtime
- Hand adjustment—no wrench needed
- Pump-mount model connects to fluid end manifold using connection package (**PN 56604**) - sold separately.
- Base-mount model connects in-line downstream and includes a protective cage and a pressure gauge for remote adjustment
- All pressure-bearing components precision machined stainless steel
- Pipe threaded (NPT) inlet and outlet connections

PUMP-MOUNTED
Part No. 53920
Part No. 57197

5215 SERIES PUMP
SIDE-MOUNTED
Part No. 67392

REPLACEMENT CARTRIDGE
Part No. 50234

PART NO.	MOUNTING	PRESSURE GAUGE INCLUDED	INLET & OUTLET CONNECTIONS*	LOW PRESSURE OUTLET CONNECTION	DIMENSIONS (H X W X D)		WEIGHT		MAX. OPERATING PRESSURE	
					in	mm	lb	kg	psi	bar
53920	Pump	No	1/2" NPT Female	1/2" NPT Female	3.2 x 3.3 x 7.9	80 x 84 x 200	11	5	15,000	1034
52680	Base	Yes			12.8 x 8.0 x 11.3	325 x 203 x 287	28	12		
57197**	Pump	No			3.2 x 3.3 x 7.9	80 x 84 x 200	11	5		
67392***	Pump (side)	No	HF Port		3.2 x 3.3 x 7.9	80 x 84 x 200	11	5		

*See details on all connection types in Section I.
**Corrosion resistant style.
***5215 Series pumps only.

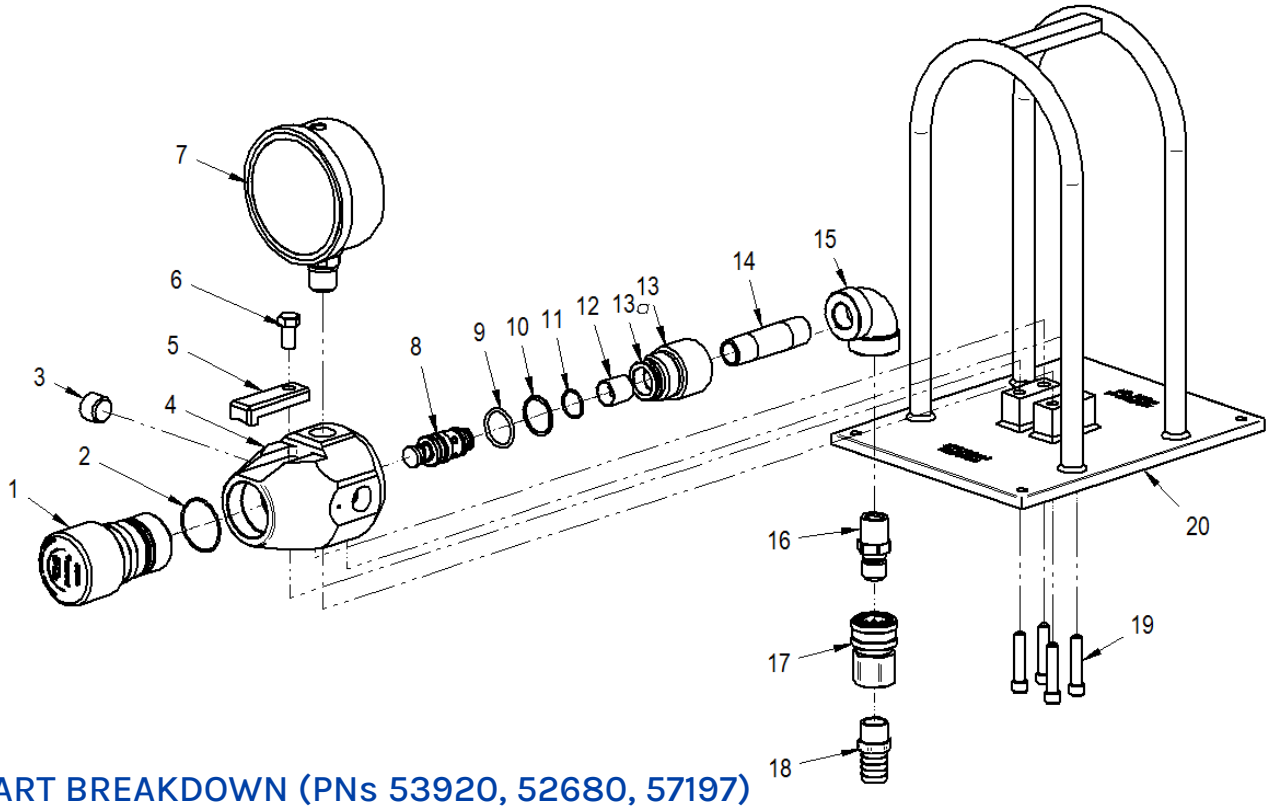

PART BREAKDOWN (PNs 53920, 52680, 57197)

ITEM	PART NO.	DESCRIPTION	ITEM	PART NO.	DESCRIPTION
1	52144	Adjuster	12	52201	Diffuser
2	25603	O-Ring	13	51771	Outlet Adapter
3	26115	Plug	13a	26509	O-Ring
4	53859	Body	14	63888	Nipple
5	50795	Locking Arm	15	71496	Elbow Fitting
6	25593	Capscrew	16	70173	QD Nipple
7	51126	Gauge (Base-Mounted Model)	17	70174	QD Coupler
8	50234	Cartridge	18	27350	Hose Barb
9	26522	O-Ring	19	25700	Capscrew (Base-Mounted Model)
10	53912	Backup Ring	20	52486	Base/Cage (Base-Mounted Model)
11	26782	O-Ring			

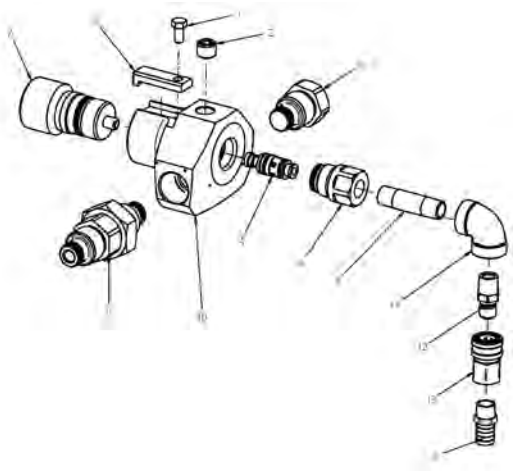

PART BREAKDOWN (PN 67392)

ITEM	PART NO.	DESCRIPTION	ITEM	PART NO.	DESCRIPTION
1	25593	Capscrew	8	60951	Plug, 15K
2	26115	Plug	9	63888	Nipple
3	27350	Hose Barb	10	67266	Body
4	50234	Cartridge	11	67310	Adapter, Clockable
5	50795	Locking Arm	12	70173	QD Nipple
6	51771	Outlet Adapter	13	70174	QD Coupler
7	52144	Adjuster	14	71496	Elbow Fitting

SHUT-IN REGULATOR VALVES

HAND ADJUSTABLE

Required for use with shut-in systems on plunger pumps, the regulator valve maintains constant system pressure when operating one or more shut-in guns with a single pump. When a gun is disengaged, the regulator automatically adjusts to shift the excess flow to a low pressure outlet while maintaining system pressure.

- Two-minute field-replaceable cartridge design for minimal downtime
- Hand adjustment—no wrench needed
- Pump-mount model connects to fluid end manifold
- Base-mount model connects in-line downstream and includes a protective cage and a pressure gauge for remote adjustment
- All pressure-bearing components precision machined stainless steel
- Three operating pressure ranges available. Switching between ranges requires only a cartridge changeout.
- Pipe threaded (NPT) inlet and outlet connections

PART NO.	MOUNTING	INLET & OUTLET CONNECTIONS*	LOW PRESSURE OUTLET CONNECTION	DIMENSIONS (H X W X D)		WEIGHT		MAX. OPERATING PRESSURE	
				in	mm	lb	kg	psi	bar
54238	Pump	3/4" NPT Female	3/4" NPT Female	3.2 x 3.3 x 7.9	80 x 84 x 200	11	5	10,000-15,000	689-1034
52690	Base			12.8 x 8.0 x 11.3	325 x 203 x 287	28	12	10,000-15,000	689-1034
54432	Pump			3.2 x 3.3 x 7.9	80 x 84 x 200	11	5	6,000-11,000	344-758
53605	Base			12.8 x 8.0 x 11.3	325 x 203 x 287	28	12	6,000-11,000	344-758
57962	Pump			3.2 x 3.3 x 7.9	80 x 84 x 200	11	5	2,000-6,000	137-413
J55874	Base			12.8 x 8.0 x 11.3	325 x 203 x 287	28	12	2,000-6,000	137-413

*See details on all connection types in Section I.

BASE-MOUNTED
Part No. 52690 & 53605, J55874

PUMP-MOUNTED
Part No. 54238, 54432, 57962

REPLACEMENT CARTRIDGE

Part No. 52695, J55878, 53135

PART BREAKDOWN (BASE MOUNTED MODELS)

ITEM	PART NO.	DESCRIPTION
1	52700	Adjustment Knob
2	26919	O-Ring
3	52572	Body
4	50795	Locking Arm
5	25593	Capscrew
	50562	Gauge (0-10,000 psi scale)
6	25771	Gauge (0-20,000 psi scale)
	51126	Gauge (0-30,000 psi scale)
7	J55878	Cartridge, 2,000-6,000 psi
	53135	Cartridge, 6,000-11,000 psi
	52695	Cartridge, 10,000-15,000 psi
8	25657	O-Ring
9	52583	Outlet Adapter
10	25796	Hose Barb
11	25700	Capscrew
12	52486	Base

USE FOR MODELS: 52690, 53605, J55874

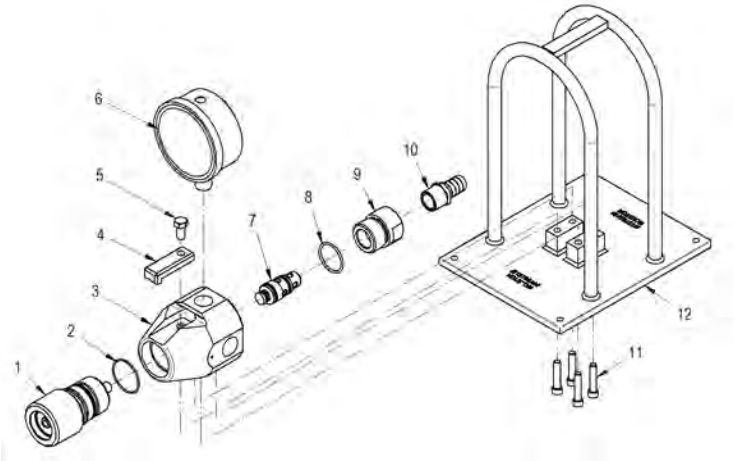

PART BREAKDOWN (PUMP MOUNTED MODELS)

ITEM	PART NO.	DESCRIPTION
1	52700	Adjuster
2	52572	Body
3	26065	Bushing
4	50795	Locking Arm
5	25593	Capscrew
6	26115	Plug
7	51702	Straight Fitting
8	J55878	Cartridge, 2,000-6,000 psi
	53135	Cartridge, 6,000-11,000 psi
	52695	Cartridge, 10,000-15,00 psi
9	25657	O-Ring
10	52583	Outlet Adapter
11	27989	Elbow Fitting
12	25796	Hose Barb
13	25807	Hose Clamp
14	25932	Hose
15	25807	Hose Clamp
16	25796	Hose Barb
17	27947	Tee

USE FOR MODELS: 54238, 54432, 57962

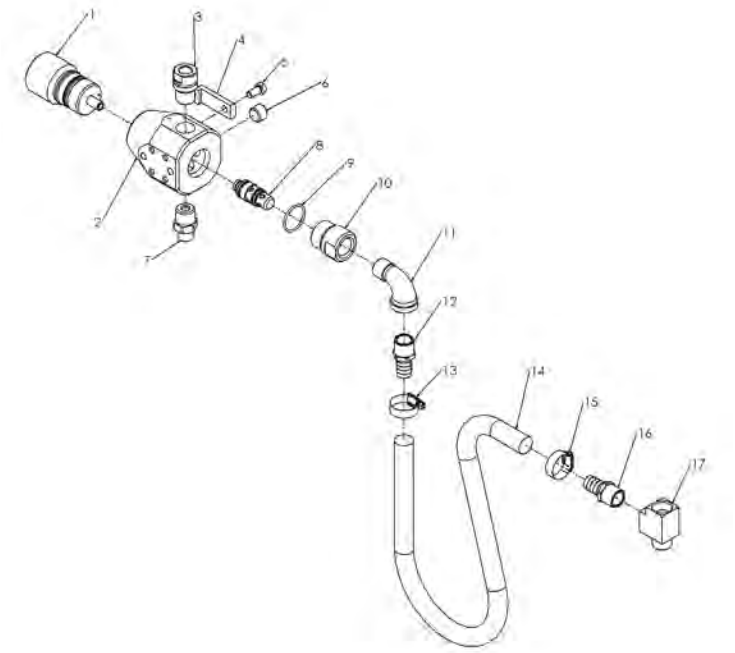

SHUT-IN REGULATOR VALVES

AIR-OPERATED

Regulator valves maintain a constant pressure when operating one or more shut-in style tools from a single bareshaft pump. The regulator automatically adjusts the excess flow to a lower pressure outlet to maintain the overall system constant pressure.

- Remote manifold mounting
- Pressure-bearing components stainless steel
- Six inlet ports available with various types of inlet and outlet connections. See page E-14 for HF adapter inlet options.

PART NO.	MOUNTING	INLET & OUTLET CONNECTIONS*	LOW PRESSURE OUTLET CONNECTION	DIMENSIONS (H X W X D)		WEIGHT		MAX. OPERATING PRESSURE	
				in	mm	lb	kg	psi	bar
63064	Pump	HF	1" NPT Female	3.2 x 3.3 x 7.9	80 x 84 x 200	11	5	8,000-15,000	550-1034

*See details on all connection types in Section I.

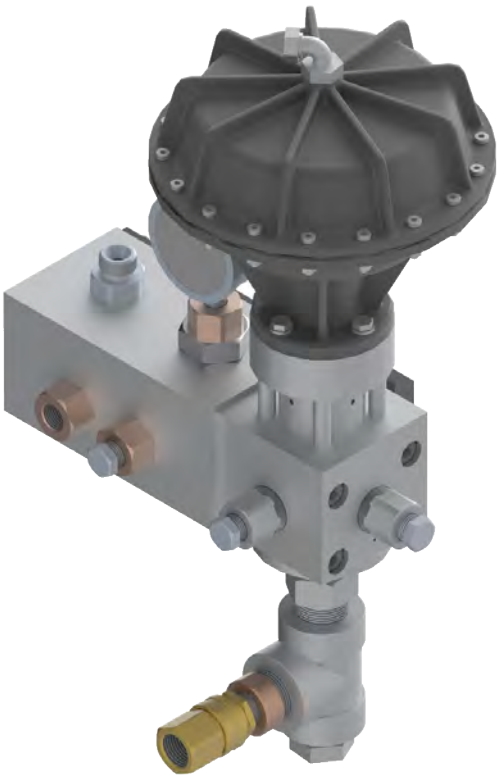

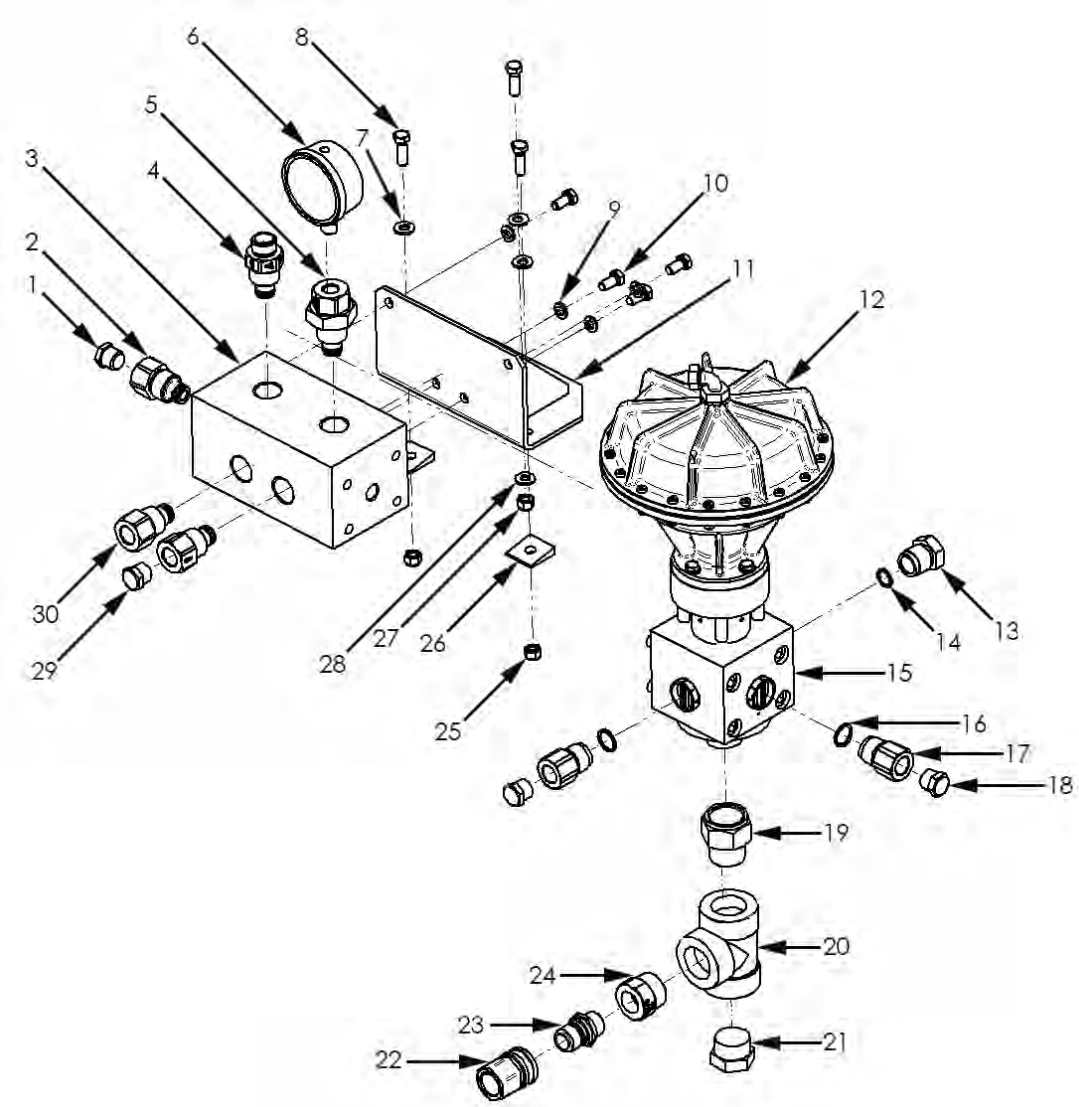

PART BREAKDOWN

ITEM	PART NO.	DESCRIPTION	ITEM	PART NO.	DESCRIPTION
1	26147	Plug	16	63081	Washer, Seal
2	63089	Adapter Assembly, 15K	17	63087	Adapter
3	62838	Manifold, Regulator, 15K	18	26147	Plug
4	60952	Adapter Assembly	19	63079	Adapter
5	60955	Adapter Assembly, Clockable	20	08282	Tee, 1-1/2"
6	51126	30K Pressure Gauge	21	71321	Plug
7	59149	Washer	22	63070	QD Coupler
8	26435	Capscrew	23	63069	QD Nipple
9	26558	Washer, Lock	24	28611	Reducing Bushing
10	26361	Capscrew	25	29904	Nylok Nut
11	63076-008	Bracket, Remote Manifold	26	26556	Washer
12	62966	Regulator Valve, Pneumatic	27	29904	Nylok Nut
13	62835	Plug	28	59149	Washer
14	62903	Washer	29	26147	Plug
15	62838	Manifold, Regulator, 15K	30	63089	Adapter Assembly, 15K

REGULATOR VALVE

LONG HANDLE (DUMP STYLE)

Required for use with shut-in systems on plunger pumps, the regulator valve maintains constant system pressure when operating one or more shut-in guns from a single pump. When a gun is disengaged, the regulator "senses" the reduction in flow downstream and shifts open just enough to divert water to a low pressure for other operators without over-pressurizing the system.

- Two minute field-repairable cartridge design for minimal downtime
- Hand Adjustment—no wrench needed

PART NO.	STYLE	CONNECTION TYPE	MAX. OPERATING PRESSURE		LENGTH	
			psi	bar	in	mm
55515	Long Handle	3/4" NPT Female	15,000	1034	12.0	304.8

REPLACEMENT CARTRIDGE

Regulator valve utilizes a cartridge, to completely rebuild the valve in about 30 seconds.
Part No. 55530

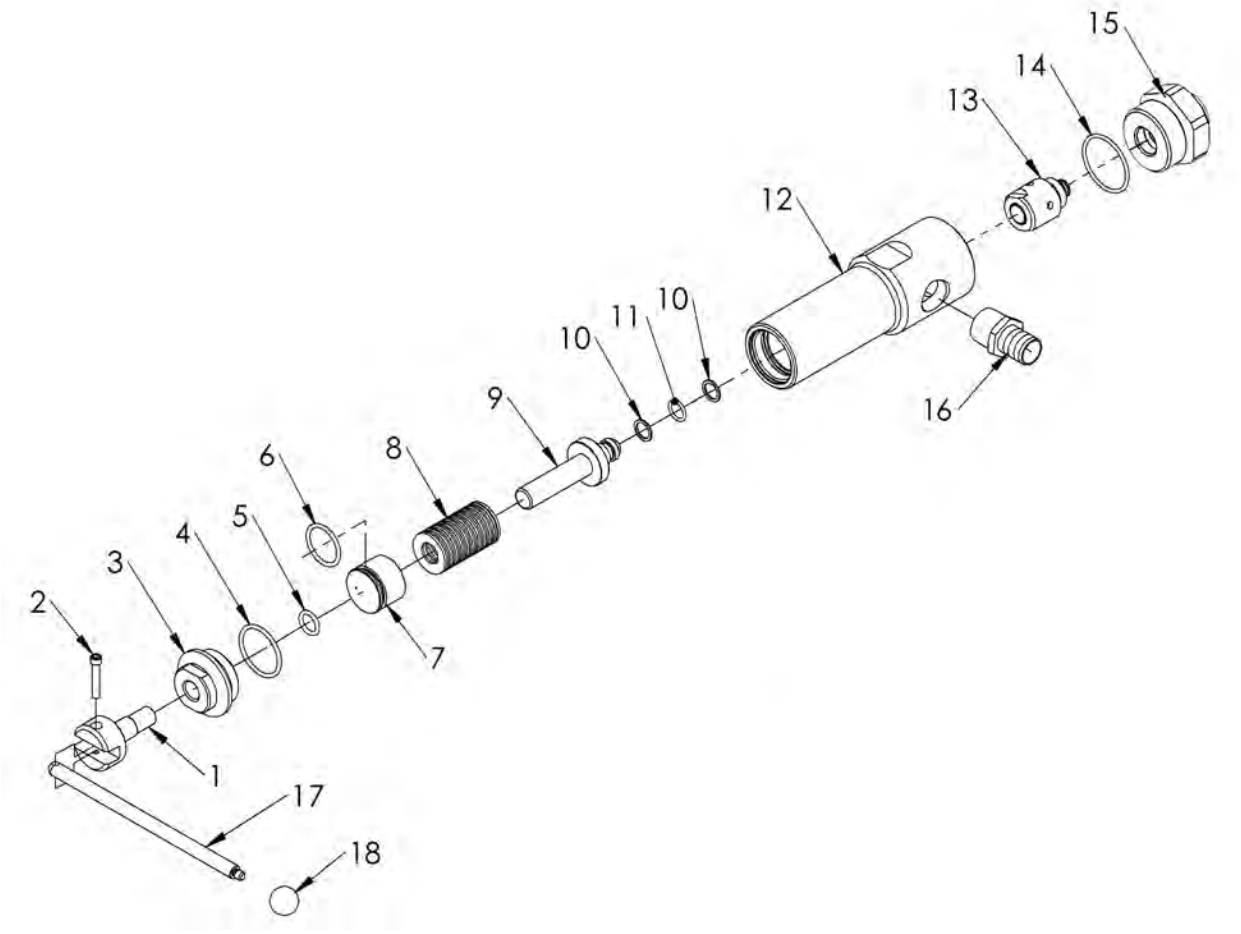

PART BREAKDOWN

ITEM	PART NO.	DESCRIPTION	ITEM	PART NO.	DESCRIPTION
1	55524	Adjuster	10	70125	Backup Ring
2	27680	Capscrew	11	25740	O-Ring
3	55523	End Cap	12	55521	Body
4	25165	O-Ring	13	55530	Cartridge
5	25212	O-Ring	14	26416	O-Ring
6	25125	O-Ring	15	55516	Base
7	55522	Pusher, Spring	16	29722	Hose Barb
8	70127	Spring Disc*	17	55531	Handle
9	55519	Plunger	18	70130	Knob, Handle

*Sold individually

22K AIR-OPERATED REGULATOR

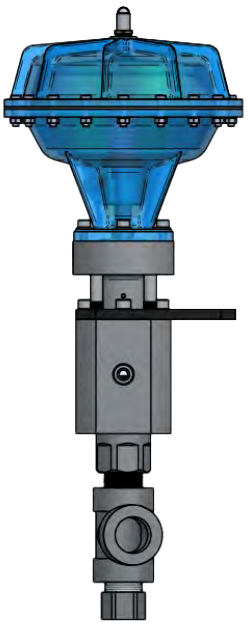

The 22K Air-Operated Regulator maintains constant system pressure when operating one or more guns or tools in a shut-in system.

After supplying it with a source of regulated low-pressure air, it will automatically adjust its bypass flow to maintain a constant system pressure. This system pressure will be maintained even through changes in the operation of the guns or tools, nozzle wear, or changes in engine speed. Once supplied with an initial charge of air, the regulator does not consume any air during operation. Because of this, a very small compressor can be used.

Features of the 22K Air-Operated Regulator include:

- High-strength ceramic valve components for long life and low maintenance.
- High flow capacity (up to 60 gpm).
- Outstanding control properties.
- Can be retrofitted to any unit.

PART NO.	STYLE	CONNECTION TYPE	MAX. OPERATING PRESSURE		LENGTH	
			psi	bar	in	mm
67158	Air-Operated	3/4" MP AE Female	22,000	1517	30.8	782

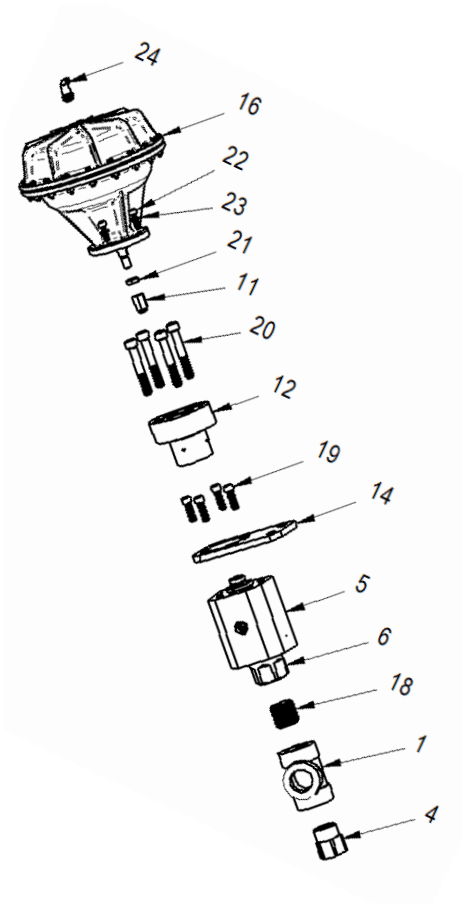

PART BREAKDOWN

ITEM	PART NO.	DESCRIPTION	ITEM	PART NO.	DESCRIPTION
1	08282	1-1/2" Tee	13*	67143	Plunger
2*	25165	O-Ring	14	67148-008	Mounting Bracket
3*	25638	O-Ring	15*	67328	Disc Spring
4	62413	Plug	16	67329	Diaphragm
5	64149	Valve Body	17*	67681	Cartridge Seat
6	64150	Outlet Adapter	18*	67844	Nipple
7*	64153	Guide Bushing	19	68158	Capscrew
8*	64154	Seal	20	68159	Capscrew, M16
9*	64158	Seal Support Ring	21	68160	Nut
10*	65857	Support Disc	22	68161	Capscrew, M10
11	66957	Pusher Tip	23	68162	Washer
12	66958	Spacer	24	68166	Adapter

*Not shown.

ELECTRONIC HYDRO-THROTTLE

THROTTLE CONTROLS FOR DUMP SYSTEMS

The Jetstream hydro-throttle enables the operator to reduce the engine to idle speed and relieve the system of high pressure when the dump gun trigger (or foot pedal) is released—saving water and fuel, while reducing wear on the engine and pump.

- Electronic hydro-throttle assembly is standard on current models and includes the actuator assembly, cartridge, and electrical plug to connect to the engine control panel
- Replaceable cartridge for fast field service or conversion to another pressure range

TYPE	PART NO.	LENGTH (LESS CORD)		MANIFOLD CONNECTION	DIAMETER		WEIGHT		MAX. OPERATING PRESSURE	
		in	mm		in	mm	lb	kg	psi	bar
4200	J56371	7.2	182	3/4" NPT	1.75	44.4	1.6	.72	15,000	1034
3000	57902			1/2" NPT						

REPLACEMENT CARTRIDGE

Hydro-Throttle valve utilizes a cartridge, shown above, to completely rebuild the dump valve in about 30 seconds.
Part No. 51899

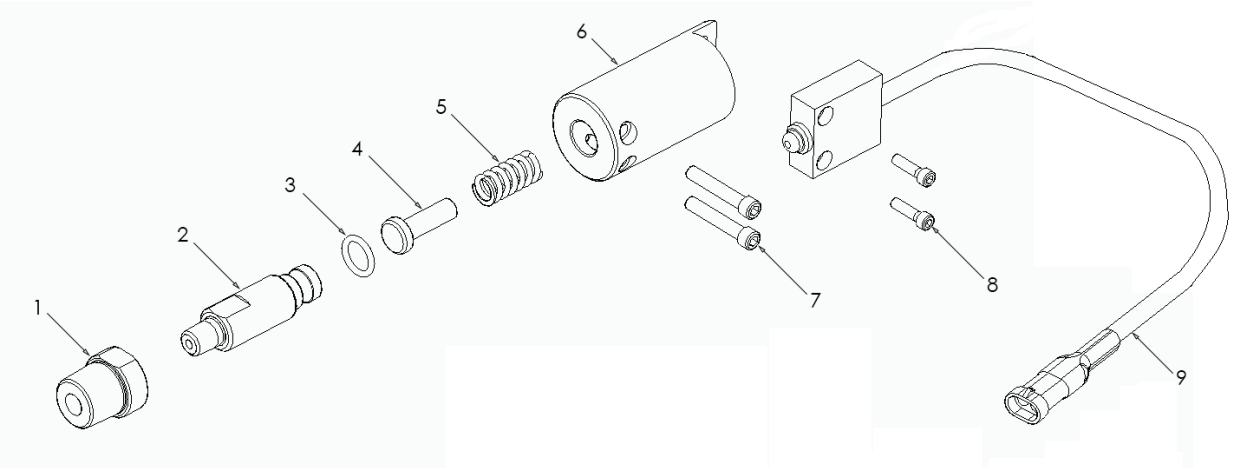

PART BREAKDOWN

ITEM	PART NO.	DESCRIPTION	ITEM	PART NO.	DESCRIPTION
1	26069	Reducer Bushing, 4200	6	53443	Body
	25904	Reducer Bushing, 3000	7	27680	Capscrew
2	51899	Cartridge	8	27716	Capscrew
3	26426	O-Ring	9	57970	Switch Assy (after 9/2008)
4	53444	Plunger		56551	Switch Assy (2007 - 9/2008)
5	25279	Spring		53446	Switch Assy (before 2007)

MECHANICAL HYDRO-THROTTLE

THROTTLE CONTROLS FOR DUMP SYSTEMS

The Jetstream hydro-throttle enables the operator to reduce the engine to idle speed and relieve the system of high pressure when the dump gun trigger (or foot pedal) is released—saving water and fuel, while reducing wear on the engine and pump.

- Mechanical hydro-throttle parts can be purchased and include the control unit, cartridge and control cable
- Replaceable cartridge for fast field service or conversion to another pressure range
- For use on Tier I Mechanical engines only
- Requires high pressure hose connected to fluid end

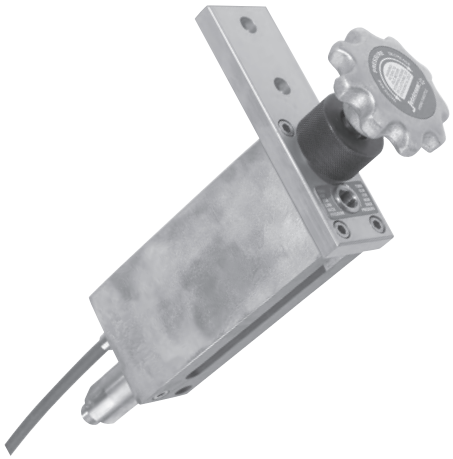

PART NO.	CONTROL CABLE LENGTH		HOSE CONNECTION THREAD	CONTROL UNIT SIZE (L X W X H)		WEIGHT		MAX. OPERATING PRESSURE	
	ft	m		in	mm	lb	kg	psi	bar
51900	2	0.6	1/4" NPT Male	11.7 x 1.75 x 5.6	297 x 44.5 x 142	4	1.8	15,000	1034
51900A	5	1.5							

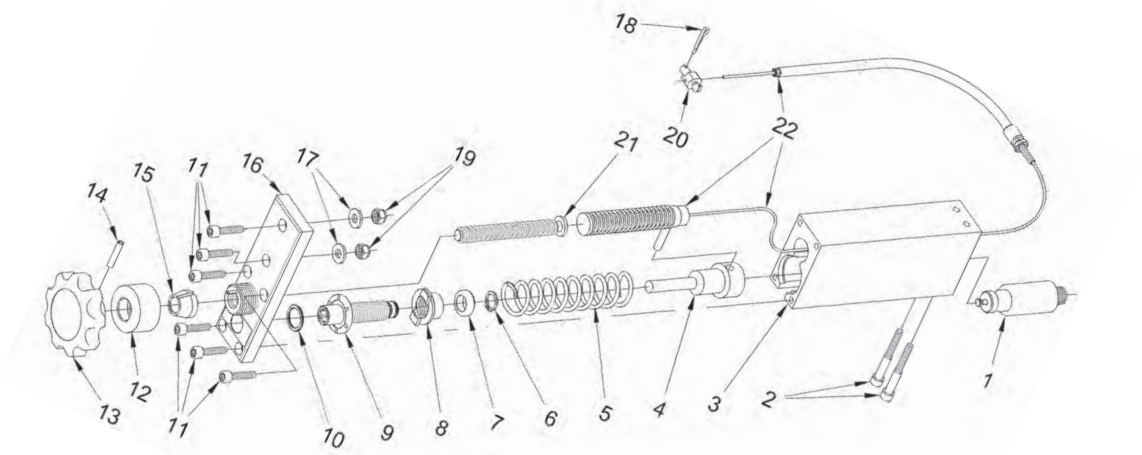

PART BREAKDOWN

ITEM	PART NO.	DESCRIPTION	ITEM	PART NO.	DESCRIPTION
1	51899	Cartridge	12	51887	Friction Adjust. Nut
2-21	52894	Throttle Control Unit	13	51879	Hand Knob
2	26690	Capscrew	14	26688	Pin
3	51877	Body	15	51888	Friction Ring
4	54293	Spring Retainer	16	51908	Face Plate
5	26682	Return Spring	17	25247	Washer
6	28274	Retaining Spring	18	26468	Cotter Pin
7	54272	Adjuster Stop Ring	19	25314	Nut
8	54269	Pressure Adjust. Nut	20	26728	Pivot Terminal
9	51885	Pressure Adjust. Screw	21	54268	Adjustment Screw
10	54271	Thrust Washer	22	51903	2' (0.6m) Ctrl Cable
11	26689	Capscrew		51903A	5' (1.5m) Ctrl Cable

REPLACEMENT CARTRIDGE

Hydro-Throttle valve utilizes a cartridge, shown above, to completely rebuild the dump valve in about 30 seconds.
Part No. 51899

REPLACEMENT PARTS

51903 Control Cable, 2 ft. solid wire

51903A Control Cable, 5 ft. braided wire

53371 6' (1.8m) Hydro-Throttle Hose, 1/2" NPT Male x 1/4" NPT Female

MULTI-GUN VALVE (MGV)

The MGV (Multi-Gun Valve) allows two dump style waterblast guns to be operated independently when connected to one waterblast pump. The MGV will divide the pump's total flow between the guns and will maintain system pressure when either or both guns are dumping.

- Setup using two hand adjustment dials is fast and simple
- Utilizes two valve cartridges that can be easily replaced to completely repair the valve in the field in only three minutes
- All pressure-bearing components are stainless steel
- Zinc-plated base for corrosion resistance
- Pipe threaded (NPT) inlet and outlet connections
- Additional Multi-Gun Valves can be added to a system to further increase the number of tools in operation by a single waterblast unit

PART NO.	INLET & THROUGH CONNECTIONS*	GUN CONNECTION*	MAXIMUM FLOW		DIMENSIONS (H X W X D)		WEIGHT		MAX. OPERATING PRESSURE	
			gpm	lpm	in	mm	lb	kg	psi	bar
51785	3/4" NPT Female	1/2" NPT Female	35	132	4.3 x 8.0 x 10.8	109 x 203 x 275	29	13	15,000	1034

*See details on all connection types in Section I. Inlet and Outlet (Gauge) connections can be reversed.

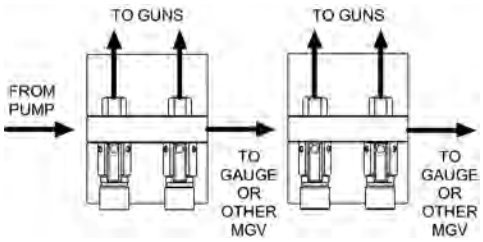

MULTIPLE MGV CONFIGURATIONS

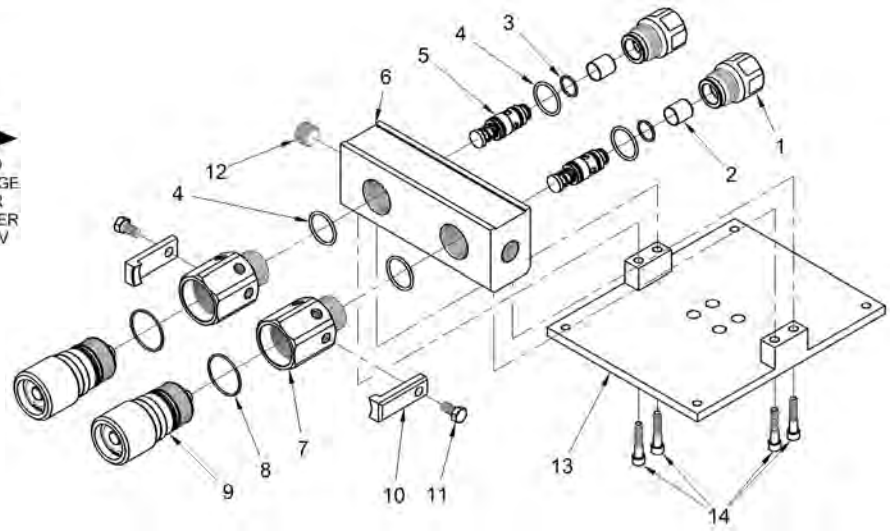

PART BREAKDOWN

ITEM	PART NO.	DESCRIPTION	ITEM	PART NO.	DESCRIPTION
1	59047	Outlet Adapter	8	25603	O-Ring
2	52201	Diffuser	9	50900	Adjuster
3	26782	O-Ring	10	50795	Locking Arm
4	26509	O-Ring	11	25593	Capscrew
5	50234	Cartridge	12	26164	3/4" NPT Plug
6	51767	Manifold	13	50811	Base
7	51769	Adjuster Adapter	14	25700	Capscrew

REPLACEMENT CARTRIDGE

Part No. 50234

SEVERE SERVICE RELIEF VALVE

For use as a primary relief device to protect waterblast systems and operators from dangerous overpressurization, the Severe Service Relief Valve opens to safely bypass some of the system flow in circumstances where the operating pressure exceeds the factory set opening pressure of the valve.

- Designed for rigorous service and low maintenance.
- Valve constructed with carbide ball and hardened stainless steel seat for long service life.
- Precise machining and cartridge design of ball-seat valve assembly and spring assembly allows quick and simple field repair without disturbing the valve pressure setting.
- Shipped from the factory preset and tested at customer specified opening (relief) pressure. Pressure cannot accurately be set lower than 4,000 PSI.
- Factory set opening pressure is stamped into anti-tamper ring which is installed to prevent set pressure from being changed without evidence

PART NO.	CONNECTION TYPE*	OVERALL LENGTH		DIAMETER		RELIEF PRESSURE RANGE (FACTORY SET)**		MAX. WORKING PRESSURE	
		in	mm	in	mm	psi	bar	psi	bar
51470A	1/2" NPT Male	6.5	165	1.94	49.3	4,000 - 6,000	276 - 415	5,000	345
51470B	1/2" NPT Male					6,000 - 12,000	415 - 825	10,000	689
51470C	1/2" NPT Male					12,000 - 18,000	825 - 1240	15,000	1034
51945A	3/4" NPT Male	6.7	170	1.94	49.3	4,000 - 6,000	276 - 415	5,000	345
51945B	3/4" NPT Male					6,000 - 12,000	415 - 825	10,000	689
51945C	3/4" NPT Male					12,000 - 18,000	825 - 1240	15,000	1034
51460A	1" NPT Male	7.9	200	2.20	55.9	4,000 - 6,000	276 - 415	5,000	345
51460B	1" NPT Male					6,000 - 12,000	415 - 825	10,000	689

*See details on all connection types in Section I.
**Valve pressure cannot accurately be set lower than 4,000 psi.

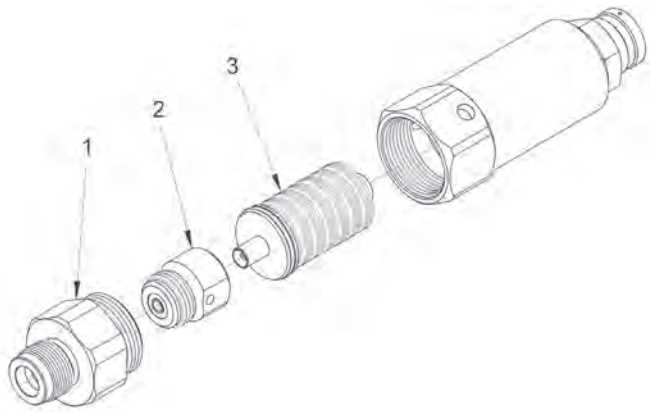

PART BREAKDOWN

ITEM	PART NO.	DESCRIPTION
1	51452	Base, 1/2" NPT Male (51470)
	51822	Base, 3/4" NPT Male (51945)
	51441	Base, 1" NPT Male (51460)
2	51500	Ball-Seat Cartridge Assy (51470, 51945)
	51486	Ball-Seat Cartridge Assy (51460)
3	51477	Spring Cartridge Assy (51470, 51945)
	51468	Spring Cartridge Assy (51460)

MULTI-UNIT MANIFOLDS (MUM)

15,000 PSI HIGH FLOW
Part No. 55330

15,000 PSI
Part No. 52840

- Combine flow of two waterblast units
- Two sizes available
- Built-in bypass valve and pressure gauge for centralized, remote pressure control
- All pressure-bearing components are stainless steel
- Zinc-plated base for corrosion resistance
- Pipe threaded (NPT) inlet and outlet connections

PART NO.	INLET CONNECTIONS*	OUTLET CONNECTIONS*	MAXIMUM FLOW		DIMENSIONS (H X W X D)		WEIGHT		MAX. OPERATING PRESSURE	
			gpm	lpm	in	mm	lb	kg	psi	bar
55330	1" NPT Female	1" NPT Female	200	757	14 x 8 x 10	355 x 203.2 x 254	30	13.6	15,000	1034
52840	1/2" NPT Female	3/4" NPT Female	100	378	4.3 x 8 x 10.8	109 x 203.2 x 274.3	27	12.2		

*See details on all connection types in Section I.

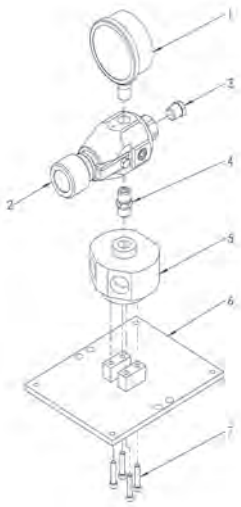

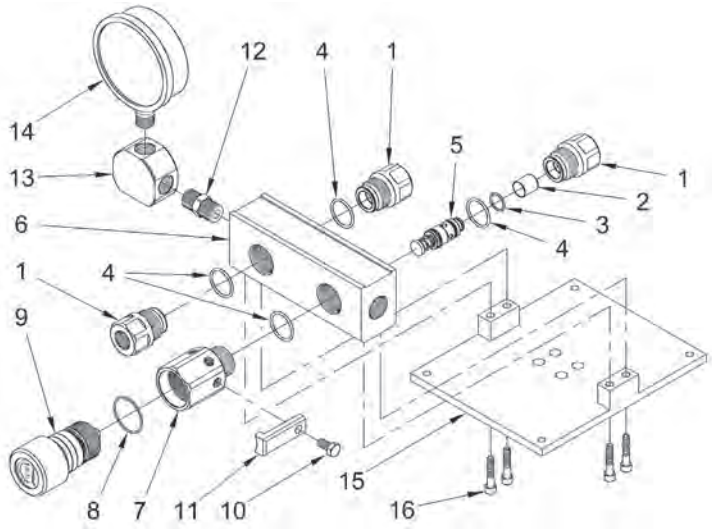

15,000 PSI HIGH FLOW PART BREAKDOWN (P/N 55330)

ITEM	PART NO.	DESCRIPTION
1	51126	Pressure Gage
2	53920	Bypass Valve
3	25174	Plug
4	50488	Hex Nipple
5	55297	Y-Fitting, 1"
6	55304	Base
7	25700	Capscrew

15,000 PSI PART BREAKDOWN (P/N 52840)

ITEM	PART NO.	DESCRIPTION	ITEM	PART NO.	DESCRIPTION
1	54077	Outlet Adapter	9	52144	Adjuster
2	52201	Diffuser	10	25593	Capscrew
3	26782	O-Ring	11	50795	Locking Arm
4	26509	O-Ring	12	50496	Nipple
5	50234	Cartridge	13	50300	Elbow
6	51767	Manifold	14	51126	Gauge (0-30,000 psi)
7	51769	Adjuster Adapter	15	50811	Base
8	25603	O-Ring	16	25700	Capscrew

HYDROSTATIC TEST VALVE (HTV)

The Jetstream Hydrostatic Test Valve (HTV) is used for the pressure testing of pipes or other vessels. This valve allows one operator to control the filling, pressurizing and pressure bleeding from a central location. Included in this valve is the hand lever, which eliminates the need to “feather” the clutch on the Waterblasting unit.

- wo-minute field replaceable cartridge design for minimal downtime
- Hand controls for high pressure filling and bleeding, without the use of a wrench
- Stainless steel pressure bearing components
- Internal ball check valve
- Adapts to various data acquisition apparatuses

PART NO.*	INLET CONNECTIONS*	OUTLET (TEST DEVICE) CONNECTION**	OUTLET (CHART RECORDER) CONNECTION**	OUTLET (BLEED BACK TANK) CONNECTION**	WEIGHT		MAX. OPERATING PRESSURE	
					lb	kg	psi	bar
61376-XX	1/2" NPT Female	1/2” NPT Female	9/16” MP Female	9/16” MP Female	100	45.3	20,000	1379

* The HTV is available in several paint colors, which are specified using a two digit code in the part number. 61376-01 is yellow, 61376-02 is blue, and 61376-08 is black.
**See details on all connection types in Section I.

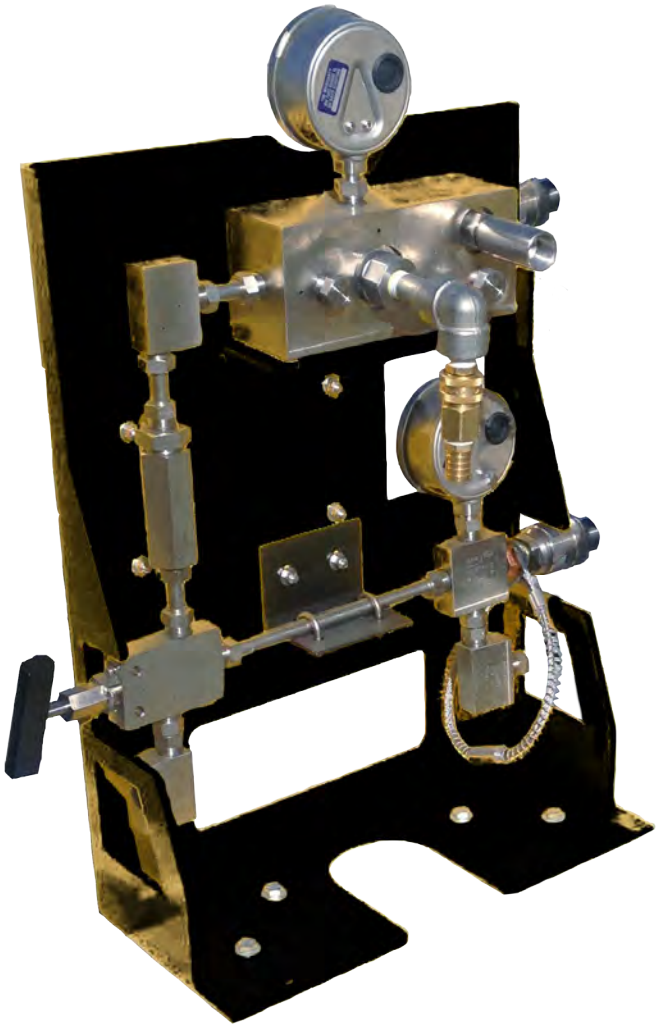

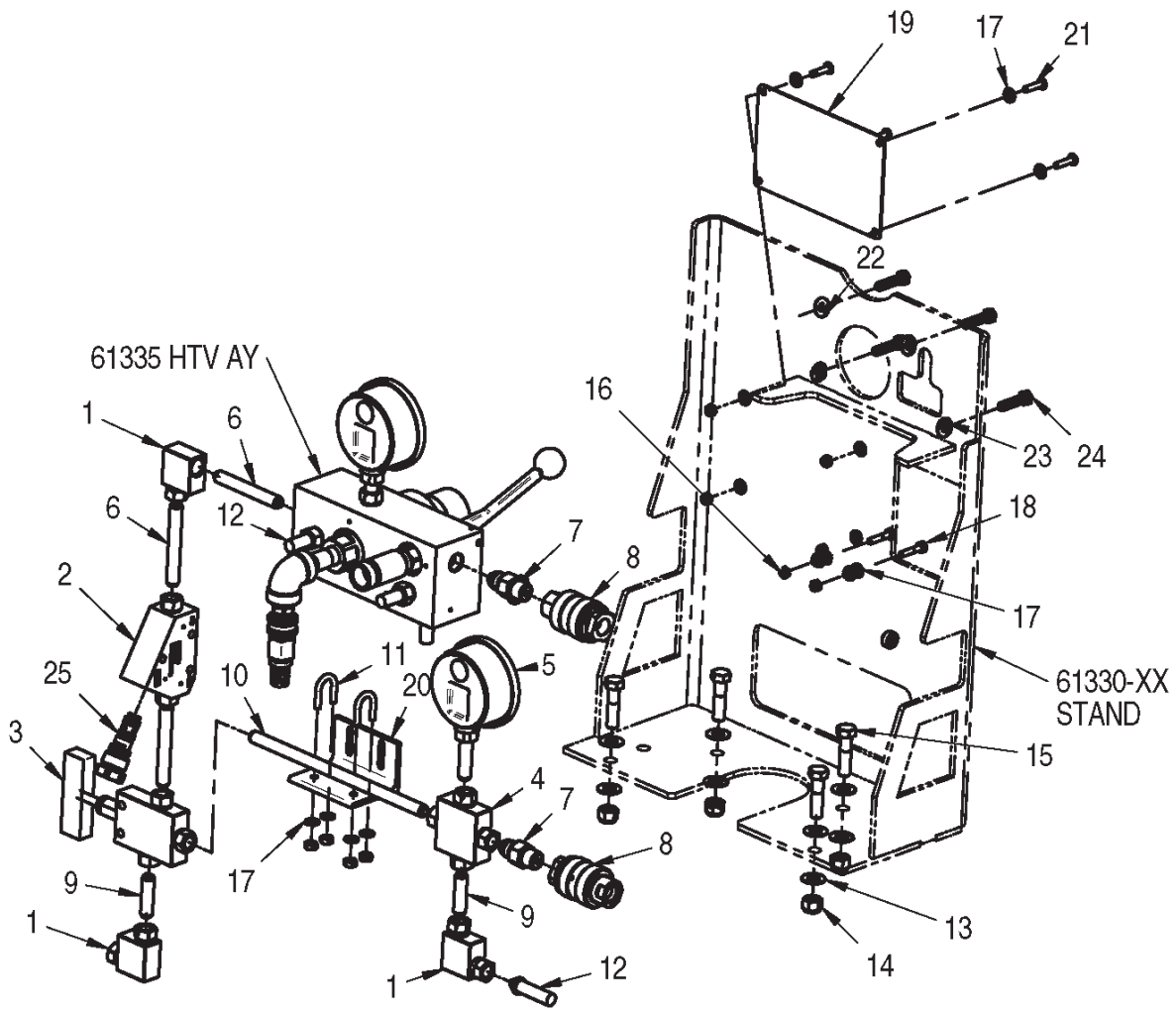

PART BREAKDOWN

ITEM	PART NO.	DESCRIPTION	ITEM	PART NO.	DESCRIPTION
1	28184	Elbow	14	29904	Nut
2	61993	Check Valve	15	27122	Capscrew
3	28025	Needle Valve, 3-Way	16	25314	Nut
4	27969	Cross, 4-Way	17	25247	Washer
5	25037	Pressure Gauge	18	26565	Capscrew
6	27968-04	Nipple 4"	19	61331	Plate, Instruction
7	27971	Adapter	20	61686-08	Bracket
8	50989	Coupling, Quick Disconnect	21	26707	Capscrew
9	27968-03	Nipple, 3"	22	25251	Flat, Washer
10	27968-11	Nipple, 11"	23	25249	Lock, Washer
11	61687	U-Bolt	24	61378	Capscrew
12	27973	Plug	25	60765	Check Valve Cartridge
13	26798	Washer			

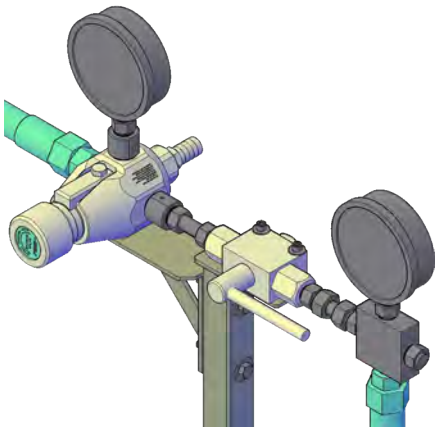

HYDROSTATIC TEST VALVE (HTV)

FOR USE WITH FOOT VALVE

The Jetstream Hydrostatic Test Valve (HTV) is used for the pressure testing of pipes or other vessels. This valve allows one operator to easily control test pressure without “feathering” the clutch on the Waterblasting unit.

- Up to 20,000 psi
- Precise hand-adjustable pressure setting
- Severe-duty ball valve eliminates need to manually hold pressure during test and requires only 1/4 turn to depressurize
- Used with foot valve for safe and absolute control of the system and vessel pressures
- Separate gauges to monitor system and test pressure
- Optional port for chart recorder
- Mounting bracket for easy installation

PART NO.	INLET CONNECTION*	OUTLET (TEST DEVICE) CONNECTION*	OUTLET (CHART RECORDER) CONNECTION*	WEIGHT		MAX. OPERATING PRESSURE	
				lb	kg	psi	bar
57169	20K Port	9/16" MP Female	9/16" MP Female	50	22.7	20,000	1,379

*See details on all connection types in Section I.

PART BREAKDOWN

ITEM	PART NO.	DESCRIPTION
1	25037	Pressure Gauge
2	27969	Cross, 9/16" MP
3	54592	Bypass Valve
4	71706	Ball Valve
5	71716	Bracket, Hydrostatic Test
6	71717	Bracket,Bypass Mounting

Note: Foot valve, hoses, and adapters sold separately.

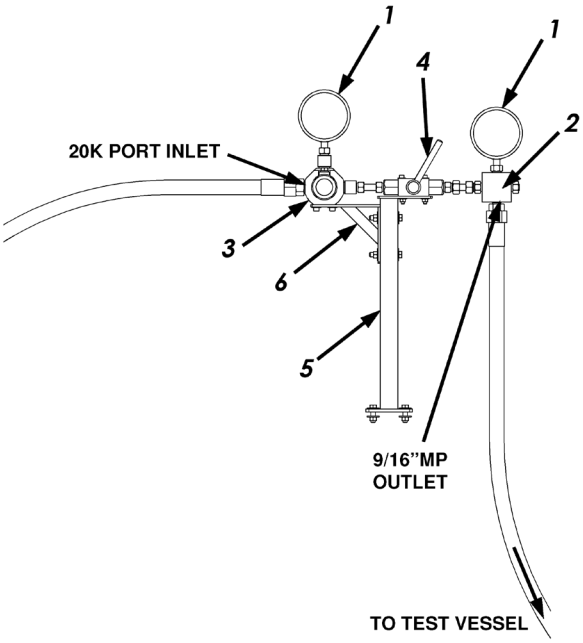

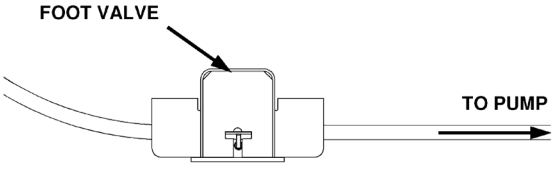

20K CHECK VALVE

The 20K Check Valve was designed to protect components by ensuring flow in one direction only. This tool is ideal for the hydrostatic testing market; however, can be utilized in many other applications.

- 30 second field repairable cartridge design for minimal downtime
- Prevents removal of high pressure connections if valve maintenance is required
- Ball-style with low crack pressure

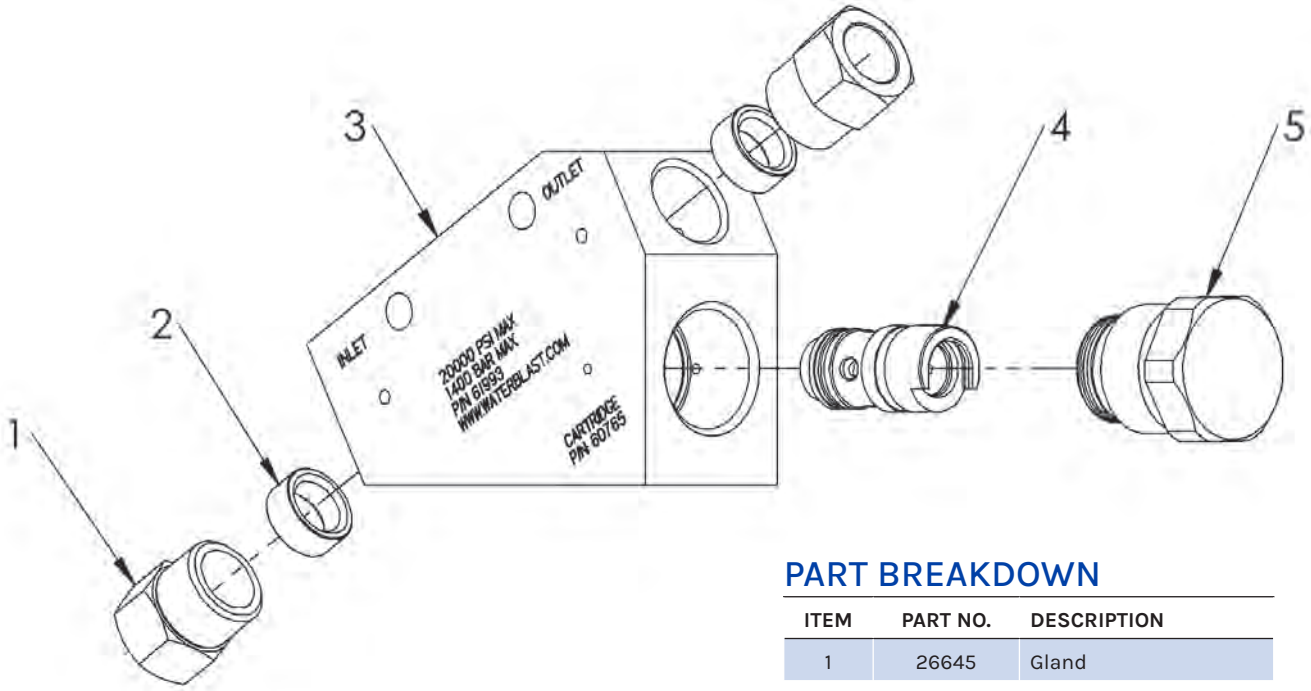

PART BREAKDOWN

ITEM	PART NO.	DESCRIPTION
1	26645	Gland
2	26635	Collar
3	61904	Inline Valve
4	60765	Check Valve Cartridge
5	60766	Plug Assy

REPLACEMENT CARTRIDGE

The check valve utilizes a cartridge, to completely rebuild in about 30 seconds.
Part No. 60765

NOZZLE SHUT-OFF VALVE (NSOV)

The Nozzle Shut-Off Valve (NSOV) is designed for use with dump style foot guns. The Nozzle Shut Off Valve completely stops all water flow to the cleaning nozzle in a waterblast operation while the foot valve is in its dump mode.

- Allows the operator to freely move the nozzle without impairment of vision caused by sprayback (shown below)
- Opens fully for unimpeded flow to the nozzle when blasting
- Mounts between lance and foot gun
- All pressure-bearing components precision machined stainless steel

PART NO.	INLET CONNECTION*	OUTLET CONNECTION*	DIMENSIONS (H X W X D)		WEIGHT		MAX. OPERATING PRESSURE	
			in	mm	lb	kg	psi	bar
63144	1/2" NPT Male	1/2" NPT Female	5.15 x 2.25	130.81 x 57.15	3	1.4	15,000	1034

*See details on all connection types in Section I.

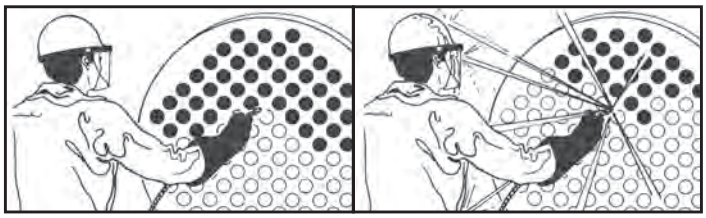

With NSOV installed **Without NSOV installed**

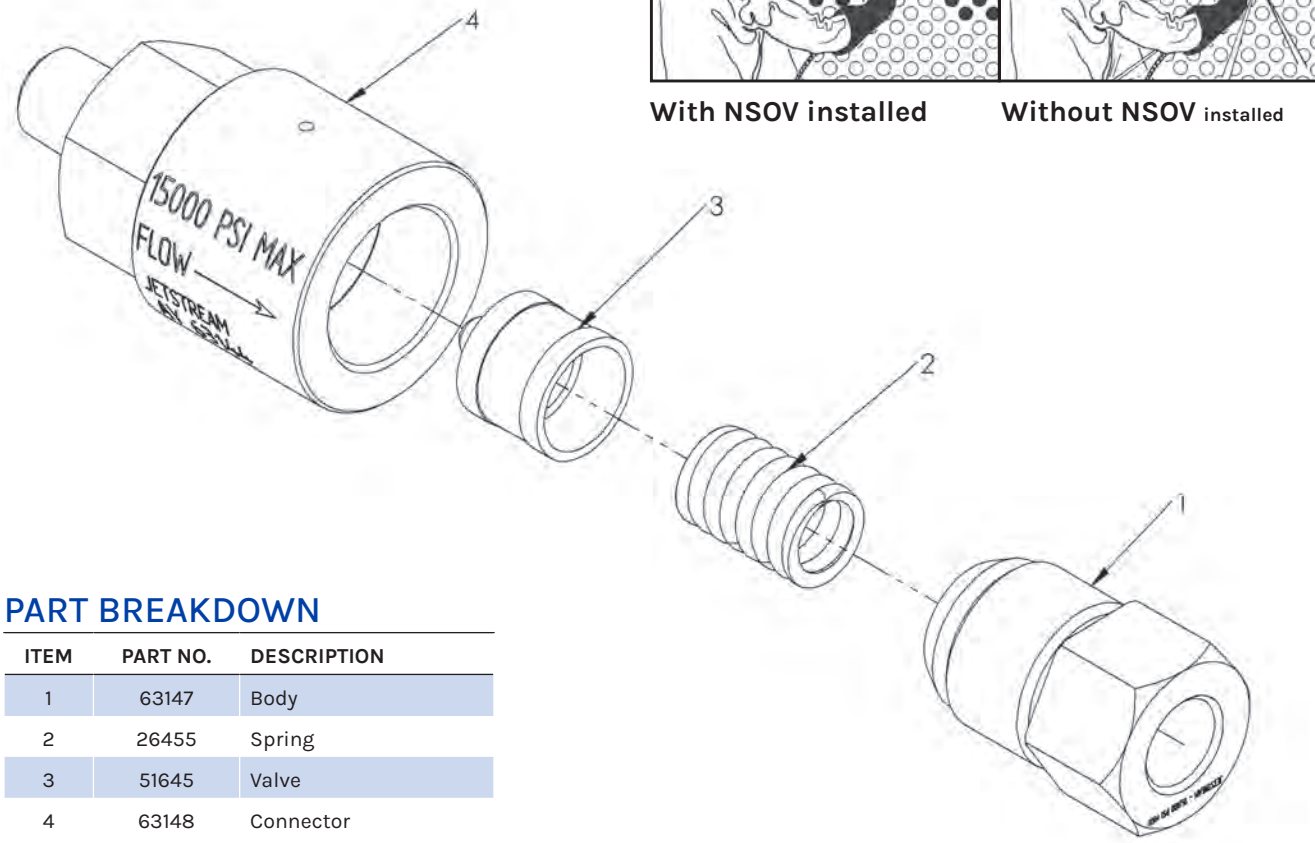

PART BREAKDOWN

ITEM	PART NO.	DESCRIPTION
1	63147	Body
2	26455	Spring
3	51645	Valve
4	63148	Connector

STANDARD FILTERS

Available for a range of flows to meet all needs, Jetstream filters provide the necessary protection to any waterblast system.

GUARDIAN SYSTEM
PART NO. 67776

PART NO. 70968

PART NO. 61607

PART NO. 60740

PART NO.	INLET/OUTLET DRAIN CONNECTIONS	MAX FLOW RATE		DIMENSIONS				WEIGHT		MAX. OPERATING PRESSURE	
				DIAMETER		HEIGHT					
		gpm	lpm	in	mm	in	mm	lb	kg	psi	bar
67776	1-1/2" / 3" / 2" NPT	-	-	18 5/16" deep x 47 5/8" wide x 50" tall				185	83.9	100	6.8
70968	2" / 2-3/4" NPT	200	750	8.63	219	41.19	1046.23	40	18	150	10
61607	3/4" / 1-1/2" NPT	40	150	4.0	102	20	510	7.5	3.4	150	10
60740*	2" NPT	200	750	8.63	219	47.18	1198.63	65	29.4	150	10

*For use with the 6000 Series units.

FILTER BAGS

FILTER STYLE	BAG DIAMETER		BAG LENGTH		NOMINAL FILTRATION BAGS (MICRON)			
	in	mm	in	mm	5 micron	10 micron**	25 micron	50 micron
67776	7	180	42	1070	71254	J56204**	J70917	-
70968	7	180	32	810	27688	26765**	26766	27497
61607	4	100	14	360	28806	26916**	25117	25866
60740*	7	180	32	810	-	62652	-	-

*For use with the 6000 Series units. **RECOMMENDED MICRON SIZE.

RELATED ITEMS

58414 Retrofit Float Assembly for non-Guardian Water Tanks

28519 Low Water Level Switch

28480MOD Float Valve Modified (plastic floats)

57888 Float Assembly - Guardian Tank

GUARDIAN TANK FILL VALVE ASSEMBLY

The new durable design for the fill valve assembly is constructed of stainless steel to withstand the rigor of transport. This valve assembly is used on all Jetstream units and is built to supply water for varying pressures. **Part No. 57858.**

An alternative fill valve assembly to fit non-Guardian tanks (**PN 58414**), is available with a 1-1/2" connection.

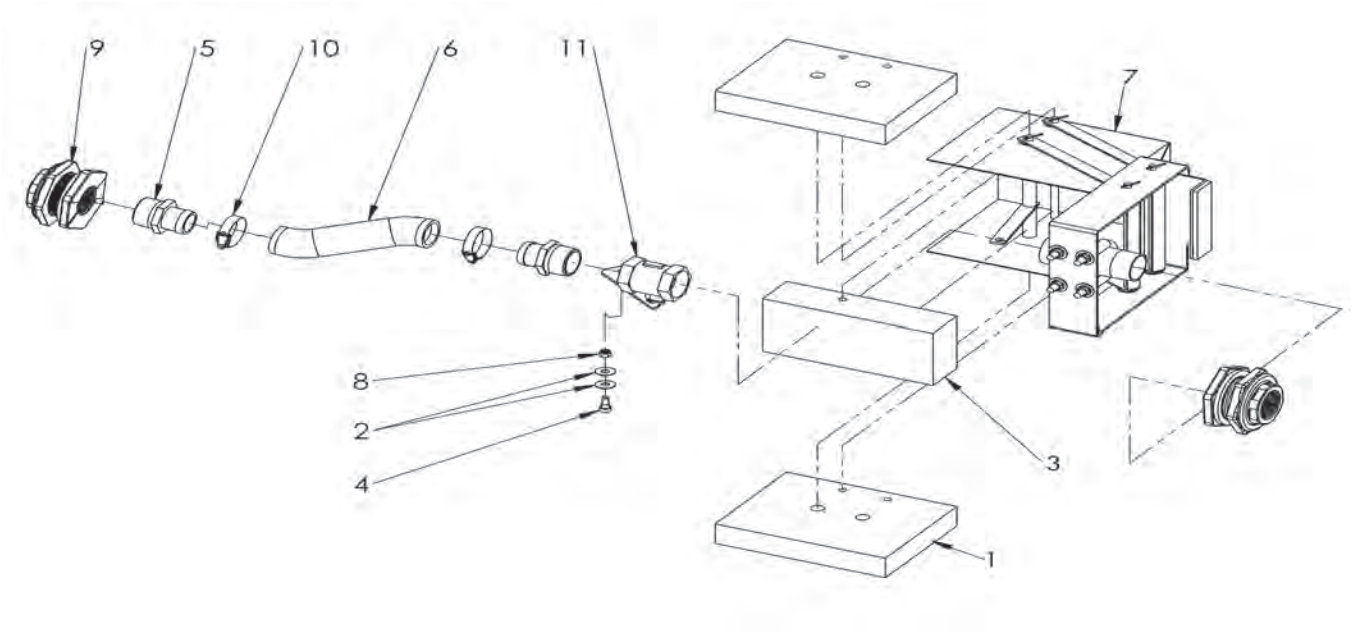

PART BREAKDOWN

ITEM	PART NO.	DESCRIPTION	ITEM	PART NO.	DESCRIPTION
1	57853	Float Segment	7	58305	Frame Ay, Fill Valve
2	71202	Washer	8	27698	Nut
3	58044	Float Segment	9	29374	Fitting, Bulkhead
4	57856	Screw, Shoulder	10	25221	Clamp, Hose
5	58002	Nipple, King	11	58314	Valve Ay, Modified
6	58000	Hose			

DESSICANT BREATHER

The dessicant breather filters out small particulates and removes moisture from the incoming air to ensure reliable and effective operation of the pump. Reduces downtime and costly repairs by minimizing abrasive wear, rust or corrosion. 1" NPT female connection.
Part No. 71671

PRESSURE GAUGES

- Bottom mount
- 4" high visibility face with laminated safety glass dial cover
- Accurate within +/-0.5% of full scale range
- Stainless steel case, fitting and internals
- Heavy-duty movement
- Glycerin-filled for protection against vibration and pulsation
- Restrictor screw provides maximum protection against pulsation
- Blow-out pressure relief plug for maximum safety
- Pointer zero adjustment

Part No. 25771

Part No. 51126

Part No. 29818

PART NO.	DIAL SIZE		MOUNTING STYLE	CONNECTION TYPE*	UNITS	SCALE	GRADUATIONS	MAX. OPERATING PRESSURE	
	in	mm						psi	bar
25771	4	100	Bottom	1/2" NPT Male	psi	0 – 20,000 psi	200 psi	10,000	689
51126**	4	100	Bottom	1/2" NPT Male	psi	0 – 30,000 psi	200 psi	15,000	1034
55416***	4	100	Bottom	1/2" NPT Male	psi/bar	0 – 30,000 psi 0 – 2000 bar	500 psi 20 psi	15,000	1034
29818	4	100	Bottom	9/16" HP Male	psi/bar	0 – 30,000 psi 0 – 2000 bar	500 psi 20 psi	15,000	1034

*See details on all connection types in Section I.
**Identical part number 61626 is certified and comes with a certificate of compliance.
***Includes adapter, gland nut and collar to adapt 9/16" HP tube nipple.

GAUGE EXTENSION

- Raises height of gauge for unobstructed reading
- 1/2" NPT Male x 1/2" NPT Female
- 4-1/2" (114 mm) lg.
- Stainless steel
- Copper-plated for galling resistance

Part No. 55176

GAUGE ADAPTER

- Connects gauge (part no. 29818) to 1/2" NPT Female port
- 1/2" NPT Male x 9/16" MP female
- Small I.D. for proper seating of 9/16" HP tube nipple
- 9/16" MP gland nut and collar sold separately
- Stainless steel
- Copper-plated for galling resistance

Part No. 55402

RUPTURE DISC HOLDERS

For protection from dangerous over-pressurization, rupture discs function in a waterblast system analagous to the function of fuses in an electrical circuit. When the system pressure exceeds that of the burst disc, the disc bursts and allows water to flow out of the holder's cap, relieving the system of high pressure.

- May be used as primary and/or secondary relief devices
- Tamper-resistant design
- Discs are quickly and easily replaceable
- Assembly components machined from high quality stainless steel

NOTE: Burst Disc not included with assembly.

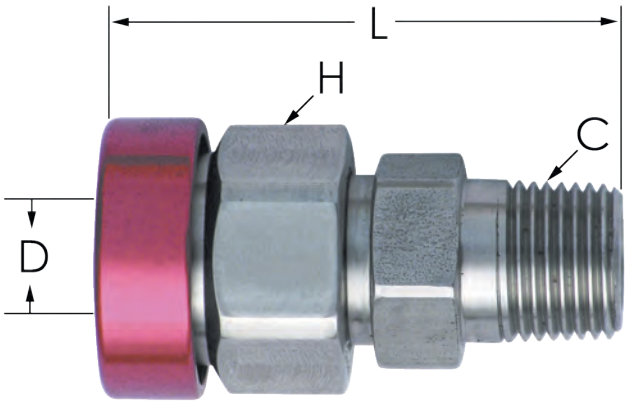

PART NO.	CONNECTION TYPE (C)*	OVERALL LENGTH (L)		DISC BLOW OUT DIAMETER (D)		FLATS (H)		MAX. WORKING PRESSURE	
		in	mm	in	mm	in	mm	psi	bar
51035	1/2" NPT Male	2.7	69	.50	12.7	1.25	31.8	15,000	1034

*See details on all connection types in Section I.

BURST DISCS

DISC SELECTION

For **primary** relief devices, select disc with burst pressure of approximately 1.2 times desired operation pressure.

Example

Operating pressure: 10,000 psi (700 bar)
Desired burst pressure: 10,000 psi x 1.2 = 12,000 psi
700 bar x 1.2 = 840 bar

Select 12,000 psi (827 bar) Burst Disc, part no. 51049

For **secondary** relief devices, select disc with burst pressure of approximately 1.4 times desired operating pressure.

Example

Operating pressure: 10,000 psi (700 bar)
Desired burst pressure: 10,000 psi x 1.4 = 14,000 psi
700 bar x 1.4 = 980 bar

Select 14,000 psi (965 bar) Burst Disc, part no. 51050

PART NO.	BURST DISC PRESSURE	
	psi	bar
53738	6,000	400
51047	8,000	550
51048	10,000	700
51049	12,000	850
51050	14,000	950
51051	16,000	1100
55316	18,000	1250
51052	20,000	1400

REPLACEMENT PARTS

ITEM	PART NO.	DESCRIPTION
1	51033	Base
2	**	Burst Disc
3	51040	Hold-Down Ring
4	51037	Cap

* See Burst Discs chart above

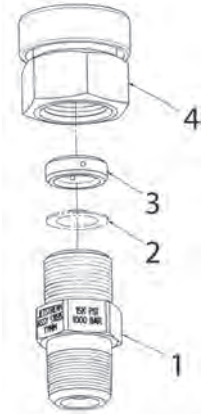

Rubber Hoses

Thermoplastic Hoses & Flex Lances

SS Braided Flex Lances

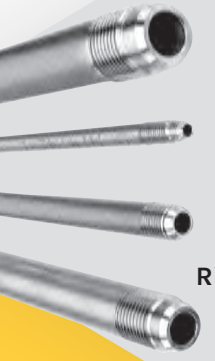

Rigid Lances

HOSES & LANCES

Jetstream provides a full arrangement of hoses and flex lances for high pressure waterblasting. The hoses and lances are designed to be durable and reliable for any 15,000 psi application. A large selection of 25', 35' and 50' hoses and lances are kept in inventory, while a wide variety of lengths can be custom ordered.

All hoses and flex lances are constructed of a plastic core reinforced with high tensile steel wire and enclosed in a durable, flexible thermoplastic jacket. The smooth plastic core minimizes pressure loss and offers maximum resistance to damage caused by aging, moisture absorption and changing environmental factors. All flex lances supplied will be green for 15K rated hose, or yellow for 10K rated, from end to end. Hoses with the abrasion cover are also color-coded accordingly.

A key element of the thermoplastic supply hose is the heavy-duty abrasion cover. This cover prevents excess damage caused by vibration and movement of the hose on rough or uneven surfaces when connecting from the pump to an intermediary high pressure tool, such as a foot gun.

The flex lances are uncovered lances used for the cleaning of small diameter tubes found in heat exchangers, condensers and boilers. The use of smaller flex lances allows for easy passage through bends due to great flexibility and small minimum bend radius.

HOW TO ORDER JETSTREAM HOSES & FLEX LANCES 26108-AAABBCCX

1	**Specify Series Number** Insert dash after Series Number.	26108
2	**Specify Desired Length in Feet (AAA) (000 – 999)** Example: 050 for a 50 ft. long hose.	AAA
3	**Specify End Fitting Codes (BB & CC)** For a hose or lance requiring two different end fittings, list the codes in numerical order when creating the part number.	BB CC
4	**Specify Cover Options Code (X)** Leave blank if no cover is desired. Cover Option Codes: **1** Abrasion Cover Guard **2** Burst Shield Guard **4** Cordura Cover Guard	X

RUBBER WATERBLAST HOSES

These high pressure hose assemblies combine rugged construction, dependability and safe performance.

- Designed specifically for waterblast applications
- Lightweight and flexible
- Available in sizes from 1/4" to 1" (6 mm to 25 mm)
- Standard hoses are uncovered with plated steel male pipe thread end fittings in lengths of 25 or 50 ft
- For other lengths, fittings or cover options, use the custom order instructions on D-3
- See pages D-16-D-17 for pressure drop charts

NOMINAL HOSE I.D.		PART NO.	END FITTINGS CONNECTIONS*	LENGTH		WORKING PRESSURE**		MIN. BURST PRESSURE**		BEND RADIUS	
in	mm			ft	m	psi	bar	psi	bar	in	mm
1	25	53235-0500707	1" NPT Male	50	15.2	10,000	689	25,000	1723	13.4	340
		53235-0250707	1" NPT Male	25	7.6	10,000	689	25,000	1723	13.4	340
3/4	20	51118-0500606	3/4" NPT Male	50	15.2	14,500	1000	25,000	1723	10.0	254
		51118-0250606	3/4" NPT Male	25	7.6	14,500	1000	25,000	1723	10.0	254
1/2"	13	52241-0500505	1/2" NPT Male	50	15.2	15,000	1034	37,500	2585	9.0	228
		52241-0250505	1/2" NPT Male	25	7.6	15,000	1034	37,500	2585	9.0	228
		25513-0500505	1/2" NPT Male	50	15.2	10,000	689	25,000	1723	8.7	220
		25513-0250505	1/2" NPT Male	25	7.6	10,000	689	25,000	1723	8.7	220
3/8	8	52178-0500404	3/8" NPT Male	50	15.2	15,000	1034	37,500	2585	9.0	228
		52178-0250404	3/8" NPT Male	25	7.6	15,000	1034	37,500	2585	9.0	228
		25576-0500404	3/8" NPT Male	50	15.2	10,000	689	25,000	1723	7.0	177
		25576-0250404	3/8" NPT Male	25	7.6	10,000	689	25,000	1723	7.0	177
1/4"	6	25914-0500303	1/4" NPT Male	50	15.2	10,000	689	25,000	1723	5.9	149
		25914-0250303	1/4" NPT Male	25	7.6	10,000	689	25,000	1723	5.9	149

* See details on all connection types in Section I.
** Maximum working pressure and minimum burst pressure may be greater than specified.

RUBBER WATERBLAST HOSES

CUSTOM ORDER

Use the information on this page to build part numbers for custom rubber hoses using the part numbering system described on the previous page.

Abrasion Cover Guard (Code: 1)
Constructed of clear PVC and reinforced with a rigid spiral coil, the Abrasion Cover protects the hose from external damage caused by vibration or movement along rough or uneven surfaces.

Burst Shield Guard (Code: 2)
Constructed of steel wire reinforced heavy-duty synthetic rubber. Helps to protect the user and/or surrounding areas from hose failures.

Cordura Cover Guard (Code: 4)
Heavy-duty, braided nylon cover protects hose from abrasion damage caused by vibration or movement along a rough surface.

HOSE COVER OPTIONS

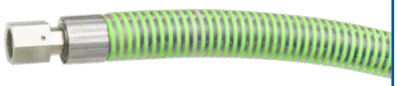

Abrasion Cover Guard

Burst Shield Guard

Cordura Cover Guard

HOSES & LANCES

HOSE SERIES

NOMINAL HOSE I.D.		SERIES	MAX. WORKING PRESSURE*		MIN. BURST PRESSURE*		BEND RADIUS		WEIGHT	
in	mm		psi	bar	psi	bar	in	mm	lb/ft	kg/m
1"	25	53235	10,000	689	25,000	1723	13.4	340	1.94	2.88
3/4"	20	51118	14,500	1000	25,000	1723	10.0	254	1.16	1.72
1/2"	13	52241	15,000	1034	37,500	2585	9.0	228	.76	1.13
1/2"	13	25513	10,000	689	25,000	1723	8.7	220	.61	0.90
3/8"	8	25576	10,000	689	25,000	1723	7.0	177	.50	0.74
3/8"	8	52178	15,000	1034	37,500	2585	9.0	228	.55	0.81
1/4"	6	25914	10,000	689	25,000	1723	5.9	149	.40	0.59

* Maximum working pressure and minimum burst pressure may be greater than specified.

END FITTINGS - MALE PIPE THREADS (NPT MALE)

NOMINAL HOSE I.D.		END FITTING CONNECTION*	FITTING CODE**	
in	mm		SS	PS
1"	25	1" NPT Male	14	07
3/4"	20	3/4" NPT Male	13	06
1/2"	12	1/2" NPT Male	12	05
3/8"	9	3/8" NPT Male	11	04
1/4"	6	1/4" NPT Male	10	03

*See details on all connection types in Section I. **SS: Stainless steel; PS: Plated carbon steel

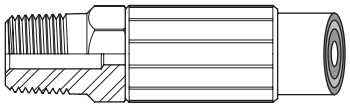

Male Pipe Threads

END FITTINGS - METRIC FEMALE

NOMINAL HOSE I.D.		END FITTING CONNECTION*	FITTING CODE**	
in	mm		SS	PS
1"	25	M42 x 2.0 Female	-	48
3/4"	20	M36 x 2.0 Female	-	47
1/2"	12	M24 x 1.5 Female	-	46
3/8"	9	M22 x 1.5 Female	-	45

*See details on all connection types in Section I. **SS: Stainless steel; PS: Plated carbon steel

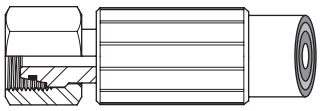

Metric Female

THERMOPLASTIC HOSES

These premium hoses provide the most durable and reliable means of connecting system components.

- Constructed of plastic core reinforced with high tensile steel wire and enclosed in a tough, flexible thermoplastic jacket
- Smooth core minimizes pressure loss and offers the maximum resistance to damage caused by aging, moisture absorption and changing environmental factors
- Available with plated or stainless steel end fittings
- Heavy-duty vinyl abrasion cover prevents damage caused by vibration and movement of hose on rough or uneven surfaces
- See pages D-18–D-19 for pressure drop graphs
- For special lengths, end fittings, or cover options, see custom order instructions on pages D-6–D-8

STANDARD ASSEMBLIES

NOMINAL HOSE I.D.		PART NO.	END FITTINGS		LENGTH		INSIDE DIAMETER		WORKING PRESSURE**		MINIMUM BURST PRESSURE**		BEND RADIUS	
in	mm		CONNECTION*	MATERIAL	ft	mm	in	mm	psi	bar	psi	bar	in	mm
3/4"	20	29313-0500606	3/4" NPT Male	Plated Steel	50	15.2	.74	18.7	10,000	689	37,500	2585	9.8	248
		29313-0250606	3/4" NPT Male	Plated Steel	25	7.6	.74	18.7	10,000	689	37,500	2585	9.8	248
		29313-0501313	3/4" NPT Male	Stainless Steel	50	15.2	.74	18.7	10,000	689	37,500	2585	9.8	248
		29313-0251313	3/4" NPT Male	Stainless Steel	25	7.6	.74	18.7	10,000	689	37,500	2585	9.8	248
1/2"	13	28524-0500505	1/2" NPT Male	Plated Steel	50	15.2	.50	12.7	15,000	1034	37,500	2585	5.6	142
		28524-0250505	1/2" NPT Male	Plated Steel	25	7.6	.50	12.7	15,000	1034	37,500	2585	5.6	142
		28524-0501212	1/2" NPT Male	Stainless Steel	50	15.2	.50	12.7	15,000	1034	37,500	2585	5.6	142
		28524-0251212	1/2" NPT Male	Stainless Steel	25	7.6	.50	12.7	15,000	1034	37,500	2585	5.6	142
5/16"	8	28673-0500404	3/8" NPT Male	Plated Steel	50	15.2	.32	8.1	15,000	1034	37,500	2585	4.3	109
		28673-0250404	3/8" NPT Male	Plated Steel	25	7.6	.32	8.1	15,000	1034	37,500	2585	4.3	109
1/4"	6	28490-0500303	1/4" NPT Male	Plated Steel	50	15.2	.25	6.3	15,000	1034	37,500	2585	4.3	109
		28490-0250303	1/4" NPT Male	Plated Steel	25	7.6	.25	6.3	15,000	1034	37,500	2585	4.3	109

* See details on all connection types in Section I.
** Maximum working pressure and minimum burst pressure may be greater than specified.

THERMOPLASTIC FLEX LANCES

Flex lances are uncovered hoses used for the cleaning of small diameter tubes such as those found in heat exchangers, condensers and boilers.

- Small minimum bend radius allows easy passage through bends
- Constructed of plastic core reinforced with high tensile steel wire and enclosed in a tough, flexible thermoplastic jacket
- Smooth plastic core minimizes pressure loss and offers the maximum resistance to damage caused by aging, moisture absorption and changing environmental factors
- Standard flex lances include plated steel end fittings. Stainless steel fittings available upon request. See pages D-7–D-8
- See pages D-18–D-19 for pressure drop graphs
- Standard lengths are 25, 35 and 50 feet. Other lengths or end fitting combinations can be ordered using the instructions on pages D-6–D-8

STANDARD ASSEMBLIES

NOMINAL HOSE I.D.		PART NO.	END FITTINGS*		INSIDE DIAMETER		LENGTH		END FITTING DIAMETER**		MAX. OPERATING PRESSURE***		BEND RADIUS	
in	mm		CONNECTION	MATERIAL	in	mm	ft	mm	in	mm	psi	bar	in	mm
5/16"	8	27560-0500404	3/8" NPT Male	Plated Steel	.32	8.1	50	15.2	.86	21.8	10,000	689	5.1	129
		27560-0350404	3/8" NPT Male	Plated Steel	.32	8.1	35	10.7	.86	21.8	10,000	689	5.1	129
		27560-0250404	3/8" NPT Male	Plated Steel	.32	8.1	25	7.6	.86	21.8	10,000	689	5.1	129
		28673-0500404	3/8" NPT Male	Plated Steel	.32	8.1	50	15.2	.86	21.8	15,000	1034	4.3	109
		28673-0350404	3/8" NPT Male	Plated Steel	.32	8.1	35	10.7	.86	21.8	15,000	1034	4.3	109
		28673-0250404	3/8" NPT Male	Plated Steel	.32	8.1	25	7.6	.86	21.8	15,000	1034	4.3	109
1/4"	6	26108-0500303	1/4" NPT Male	Plated Steel	.25	6.3	50	15.2	.53	13.4	15,000	1034	4.3	109
		26108-0350303	1/4" NPT Male	Plated Steel	.25	6.3	35	10.7	.53	13.4	15,000	1034	4.3	109
		26108-0250303	1/4" NPT Male	Plated Steel	.25	6.3	25	7.6	.53	13.4	15,000	1034	4.3	109
3/16"	5	26106-0500202	1/8" NPT Male	Plated Steel	.20	5.0	50	15.2	.47	11.9	15,000	1034	3.8	96
		26106-0350202	1/8" NPT Male	Plated Steel	.20	5.0	35	10.7	.47	11.9	15,000	1034	3.8	96
		26106-0250202	1/8" NPT Male	Plated Steel	.20	5.0	25	7.6	.47	11.9	15,000	1034	3.8	96
5/32"	4	26104-0500101	1/16" NPT Male	Plated Steel	.16	4.0	50	15.2	.39	9.9	15,000	1034	3.0	76
		26104-0350101	1/16" NPT Male	Plated Steel	.16	4.0	35	10.7	.39	9.9	15,000	1034	3.0	76
		26104-0250101	1/16" NPT Male	Plated Steel	.16	4.0	25	7.6	.39	9.9	15,000	1034	3.0	76

*See details on end fittings for these assemblies on page D-9 and specifications for all connection types in Section I.
**Outside diameter of end fitting sleeve.
***Maximum working pressure may be greater than specified.

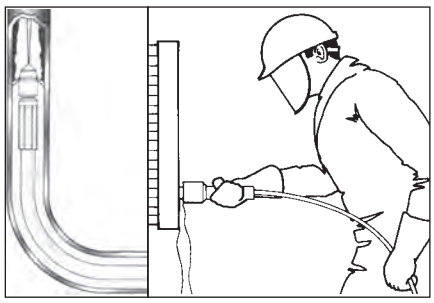

THERMOPLASTIC HOSES & FLEX LANCES

CUSTOM ORDER

Thermoplastic hoses and flex lances are available in custom lengths or with special end fitting combinations or covers. Common lengths and configurations are available on the two preceding pages.

- Constructed of plastic core reinforced with high tensile steel wire and enclosed in a tough, flexible thermoplastic jacket
- Smooth plastic core minimizes pressure loss and offers the maximum resistance to damage caused by aging, moisture absorption, and changing environmental factors
- See pages D-18-D-19 for pressure drop graphs

HOSE SERIES

NOMINAL HOSE I.D.		SERIES	INSIDE DIAMETER		OUTSIDE DIAMETER*		MAX. WORKING PRESSURE**		MIN. BURST PRESSURE**		BEND RADIUS		WEIGHT	
in	mm		in	mm	in	mm	psi	bar	psi	bar	in	mm	lb/ft	kg/m
3/4	20	29313	.74	18.7	1.17	29.7	10,000	689	37,500	2585	9.8	248	.91	1.35
1/2	13	28524	.50	12.7	.87	22.0	15,000	1034	37,500	2585	5.6	142	.40	0.59
1/2	13	28481	.50	12.7	.76	19.3	10,000	689	25,000	1723	7.9	200	.29	0.43
5/16	8	28673	.32	8.1	.63	16.0	15,000	1034	37,500	2585	4.3	109	.26	0.38
5/16	8	27560	.32	8.1	.53	13.4	10,000	689	29,000	1999	5.1	129	.13	0.19
1/4	6	28490	.25	6.3	.49	12.4	15,000	1034	37,500	2585	4.3	109	.19	0.28
1/4	6	26108	.25	6.3	.46	11.6	15,000	1034	31,250	2154	4.3	109	.12	0.17
3/16	5	26106	.20	5.0	.37	9.3	15,000	1034	37,500	2585	3.8	96	.08	0.11
5/32	4	26104	.16	4.0	.32	8.1	15,000	1034	37,500	2585	3.0	76	.07	0.10
1/8	3	28596	.13	3.3	.27	6.8	15,000	1034	36,200	2495	2.4	60	.05	0.07

* Outside diameter of hose material (end fitting diameter will be greater).
** Maximum working pressure and minimum burst pressure may be greater than specified.

HOSE COVER OPTIONS

Abrasion Cover Guard

Burst Shield Guard

Cordura Cover Guard

Abrasion Cover Guard (Code: 1)

Constructed of clear PVC and reinforced with a rigid spiral coil, the VSS color-coded Abrasion Cover protects the hose from external damage caused by vibration or movement along rough or uneven surfaces.

Burst Shield Guard (Code: 2)

Constructed of steel wire reinforced heavy-duty synthetic rubber. The Burst Shield Guard helps to protect the user and/or surrounding areas from hose failures.

Cordura Cover Guard (Code: 4)

Heavy-duty, braided nylon cover protects hose from abrasion damage caused by vibration or movement along a rough surface.

THERMOPLASTIC HOSES & FLEX LANCES

END FITTINGS

Use the information on this page to select the connections desired for custom thermoplastic hoses and flex lances.

MALE PIPE THREADS (NPT Male)

NOMINAL HOSE I.D.		SERIES	END FITTING CONNECTION*	FITTING LENGTH (L)		FITTING O.D. (D)		FITTING CODE**	
in	mm			in	mm	in	mm	SS	PS
3/4	20	29313	1" NPT Male	4.70	119.3	1.45	36.8	-	07
			3/4" NPT Male	4.50	114.3	1.45	36.8	13	06
1/2	13	28524	1/2" NPT Male	3.60	91.4	1.14	28.9	12	05
1/2	13	28481	1/2" NPT Male	3.35	85.0	1.02	25.9	-	05
5/16	8	28673	3/8" NPT Male	2.90	73.6	.86	21.8	-	04
			1/4" NPT Male	2.90	73.6	.86	21.8	-	03
5/16	8	27560	3/8" NPT Male	1.60	40.6	.69	17.5	-	04
			1/4" NPT Male	1.57	39.8	.69	17.5	-	03
1/4	6	28490	1/4" NPT Male	1.39	35.3	.57	14.5	-	03
			1/8" NPT Male	2.21	56.1	.57	14.4	-	02
1/4	6	26108	1/4" NPT Male	1.40	35.5	.53	13.4	-	03
			1/8" NPT Male	2.25	57.1	.55	13.9	-	02
3/16	5	26106	1/4" NPT Male	2.43	61.7	.51	12.9	-	03
			1/8" NPT Male	1.30	33.0	.47	11.9	09	02
5/32	4	26104	1/8" NPT Male	1.20	30.4	.39	9.9	-	02
			1/16" NPT Male	1.20	30.4	.39	9.9	-	01
1/8	3	28596	1/8" NPT Male	1.96	49.7	.55	13.9	-	02
			1/16" NPT Male	1.17	29.7	.36	9.1	-	01

* See details on all connection types in Section I.
** SS: Stainless steel; PS: Plated carbon steel

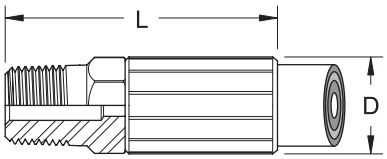

Male Pipe Threads

FEMALE PIPE THREADS (NPT Female)

NOMINAL HOSE I.D.		SERIES	END FITTING CONNECTION*	FITTING LENGTH (L)		FITTING O.D. (D)		FITTING CODE**	
in	mm			in	mm	in	mm	SS	PS
1/4	6	28490	1/4" NPT Female	2.70	68.5	.85	21.5	20	17
1/4	6	26108	1/4" NPT Female	2.70	68.5	.55	13.9	20	17
3/16	5	26106	1/8" NPT Female	1.70	43.1	.47	11.9	-	16
5/32	4	26104	1/16" NPT Female	1.58	40.1	.39	9.9	-	15

* See details on all connection types in Section I.
** SS: Stainless steel; PS: Plated carbon steel

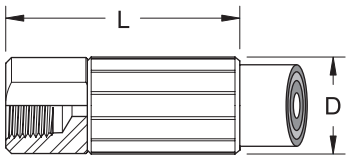

Female Pipe Threads

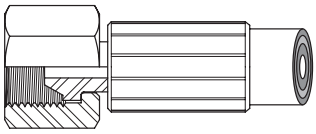

Type M Female

TYPE M FEMALE

NOMINAL HOSE I.D.		SERIES	END FITTING CONNECTION*	FITTING CODE**	
in	mm			SS	PS
3/4	20	29313	1-5/16" Type M Female	44	-
1/2	13	28524	1" Type M Female	42	-
1/2	13	28481	1" Type M Female	42	-
5/16	8	28673	3/4" Type M Female	40	-
5/16	8	27560	3/4" Type M Female	40	-
1/4	6	26108	9/16" Type M Female	39	-
1/4	6	28490	9/16" Type M Female	39	-
3/16	5	26106	9/16" Type M Female	39	-
5/32	4	26104	9/16" Type M Female	39	-
1/8	3	28596	9/16" Type M Female	39	-

*See details on all connection types in Section I.
**SS: Stainless steel; PS: Plated carbon steel

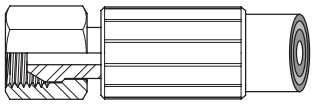

BSP Female

BSP FEMALE

NOMINAL HOSE I.D.		SERIES	END FITTING CONNECTION*	FITTING CODE**	
in	mm			SS	PS
1/2	13	28524	1/2" BSP Female	-	61
1/2	13	28481	1/2" BSP Female	-	61
5/16	8	28673	3/8" BSP Female	-	60
5/16	8	27560	3/8" BSP Female	-	60
1/4	6	28490	1/4" BSP Female	-	59
1/4	6	26108	1/4" BSP Female	-	59
3/16	5	26106	1/4" BSP Female	-	59
5/32	4	26104	9/16" Type M Female	39	-

*See details on all connection types in Section I.
**SS: Stainless steel; PS: Plated carbon steel

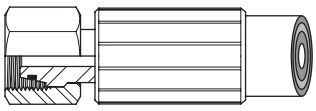

Metric Female

METRIC FEMALE

NOMINAL HOSE I.D.		SERIES	END FITTING CONNECTION*	FITTING CODE**	
in	mm			SS	PS
3/4	20	29313	M36 x 2.0 Female	-	47
1/2	13	28524	M24 x 1.5 Female	50	46
1/2	13	28481	M24 x 1.5 Female	-	46
5/16	8	28673	M24 x 1.5 Female	-	46

*See details on all connection types in Section I.
** SS: Stainless steel; PS: Plated carbon steel

STAINLESS STEEL BRAIDED FLEX LANCES

- Abrasion resistant, braided stainless steel cover
- Teflon® core ensures minimal pressure loss
- Small minimum bend radius allows easy passage through elbows, U-tubes and other sharp bends
- Stainless steel braid-anchored end fittings
- See page D-20 for pressure drop graphs
- Available in 25' and 50' lengths (7.6 m and 15.2 m)
- See dimensions for all end fittings and nozzle flow information for Mini-Mole nozzles on the following pages
- 350 degree F rated lances

NOMINAL HOSE I.D.		PART NO.	END FITTINGS*		INSIDE DIAMETER		LENGTH		END FITTING DIAMETER**		MAX. OPERATING PRESSURE		MIN. BEND RADIUS	
in	mm		INLET END	NOZZLE END	in	mm	ft	mm	in	mm	psi	bar	in	mm
5/16"	8	25571-50	1/4" NPT Male	1/4" NPT Male	.300	7.6	50	15.2	.721	18.3	8,000	551	5.0	127
		25571-25	1/4" NPT Male	1/4" NPT Male	.300	7.6	25	7.6	.721	18.3	8,000	551	5.0	127
1/4"	6	25570-50	1/8" NPT Male	1/8" NPT Male	.229	5.8	50	15.2	.575	14.6	10,000	689	3.0	76
		25570-25	1/8" NPT Male	1/8" NPT Male	.229	5.8	25	7.6	.575	14.6	10,000	689	3.0	76
		50752-50	1/8" NPT Male	5/16" UNEF Male	.229	5.8	50	15.2	.565	14.3	10,000	689	3.0	76
		50752-25	1/8" NPT Male	5/16" UNEF Male	.229	5.8	25	7.6	.565	14.3	10,000	689	3.0	76
1/4"	6	25568-50	1/8" NPT Male	1/8" NPT Male	.229	5.8	50	15.2	.500	12.7	8,000	551	3.0	76
		25568-25	1/8" NPT Male	1/8" NPT Male	.229	5.8	25	7.6	.500	12.7	8,000	551	3.0	76
		50673-50	1/8" NPT Male	5/16" UNEF Male	.229	5.8	50	15.2	.500	12.7	8,000	551	3.0	76
		50673-25	1/8" NPT Male	5/16" UNEF Male	.229	5.8	25	7.6	.500	12.7	8,000	551	3.0	76
1/8"	3	50559-50	1/16" NPT Male	1/16" NPT Male	.125	3.1	50	15.2	.340	8.6	8,000	551	2.0	50
		50559-25	1/16" NPT Male	1/16" NPT Male	.125	3.1	25	7.6	.340	8.6	8,000	551	2.0	50
		51162-50	1/16" NPT Male	1/4" UNEF Female	.125	3.1	50	15.2	.325	8.2	8,000	551	2.0	50
		51162-25	1/16" NPT Male	1/4" UNEF Female	.125	3.1	25	7.6	.325	8.2	8,000	551	2.0	50
		51498-50	1/16" NPT Male	Mini-Mole	.125	3.1	50	15.2	.335	8.5	8,000	551	2.0	50
		51498-25	1/16" NPT Male	Mini-Mole	.125	3.1	25	7.6	.335	8.5	8,000	551	2.0	50

*See end fitting dimensions on page D-8 and specifications for all connection types in Section I.
**Outside diameter of end fitting sleeve.

STAINLESS STEEL BRAIDED FLEX LANCES

END FITTINGS

NPT MALE

For use with female pipe threaded tube cleaning nozzles (see pages G-68 to G-72)..

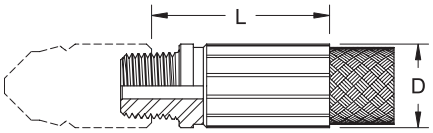

NOMINAL HOSE I.D.	SERIES	END FITTING CONNECTION*	FITTING LENGTH** (L)		FITTING O.D. (D)	
			in	mm	in	mm
5/16"	25571	1/4" NPT Male	1.48	37.5	.721	18.3
1/4"	25570	1/8" NPT Male	1.25	31.7	.575	14.6
1/4"	25568	1/8" NPT Male	1.10	27.9	.500	12.7
1/8"	50559	1/16" NPT Male	.97	24.6	.340	8.6

*See details on all connection types in Section I.
**Add length of nozzle to "L" dimension to determine total rigid length.

MACHINE SCREW THREAD FEMALE

For use with MS2 nozzles (see page G-71).

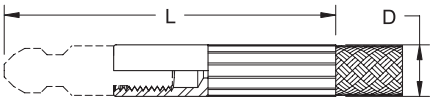

NOMINAL HOSE I.D.	SERIES	END FITTING CONNECTION*	RIGID LENGTH** (L)		FITTING O.D.		NOZZLE TYPE/ SIZE
			in	mm	in	mm	
1/8"	51162	1/4" UNF Female	2.09	53.0	.325	8.2	MS2

*See details on all connection types in Section I.
**Combined length of nozzle and end fitting.

MACHINE SCREW THREAD MALE

For use with Series C nozzles (see page G-69).

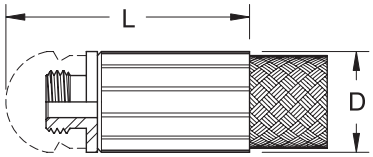

NOMINAL HOSE I.D.	SERIES	END FITTING CONNECTION*	RIGID LENGTH** (L)		FITTING O.D.		NOZZLE TYPE/ SIZE
			in	mm	in	mm	
1/4"	50752	5/16" UNEF Male	1.34	34.0	.565	14.3	C2
1/4"	50673	1/4" UNEF Male	1.38	35.0	.500	12.7	C1

*See details on all connection types in Section I.
**Combined length of nozzle and end fitting.

MINI-MOLE

- Special end fitting with permanently attached nozzle
- Provides the shortest possible rigid length at the end of the lance to allow navigation through very sharp bends
- One standard nozzle pattern available
- Two standard flow ratings available, one for each flex lance length. See nozzle flow chart below.
- Contact a Jetstream sales representative for custom lengths, patterns or flow rates

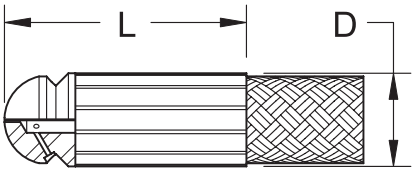

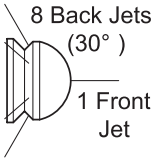

NOMINAL HOSE I.D.	SERIES	FITTING LENGTH (L)		FITTING O.D.	
		in	mm	in	mm
1/8"	51498	.87	22.0	.335	8.5

MINI-MOLE NOZZLE FLOW

LANCE LENGTH		FLOW AT SPECIFIED PRESSURES (PSI/BAR)											
		3000	206	4000	275	5000	344	6000	413	7000	482	8000	551
ft	m	gpm	lpm	gpm	lpm	gpm	lpm	gpm	lpm	gpm	lpm	gpm	lpm
25	7.6	2.2	8.3	2.5	9.4	2.8	10.6	3.1	11.7	3.3	12.4	3.5	13.2
50	15.2	1.6	6.0	1.9	7.1	2.1	7.9	2.3	8.7	2.5	9.4	2.7	10.2

STEELFLEX™ LANCES

- Smallest outside diameters of any commercially available lances
- Special spring temper stainless steel can be used as either flex or rigid lance in very small tubes
- Integral nozzle and inlet fitting
- High strength material permits large inside to outside diameter
- Unlike normal rigid lances, the flexibility of SteelFlex permits use in confined space applications
- Two sizes available in multiple standard lengths as shown in table below. Additional or custom lengths not available.
- Coiled for transport and storage
- See page D-24 for flow charts

PART NO. XX = LENGTH (FT)	STANDARD LENGTHS	OUTSIDE DIAMETER		INSIDE DIAMETER		INLET CONNECTION*	MAX. OPERATING PRESSURE		BEND RADIUS A**		BEND RADIUS B***	
	ft	in	mm	in	mm		psi	bar	in	mm	in	mm
51015-XX	5, 10, 15, 20, 25, 35, 50	.170	4.3	.140	3.5	1/8" NPT Male	10,000	689	19	482	10	254
51020-XX	5, 10, 15, 20, 25, 35	.140	3.5	.110	2.7	1/8" NPT Male	10,000	689	16	406	7	177

*See details on all connection types in Section I.
**Bend Radius A: Radius beyond which permanent set condition may occur.
***Bend Radius B: Radius beyond which kinking may occur.

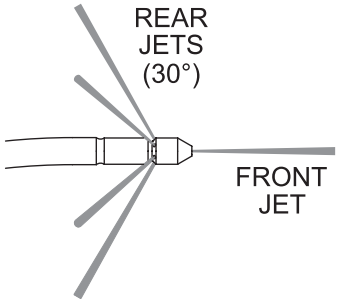

STANDARD PATTERNS

LENGTH (FT)	SERIES 51015 .170" O.D.	SERIES 51020 .140" O.D.
5'	1 Front 6 Back 30° **7 Jets Total**	1 Front 6 Back 30° **7 Jets Total**
10'	1 Front 5 Back 30° **6 Jets Total**	1 Front 6 Back 30° **7 Jets Total**
15'	1 Front 5 Back 30° **6 Jets Total**	1 Front 5 Back 30° **6 Jets Total**
20'	1 Front 5 Back 30° **6 Jets Total**	1 Front 6 Back 30° **7 Jets Total**
25'	1 Front 5 Back 30° **6 Jets Total**	1 Front 5 Back 30° **6 Jets Total**
35'	1 Front 5 Back 30° **6 Jets Total**	1 Front| 4 Back 30° **5 Jets Total**
50'	1 Front 5 Back 30° **6 Jets Total**	Not Available

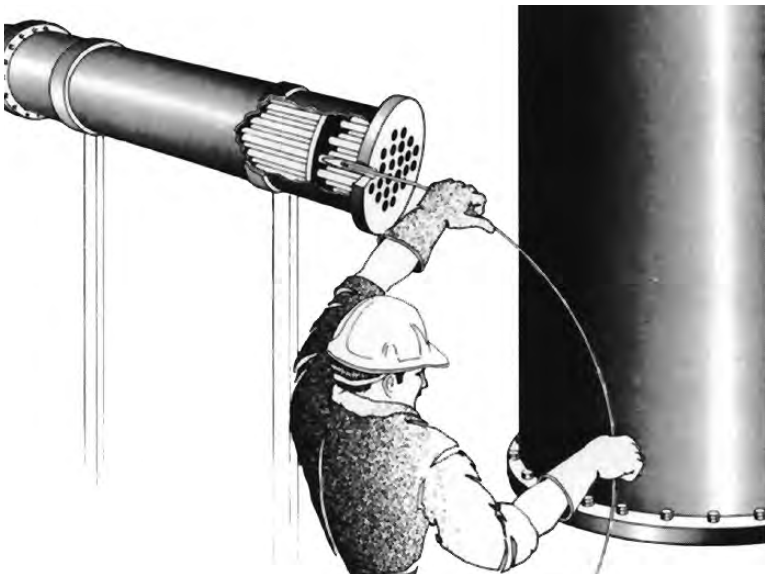

RIGID LANCES

- For use in manual or automatic tube cleaning applications
- To order, use five digit part number followed by a dash (-) and length in feet (up to 35 ft)
- Available in a range of sizes and connections
- See pages D-21 - D-23 for pressure drop graphs

NPT MALE x NPT MALE

For use with female pipe threaded tube cleaning nozzles (see Nozzle Section G).

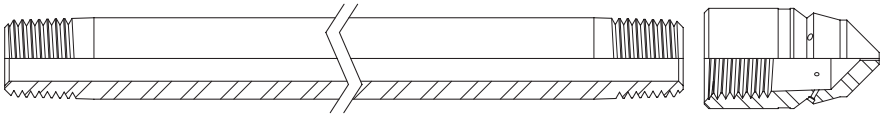

PART NO. XX = LENGTH (FT)	CONNECTION TYPE*		OUTSIDE DIAMETER		INSIDE DIAMETER		MATERIAL	MAX. OPERATING PRESSURE	
	INLET END	NOZZLE END	in	mm	in	mm		psi	bar
54299-XX	1" NPT Male	1" NPT Male	1.315	33.40	.599	15.21	Stainless Steel	15,000	1034
56692-XX	3/4" NPT Male	3/4" NPT Male	1.050	26.67	.434	11.02	Stainless Steel	15,000	1034
53731-XX	3/4" NPT Male	3/4" NPT Male	1.050	26.67	.614	15.59	Stainless Steel	10,000	689
51082-XX	1/2" NPT Male	1/2" NPT Male	.840	21.33	.534	13.56	Stainless Steel	15,000	1034
50596-XX	3/8" NPT Male	3/8" NPT Male	.675	17.14	.415	10.54	Stainless Steel	15,000	1034
50594-XX	1/4" NPT Male	1/4" NPT Male	.540	13.71	.302	7.67	Stainless Steel	15,000	1034
50592-XX	1/8" NPT Male	1/8" NPT Male	.405	10.28	.215	5.46	Stainless Steel	15,000	1034
51081-XX	1/16" NPT Male	1/16" NPT Male	.312	7.92	.182	4.62	Stainless Steel	15,000	1034

*See details on all connection types in Section I.

NPT MALE x NPT FEMALE

For use with MP Series nozzles (see page G-71).

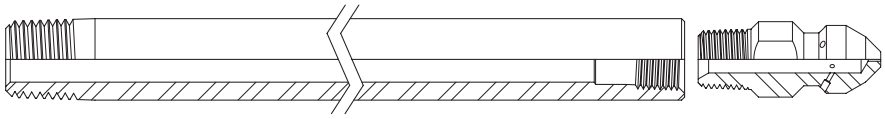

PART NO. XX = LENGTH (FT)	CONNECTION TYPE*		OUTSIDE DIAMETER		INSIDE DIAMETER		MATERIAL	MAX. OPERATING PRESSURE		NOZZLE TYPE/ SIZE
	INLET END	NOZZLE END	in	mm	in	mm		psi	bar	
51069-XX	1/2" NPT Male	3/8" NPT Female	.840	21.33	.534	13.56	Stainless Steel	10,000	689	MP4
51068-XX	3/8" NPT Male	1/4" NPT Female	.675	17.14	.415	10.54	Stainless Steel	10,000	689	MP3
51067-XX	1/4" NPT Male	1/8" NPT Female	.540	13.71	.302	7.67	Stainless Steel	10,000	689	MP2
51066-XX	1/8" NPT Male	1/16" NPT Female	.405	10.28	.215	5.46	Stainless Steel	10,000	689	MP1

*See details on all connection types in Section I.

NPT MALE x .56MP MALE

For use with female pipe threaded tube cleaning nozzles (see Nozzle Section G).

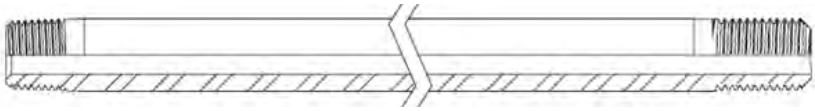

PART NO. XX = LENGTH (FT)	CONNECTION TYPE*		OUTSIDE DIAMETER		INSIDE DIAMETER		MATERIAL	MAX. OPERATING PRESSURE	
	INLET END	NOZZLE END	in	mm	in	mm		psi	bar
J55624-XX	1/4" NPT Male	.56 MP Male	.54	13.71	.312	7.92	Stainless Steel	15,000	1034

*See details on all connection types in Section I.

NPT MALE x .56JS LANCE MALE

For use with female pipe threaded tube cleaning nozzles (see Nozzle Section G).

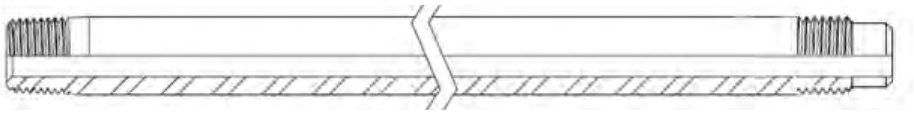

PART NO. XX = LENGTH (FT)	CONNECTION TYPE*		OUTSIDE DIAMETER		INSIDE DIAMETER		MATERIAL	MAX. OPERATING PRESSURE	
	INLET END	NOZZLE END	in	mm	in	mm		psi	bar
J55681-XX	1/4" NPT Male	.56 JS Lance Male	.54	13.71	.312	7.92	Stainless Steel	15,000	1034

*See details on all connection types in Section I.

NPT MALE x MACHINE SCREW THREAD FEMALE

For use with Series MS nozzles (see Nozzle Section G).

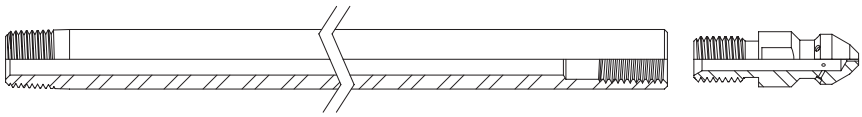

PART NO. XX = LENGTH (FT)	CONNECTION TYPE*		OUTSIDE DIAMETER		INSIDE DIAMETER		MATERIAL	MAX. OPERATING PRESSURE		NOZZLE TYPE/ SIZE
	INLET END	NOZZLE END	in	mm	in	mm		psi	bar	
54411-XX	1/8" NPT Male	5/16" UNF Female	.405	10.28	.215	5.46	Stainless Steel	10,000	689	MS3

*See details on all connection types in Section I.

MACHINE SCREW THREAD MALE x MACHINE SCREW THREAD FEMALE

For use with Series MS nozzles (see Nozzle section G).

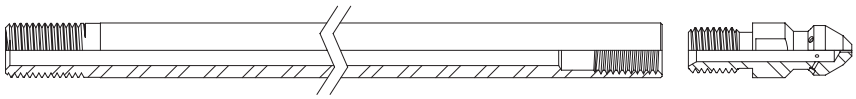

PART NO. XX = LENGTH (FT)	CONNECTION TYPE*		OUTSIDE DIAMETER		INSIDE DIAMETER		MATERIAL	MAX. OPERATING PRESSURE		NOZZLE TYPE/SIZE
	INLET END	NOZZLE END	in	mm	in	mm		psi	bar	
51062-XX	3/8" UNF Male	5/16" UNF Female	.375	9.52	.209	5.30	Alloy Steel	10,000	689	MS3
51061-XX	5/16" UNF Male	1/4" UNF Female	.312	7.92	.182	4.62	Stainless Steel	10,000	689	MS2
51059-XX	1/4" UNF Male	#12 UNF Female	.250	6.35	.120	3.04	Alloy Steel	10,000	689	MS1
63222-XX	M10 x .75 Male	5/16 - 24 Female	.415	10.5	.198	5.03	Alloy Steel	20,000	1379	

*See details on all connection types in Section I.

PRESSURE DROP DATA

PRESSURE DROP DATA

The charts on this page and the next are used to approximate how much pressure will be lost through a particular hose or lance at a given flow rate. Because of frictional forces, the water exiting a hose or lance could be at a significantly lower pressure than at entry. In some cases, especially when using smaller hoses and lances, the flow rate that can be used is determined by pressure drop through a lance rather than the pump's maximum output.

PRESSURE DROP & NOZZLE SIZING

Pressure drop is especially important to understand when sizing nozzles. Use the following procedure for correct nozzle sizing:

1. Determine the pressure needed for a particular cleaning operation and subtract that amount from the desired pump operating pressure. The result is the permissible pressure drop.

2. Consult pressure drop chart for the hose to be used to determine what flow rate will result in the permissible pressure drop.

3a. If this flow rate exceeds the maximum flow of the pump, use the chart to find the pressure drop at the maximum pump flow and subtract that amount from the desired pump operating pressure to get the pressure at the nozzle. Then use the flow charts provided for the desired nozzle to select a nozzle, or nozzles, matching the desired flow and pressure.

3b. If this flow rate is within the capability of the pump, use the flow charts provided for the desired nozzle to select a nozzle, or nozzles, matching the desired flow and pressure.

NOTE: Doubling the length of a hose or lance will result in approximately twice the pressure drop at the same flow rate.

1" RUBBER WATERBLAST HOSE
Series 53235

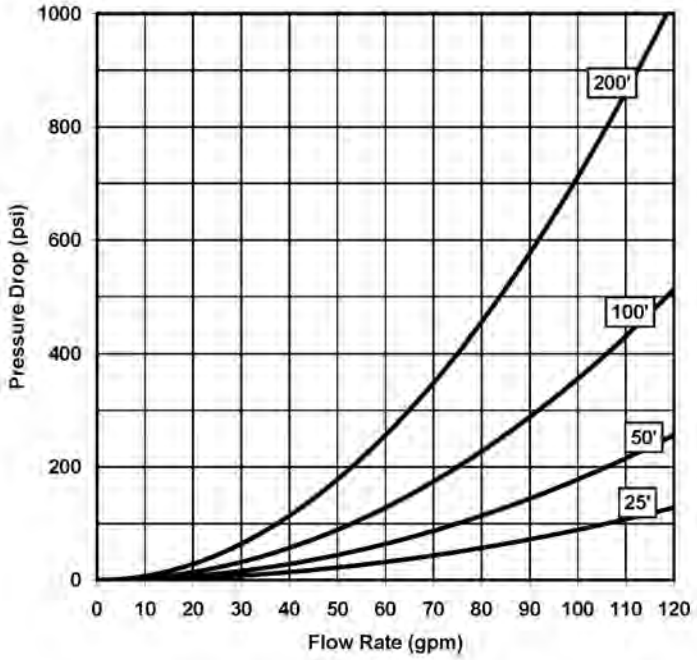

PRESSURE DROP DATA
RUBBER WATERBLAST HOSES

3/4" RUBBER WATERBLAST HOSE
Series 51118

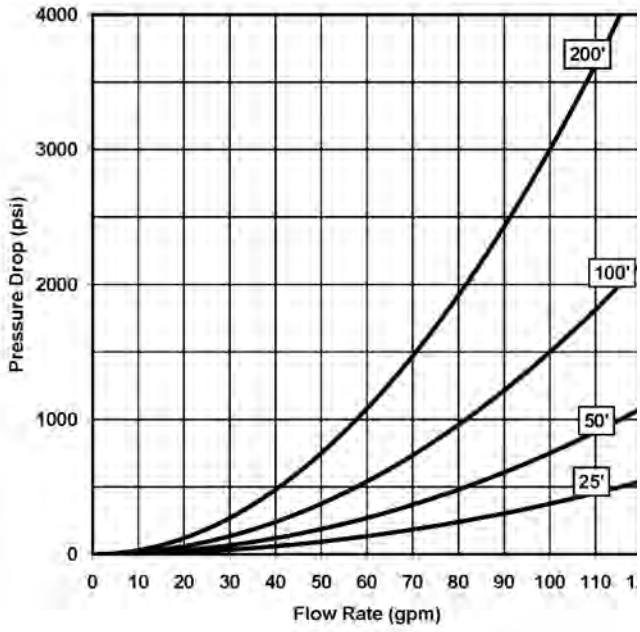

1/2" RUBBER WATERBLAST HOSE
Series 25513 & 52241

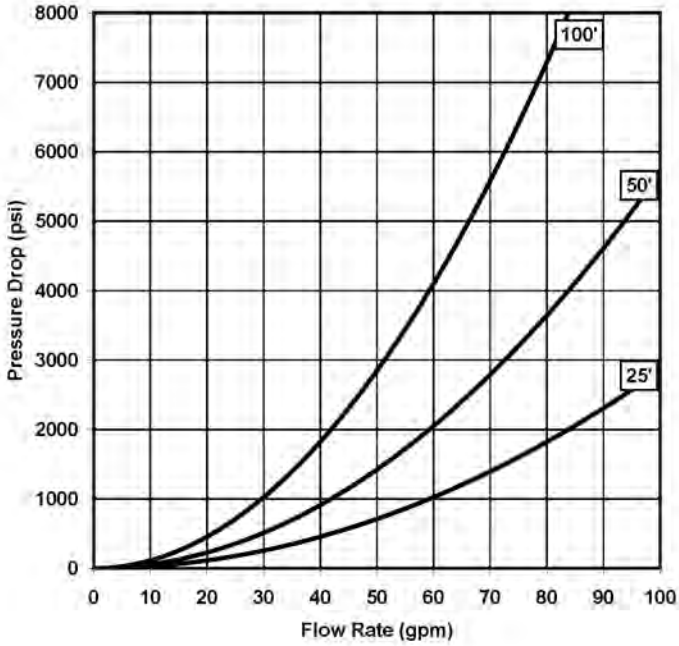

3/8" RUBBER WATERBLAST HOSE
SERIES 25576 & 52178

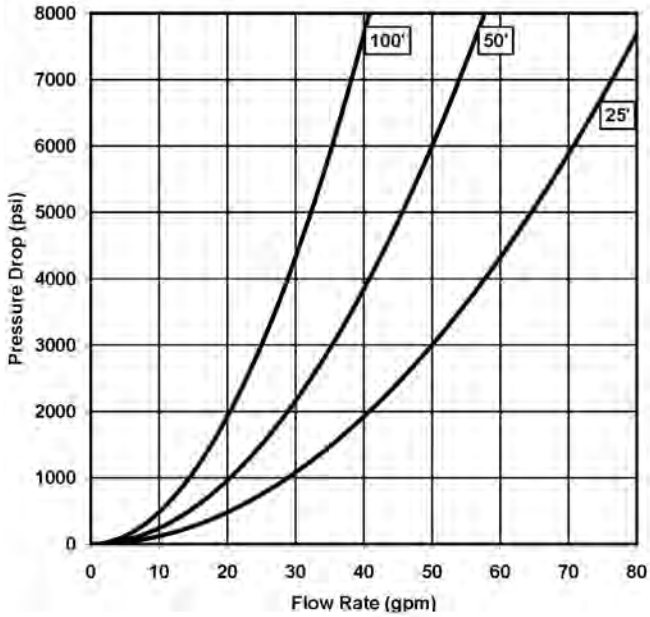

1/4" RUBBER WATERBLAST HOSE
SERIES 25914

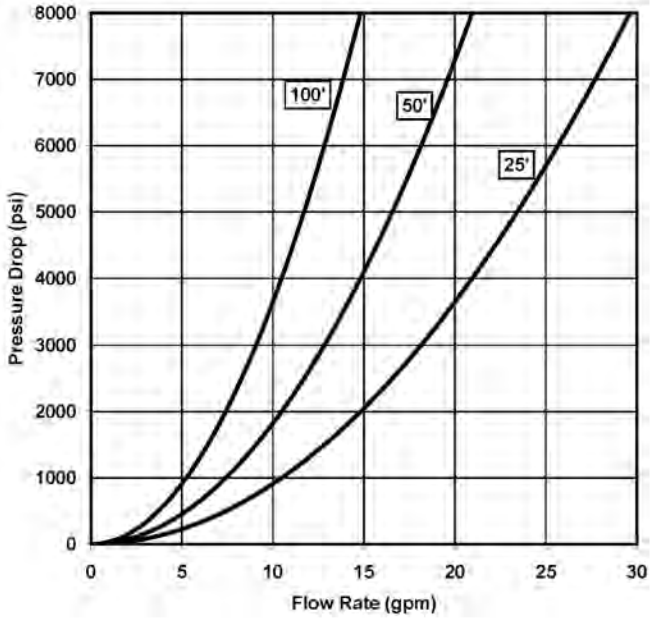

PRESSURE DROP DATA

THERMOPLASTIC HOSES & FLEX LANCES

3/4" (20 MM) THERMOPLASTIC HOSE & FLEX LANCE – SERIES 29313

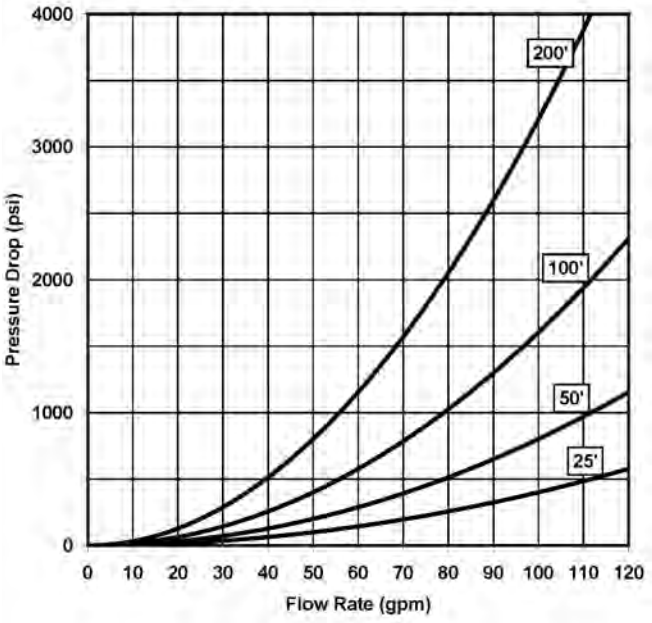

1/2" (13 MM) THERMOPLASTIC HOSE & FLEX LANCE – SERIES 28481 & 28524

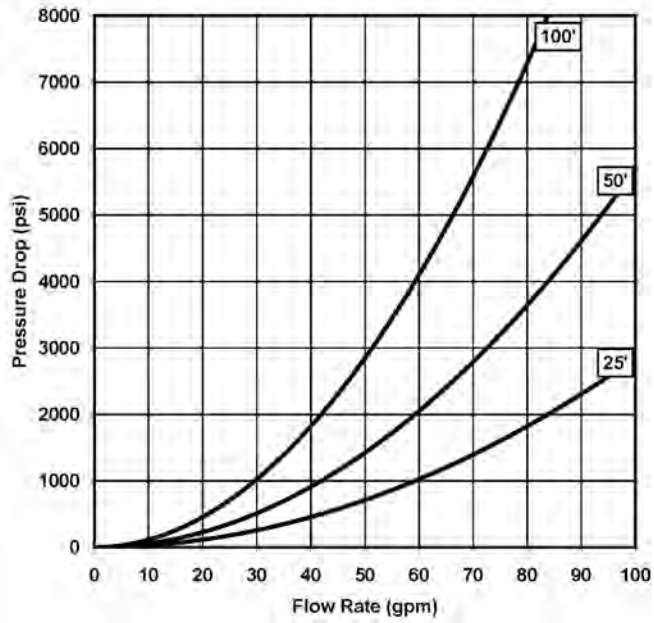

5/16" (8 MM) THERMOPLASTIC HOSE & FLEX LANCE – SERIES 27560 & 28673

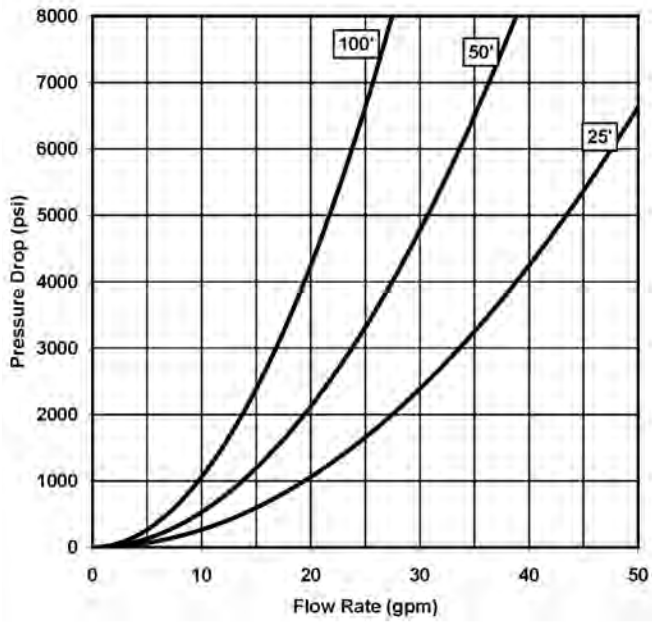

1/4" (6 MM) THERMOPLASTIC HOSE & FLEX LANCE – SERIES 26108 & 28490

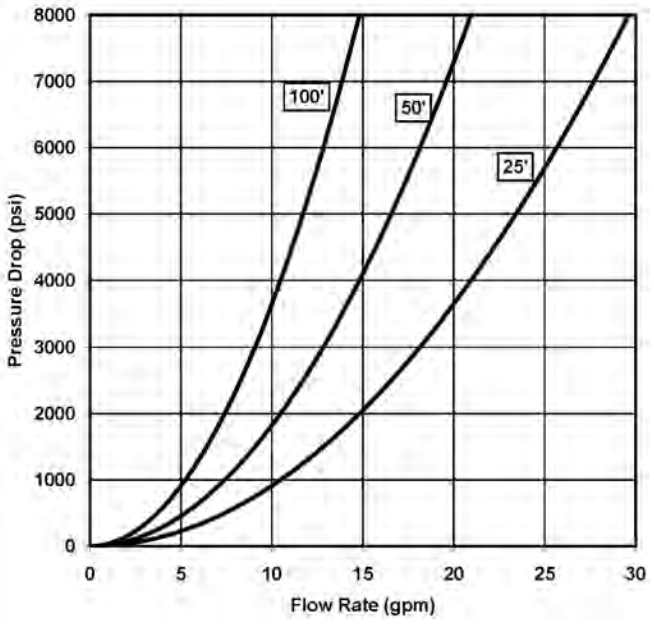

PRESSURE DROP DATA

THERMOPLASTIC HOSES & FLEX LANCES

3/16" (5 MM) THERMOPLASTIC HOSE & FLEX LANCE – SERIES 26106

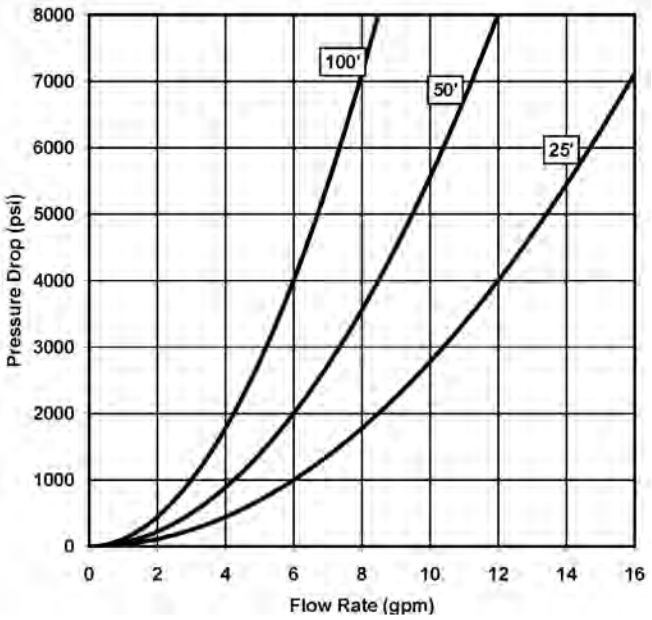

5/32" (4 MM) THERMOPLASTIC HOSE & FLEX LANCE – SERIES 26104

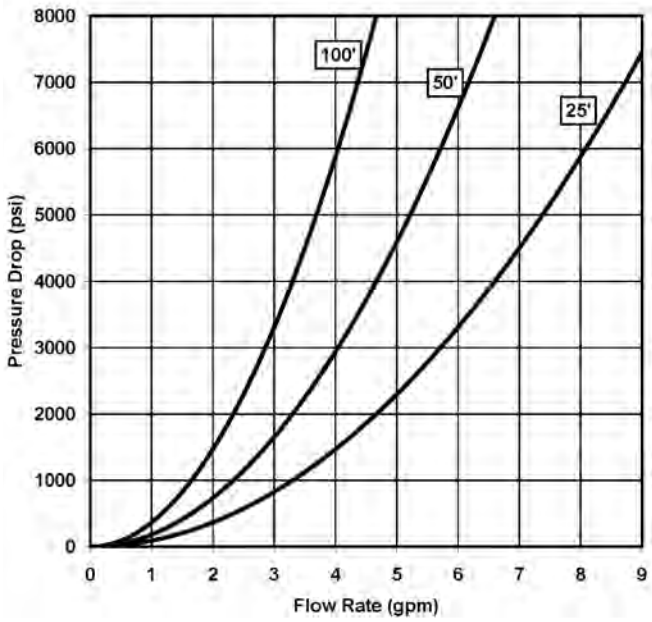

1/8" (3 MM) THERMOPLASTIC HOSE & FLEX LANCE – SERIES 28596

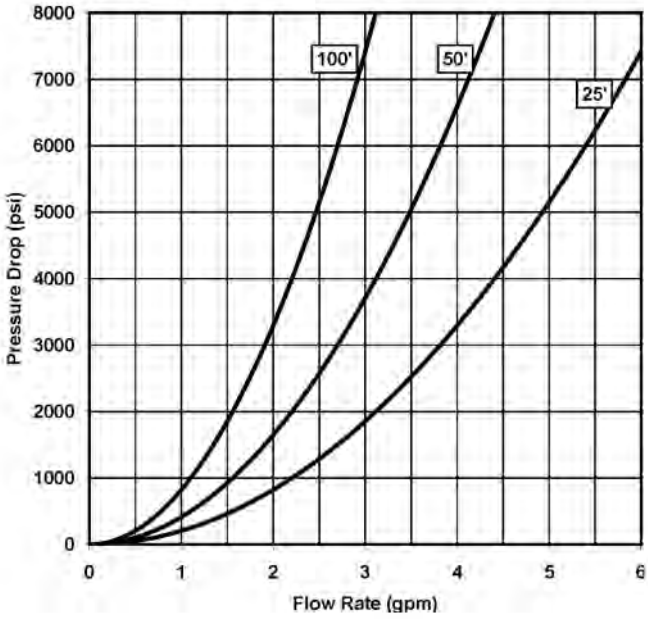

PRESSURE DROP DATA

STAINLESS STEEL BRAIDED FLEX LANCES

5/16" STAINLESS STEEL BRAIDED FLEX LANCE – SERIES 25571

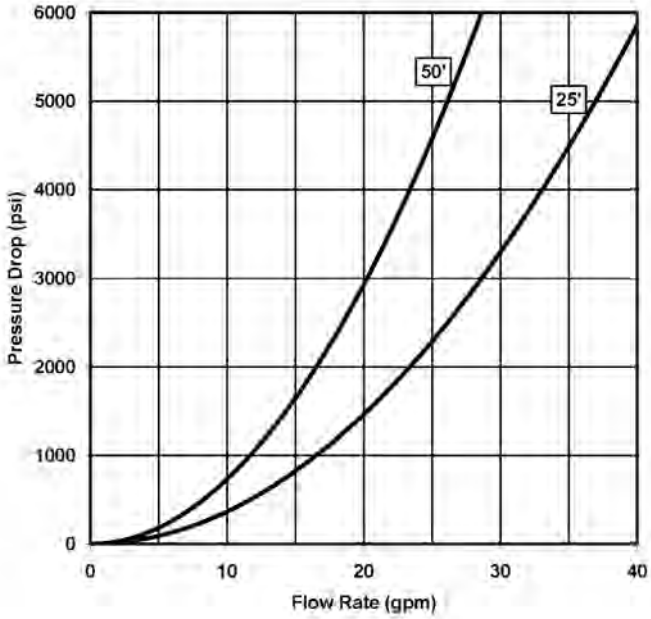

1/4" STAINLESS STEEL BRAIDED FLEX LANCE SERIES 25568, 25570, 50673 & 50752

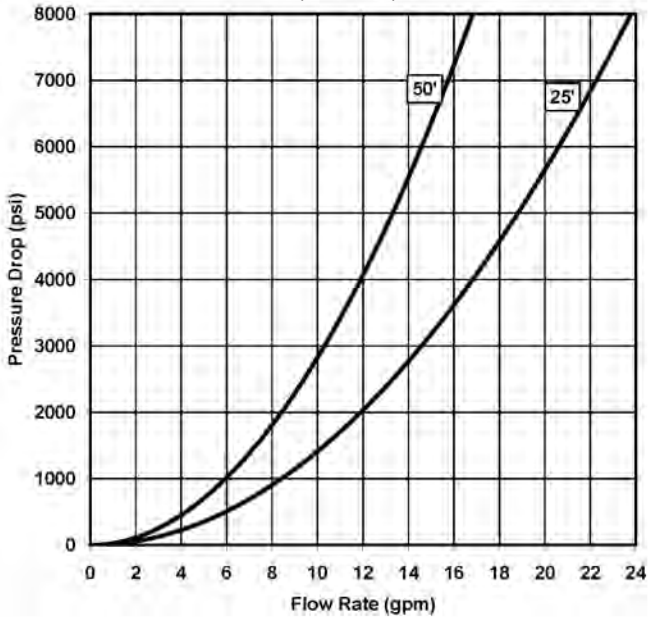

3/16" STAINLESS STEEL BRAIDED FLEX LANCE SERIES 50559, 51162 & 51498

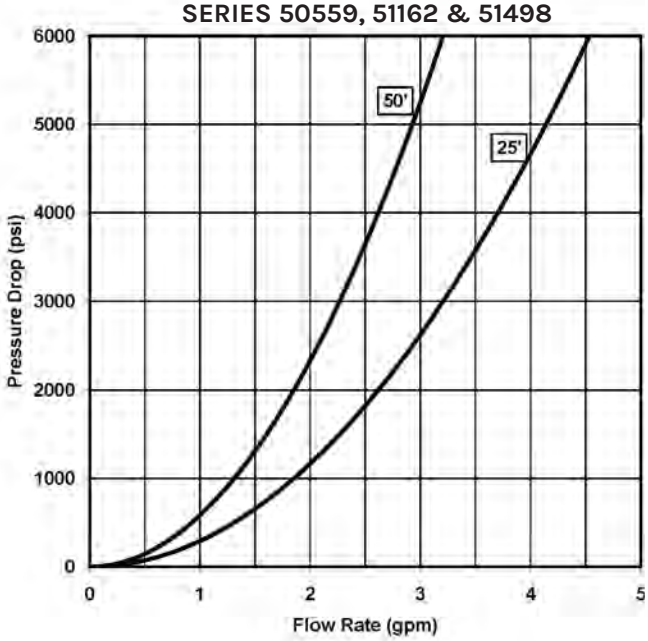

PRESSURE DROP DATA

RIGID LANCES

RIGID LANCES — 1" PIPE
SERIES 54299

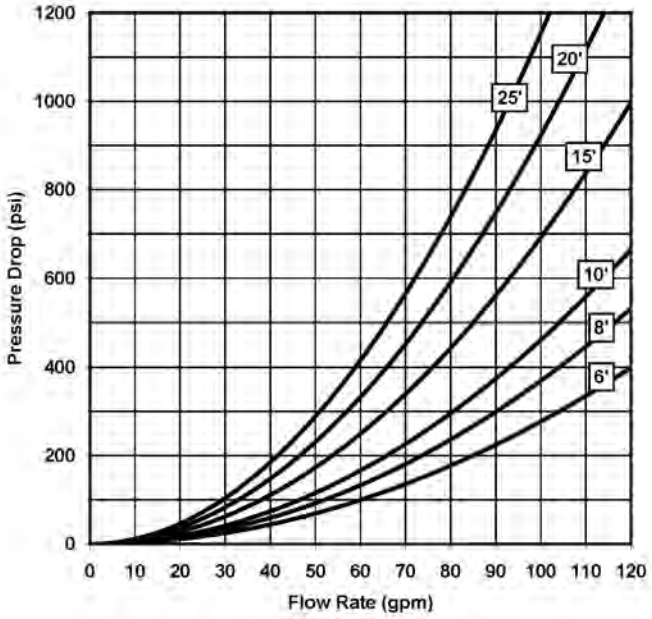

RIGID LANCES — 3/4" PIPE 15,000 PSI
(1034 BAR) - SERIES 56692

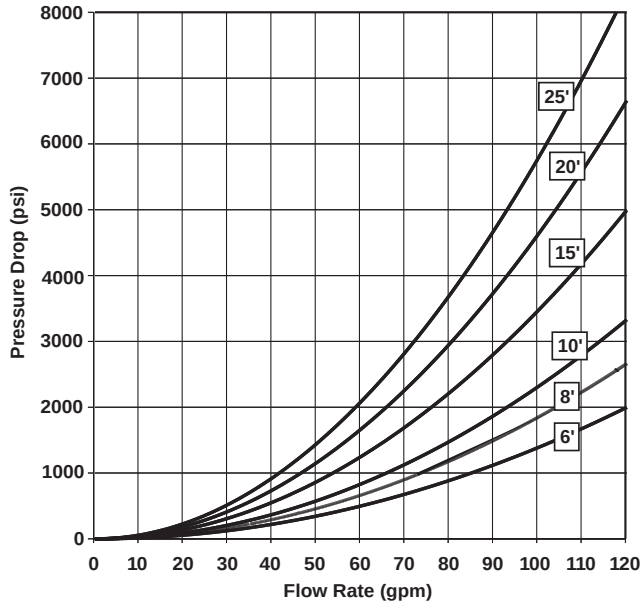

RIGID LANCES — 3/4" PIPE 10,000 PSI
(689 BAR) - SERIES 53731

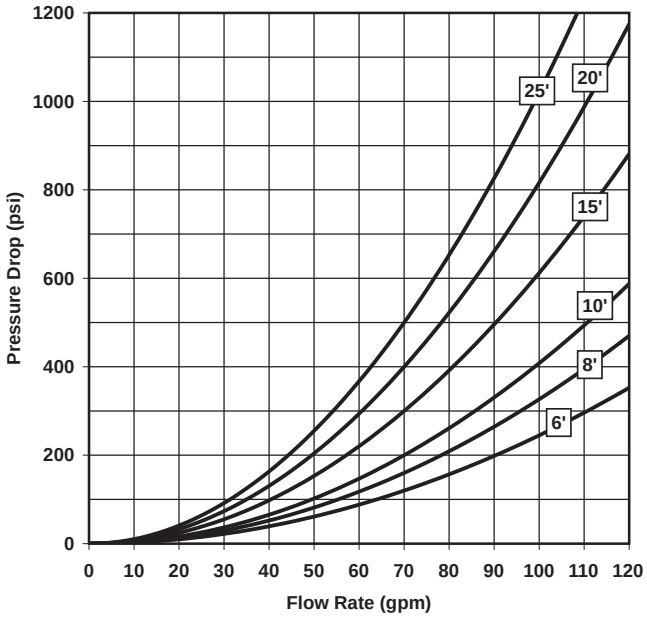

RIGID LANCES — 1/2" PIPE
SERIES 51069 & 51082

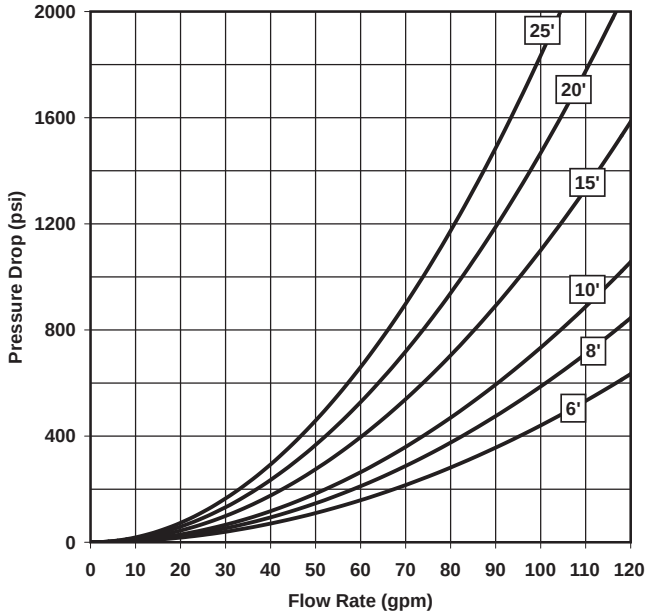

HOSES & LANCES

PRESSURE DROP DATA

RIGID LANCES

RIGID LANCES — 3/8" PIPE SERIES 50596 & 51068

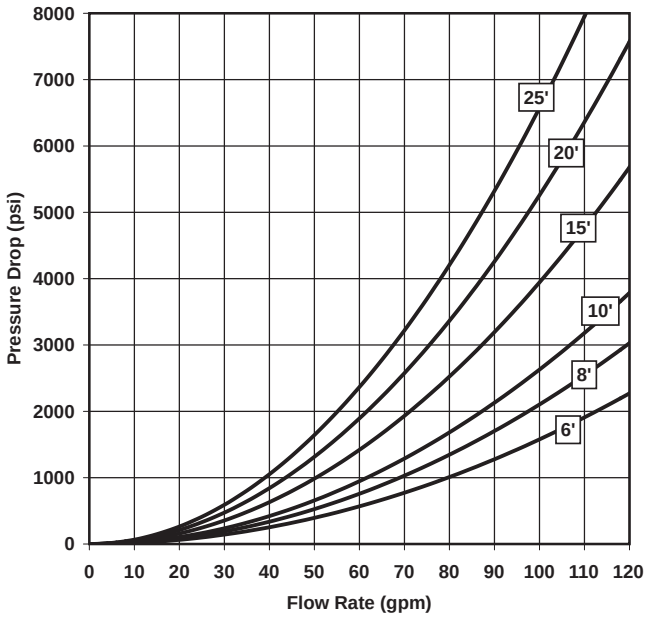

RIGID LANCES — 1/4" PIPE SERIES 50594 & 51067

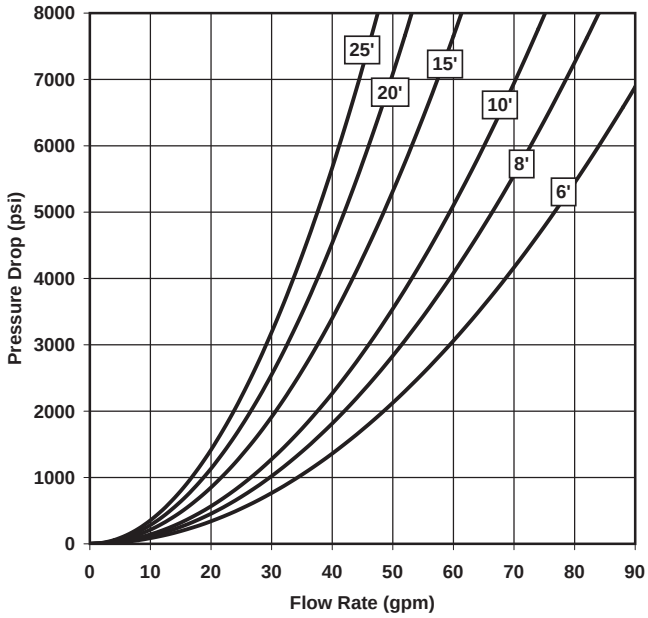

RIGID LANCES — 1/8" PIPE SERIES 50592, 51066 & 54411

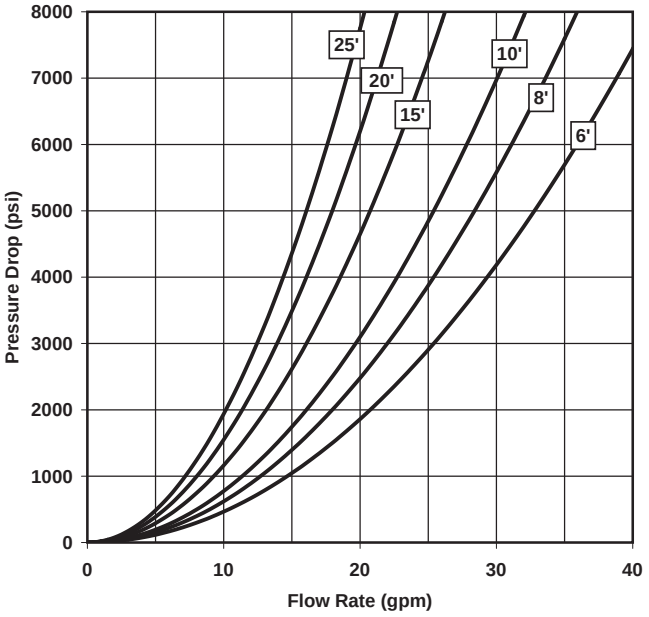

RIGID LANCES — 1/16" PIPE SERIES 51061 & 51081

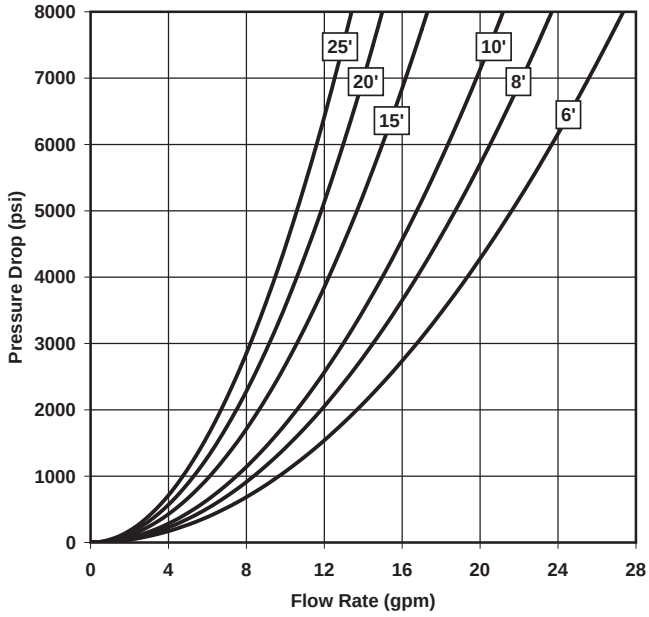

PRESSURE DROP DATA

RIGID LANCES

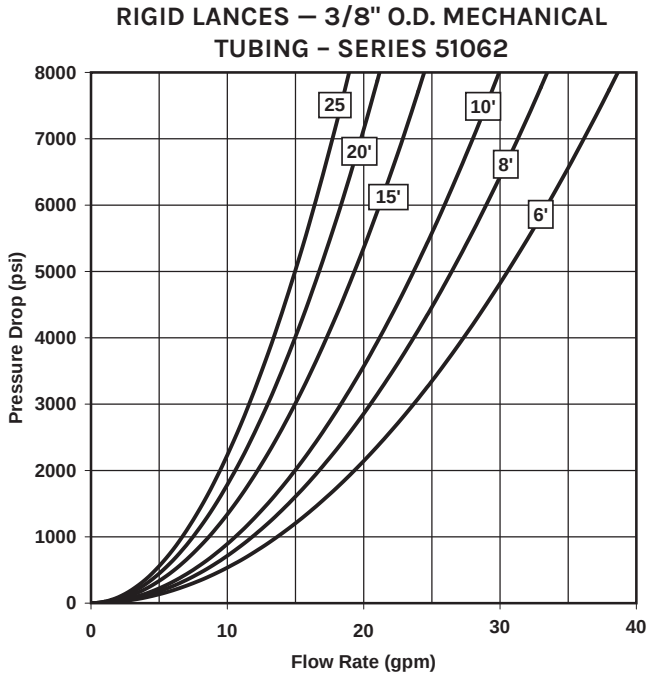

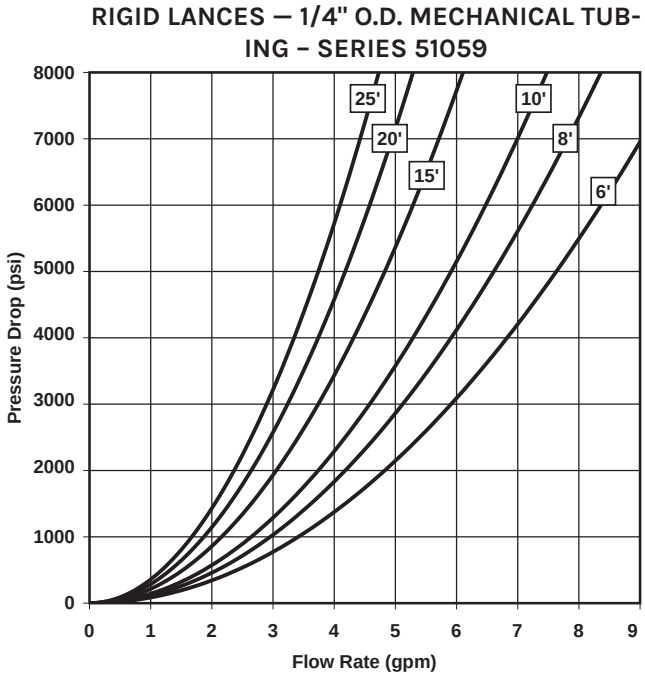

HOSES & LANCES

FLOW DATA
STEELFLEX™ LANCES

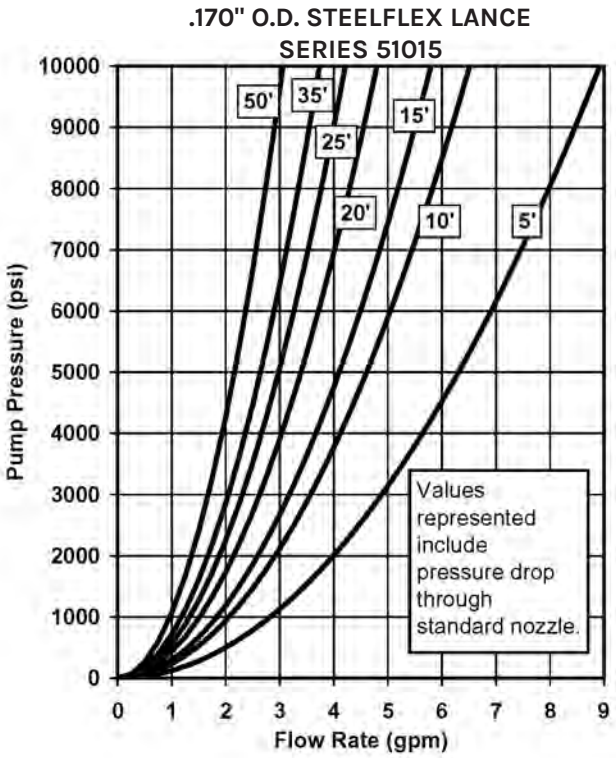

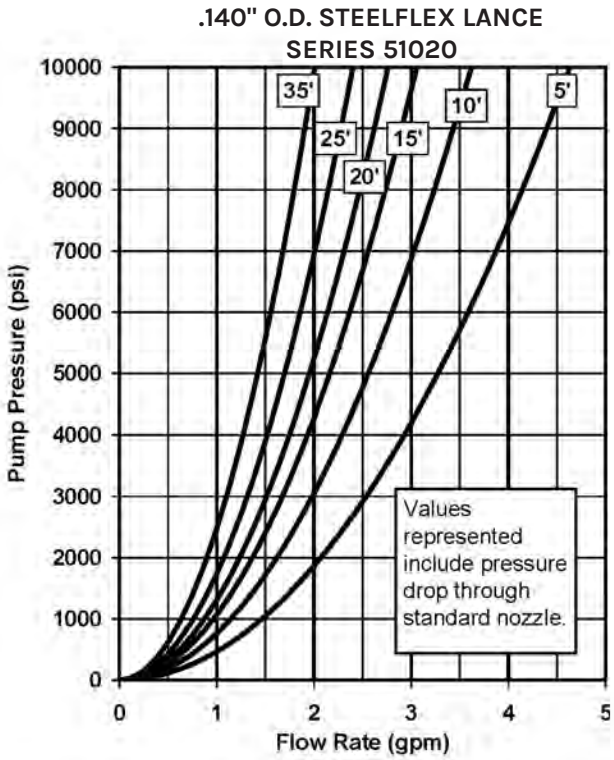

NOTE: These charts represent flow rates at specified pressure, not pressure drop.

FITTINGS

Jetstream offers a wide variety of fittings with various connection types to fit your 15,000 psi application needs. The standard connection types, NPT, HF, HHP, Type M, MP and BSPP, are available in standard thread sizes. A benefit that Jetstream brings to the fittings realm is the ability to offer a wide variety of connections for any application.

*See details on all connection types in Section I.

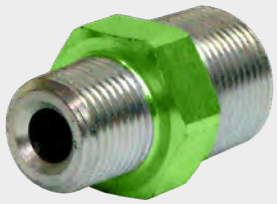

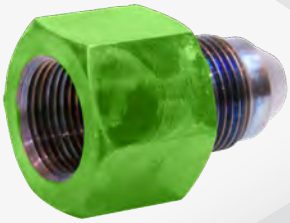

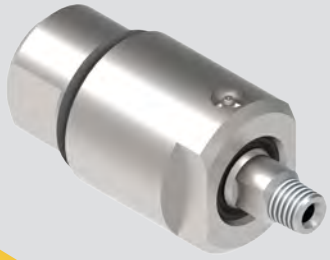

THREAD LUBRICANTS & TEFLON TAPE

Thread Lubricants prevent threaded connections from galling together or seizing up.

Part No. 27721

Blue Goop Thread Lubricant
2 oz. Tube

Part No. 28197

Nickel-Based Anti-Seize
1 lb. Brush Top Can

Part No. 29057

Silver-Based Anti-Seize
7 oz. Stick

Part No. 40282

Teflon Tape
For use on Pipe Thread (NPT) connections, 1/2" x 520" Roll

GAUGE ACCESSORIES

(See page C-37 for available gauges.)

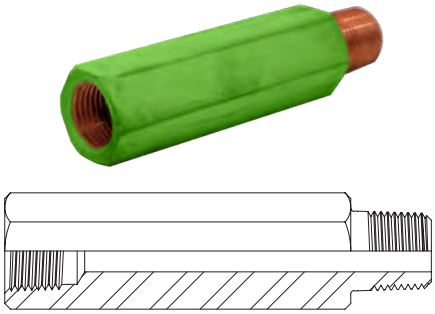

GAUGE EXTENSION

Part No. 55176

- Raises height of gauge for unobstructed reading
- 1/2" NPT Male x 1/2" NPT Female
- 4-1/2" (114 mm) long
- Stainless Steel
- Copper-plated for galling resistance

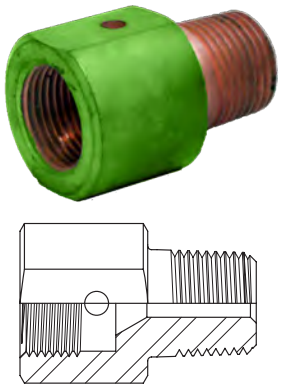

GAUGE ADAPTER

Part No. 55402

- Connects gauge (part no. 29818) to 1/2" NPT Female Port
- 1/2" NPT Male x 9/16" MP Female
- Small I.D. for proper seating of 9/16" HP tube nipple
- Stainless Steel
- Copper-plated for galling resistance
- 9/16" MP gland nut and collar sold separately

QUICK CONNECT COUPLINGS

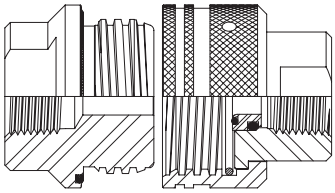

TWIS-LOK QUICK CONNECT COUPLINGS

Rugged Acme threads allow easy, hand-tight connection of hoses and other components. Stainless steel.

PART NO.	CONNECTION TYPE	COUPLING HALVES		SEAL ASSEMBLY	MAX. OPERATING PRESSURE	
		Male	Female		psi	bar
52663	1" NPT Female	52662	52661	52657	15,000	1034
51405	3/4" NPT Female	51334	51665	51624	15,000	1034
51402	1/2" NPT Female	51408	51670	51628	15,000	1034
51552	3/8" NPT Female	51550	51554	51628	15,000	1034

SCREW TYPE QUICK CONNECT COUPLINGS

Easy, hand-tight connection of hoses and other components. Stainless steel. Also known as Partek Style.

PART NO.	CONNECTION TYPE	COUPLING HALVES		SEAL KIT	RETAINING RING	MAX. OPERATING PRESSURE	
		Male	Female			psi	bar
28921	1" NPT Female	28921M	28921F	28921S	J70380	15,000	1034
28844	3/4" NPT Female	28844M	28844F	28844S	J70381	15,000	1034
50989*	1/2" NPT Female	50990	52684	50989S	25690	15,000	1034
54180*	3/8" NPT Female	54178	54180F	50989S	25690	15,000	1034
54754**	1" Type M Male	54763	54762	54789	25690	20,000	1379
54767**	3/4" Type M Male	54764	54758	54789	25690	20,000	1379
54768**	9/16" MP Female	54766	54761	54789	25690	20,000	1379
56547	3/4" MP Female	56614	56616	N/A	J70381	20,000	1379

* 15K part has interchangeable halves.
** 20K part has interchangeable halves.

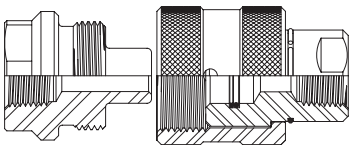

Male Female

FITTINGS

CROSSES

PIPE THREAD (NPT)

Stainless steel.

PART NO.	CONNECTION TYPE	MAX. OPERATING PRESSURE	
		psi	bar
96048	1" NPT Female	15,000	1034
54368	3/4" NPT Female	15,000	1034
90262	1/2" NPT Female	15,000	1034
29532	3/8" NPT Female	15,000	1034
28577	1/4" NPT Female	15,000	1034

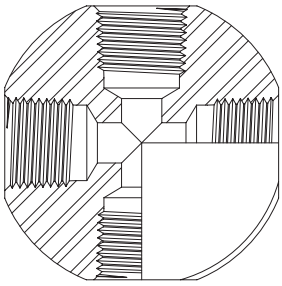

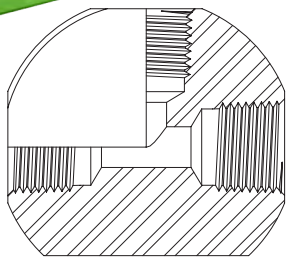

TEES

PIPE THREAD (NPT)

Stainless steel.

PART NO.	CONNECTION TYPE	MAX. OPERATING PRESSURE	
		psi	bar
52673	1" NPT Female	15,000	1034
50385	3/4" NPT Female	15,000	1034
51001	1/2" NPT Female	15,000	1034
50354	3/8" NPT Female	15,000	1034
26166	1/4" NPT Female	15,000	1034
26171	1/8" NPT Female	15,000	1034

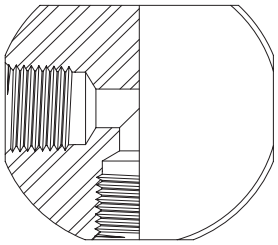

ELBOWS

90° PIPE THREAD (NPT)

Stainless steel.

PART NO.	CONNECTION TYPE	MAX. OPERATING PRESSURE	
		psi	bar
52672	1" NPT Female	15,000	1034
50336	3/4" NPT Female	15,000	1034
50300	1/2" NPT Female	15,000	1034
50298	3/8" NPT Female	15,000	1034
26162	1/4" NPT Female	15,000	1034
26173	1/8" NPT Female	15,000	1034

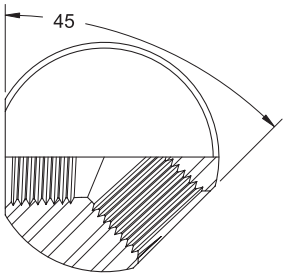

45° PIPE THREAD (NPT)

Stainless steel.

PART NO.	CONNECTION TYPE	MAX. OPERATING PRESSURE	
		psi	bar
56594	1" NPT Female	15,000	1034
50302	3/4" NPT Female	15,000	1034
50824	1/2" NPT Female	15,000	1034
50296	3/8" NPT Female	15,000	1034

HAMMER UNIONS

PIPE THREAD (NPT)

Zinc-plated steel. Figure 300 flat-face style with o-ring seal.

PART NO.	CONNECTION TYPE	SEAL	MAX. OPERATING PRESSURE	
			psi	bar
28319	1-1/4" NPT Female	29319S	10,000	689
27181	1" NPT Female	92011	10,000	689
50392	3/4" NPT Female	26314	10,000	689
29485	1/2" NPT Female	29485S	10,000	689
29486	3/8" NPT Female	29486S	10,000	689

COUPLINGS

PIPE THREAD (NPT)

Machined heat-treated stainless steel to allow small outside diameters for tube cleaning.

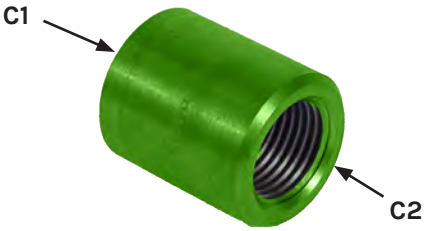

PART NO.	CONNECTION TYPES		OD		MAX. OPERATING PRESSURE	
	CONNECTION 1	CONNECTION 2	in	mm	psi	bar
52676	1" NPT Female	1" NPT Female	2.00	50.8	15,000	1034
28894	1" NPT Female	3/4" NPT Female	2.00	50.8	15,000	1034
J55701	1" NPT Female	1/2" NPT Female	2.00	50.8	15,000	1034
26055	3/4" NPT Female	3/4" NPT Female	1.50	38.1	15,000	1034
26067	3/4" NPT Female	1/2" NPT Female	1.50	38.1	15,000	1034
26059	3/4" NPT Female	3/8" NPT Female	1.50	38.1	15,000	1034
26056	1/2" NPT Female	1/2" NPT Female	1.19	30.2	15,000	1034
26072	1/2" NPT Female	3/8" NPT Female	1.19	30.2	15,000	1034
50342	1/2" NPT Female	1/4" NPT Female	1.25	31.8	15,000	1034
50059	1/2" NPT Female	1/8" NPT Female	1.19	30.2	15,000	1034
26057	3/8" NPT Female	3/8" NPT Female	.88	22.2	15,000	1034
26061	3/8" NPT Female	1/4" NPT Female	1.13	28.6	15,000	1034
26064	3/8" NPT Female	1/8" NPT Female	.94	23.8	15,000	1034
50816	1/4" NPT Female	1/4" NPT Female	.75	19.1	15,000	1034
50852	1/4" NPT Female	1/8" NPT Female	.75	19.1	15,000	1034
J55702	1/4" NPT Female	1/16" NPT Female	.75	19.1	15,000	1034
51191	1/8" NPT Female	1/8" NPT Female	.50	12.7	15,000	1034
50933	1/8" NPT Female	1/16" NPT Female	.50	12.7	15,000	1034
50638	1/16" NPT Female	1/16" NPT Female	.40	10.2	15,000	1034

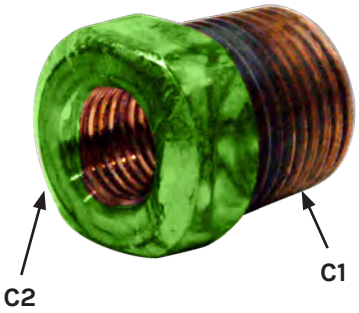

REDUCING BUSHINGS

PIPE THREAD (NPT)

Stainless steel. Copper-plated for galling resistance.

PART NO.	CONNECTION TYPES		MAX. OPERATING PRESSURE	
	CONNECTION 1	CONNECTION 2	psi	bar
29054	2" NPT Male	1-1/2" NPT Female	7,500	517
J70392	2" NPT Male	1" NPT Female	7,500	517
28611	1-1/2" NPT Male	1" NPT Female	7,500	517
29828	1-1/4" NPT Male	1" NPT Female	7,500	517
26157	1" NPT Male	3/4" NPT Female	15,000	1034
26124	1" NPT Male	1/2" NPT Female	15,000	1034
54721	1" NPT Male	1/4" NPT Female	15,000	1034
26065	3/4" NPT Male	1/2" NPT Female	15,000	1034
26063	3/4" NPT Male	3/8" NPT Female	15,000	1034
26069	3/4" NPT Male	1/4" NPT Female	15,000	1034
26074	3/4" NPT Male	1/8" NPT Female	15,000	1034
26062	1/2" NPT Male	3/8" NPT Female	15,000	1034
25904	1/2" NPT Male	1/4" NPT Female	15,000	1034
25902	1/2" NPT Male	1/8" NPT Female	15,000	1034
53623	1/2" NPT Male	1/16" NPT Female	15,000	1034
25903	3/8" NPT Male	1/4" NPT Female	15,000	1034
25901	3/8" NPT Male	1/8" NPT Female	15,000	1034
28822	3/8" NPT Male	1/16" NPT Female	15,000	1034
26073	1/4" NPT Male	1/8" NPT Female	15,000	1034
J55719	1/4" NPT Male	1/16" NPT Female	15,000	1034
26158	1/8" NPT Male	1/16" NPT Female	15,000	1034

HEX NIPPLES

PIPE THREAD (NPT)

Stainless steel nipples are copper plated for galling resistance.

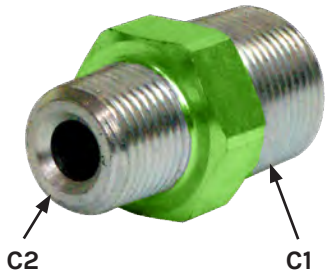

PART NO	CONNECTION TYPES		MATERIAL	MAXIMUM OPERATING PRESSURE	
	CONNECTION 1	CONNECTION 2		psi	bar
J70382	2" NPT Male	2" NPT Male	Stainless Steel	7,500	517
J70383	2" NPT Male	1-1/2" NPT Male	Stainless Steel	7,500	517
29055	1-1/2" NPT Male	1-1/2" NPT Male	Stainless Steel	7,500	517
J70384	1-1/2" NPT Male	1-1/4" NPT Male	Stainless Steel	7,500	517
J70385	1-1/4" NPT Male	1-1/4" NPT Male	Stainless Steel	7,500	517
J70386	1-1/4" NPT Male	1" NPT Male	Stainless Steel	7,500	517
52674	1" NPT Male	1" NPT Male	Stainless Steel	15,000	1034
53054	1" NPT Male	3/4" NPT Male	Stainless Steel	15,000	1034
J70387	1" NPT Male	1/2" NPT Male	Stainless Steel	15,000	1034
26151	3/4" NPT Male	3/4" NPT Male	Stainless Steel	15,000	1034
51702	3/4" NPT Male	1/2" NPT Male	Plated Steel	15,000	1034
J70388	3/4" NPT Male	3/8" NPT Male	Stainless Steel	15,000	1034
J70389	3/4" NPT Male	1/4" NPT Male	Stainless Steel	15,000	1034
50488	1/2" NPT Male	1/2" NPT Male	Stainless Steel	15,000	1034
26153	1/2" NPT Male	3/8" NPT Male	Stainless Steel	15,000	1034
26084	1/2" NPT Male	1/4" NPT Male	Stainless Steel	15,000	1034
26154	1/2" NPT Male	1/8" NPT Male	Stainless Steel	15,000	1034
26152	3/8" NPT Male	3/8" NPT Male	Stainless Steel	15,000	1034
26155	3/8" NPT Male	1/4" NPT Male	Stainless Steel	15,000	1034
25454	3/8" NPT Male	1/8" NPT Male	Stainless Steel	15,000	1034
25455	1/4" NPT Male	1/4" NPT Male	Stainless Steel	15,000	1034
26075	1/4" NPT Male	1/8" NPT Male	Stainless Steel	15,000	1034
J70390	1/4" NPT Male	1/16" NPT Male	Stainless Steel	15,000	1034
25452	1/8" NPT Male	1/8" NPT Male	Stainless Steel	15,000	1034
26156	1/8" NPT Male	1/16" NPT Male	Stainless Steel	15,000	1034
J70391	1/16" NPT Male	1/16" NPT Male	Stainless Steel	15,000	1034

NIPPLES

PIPE THREAD (NPT)

Lengths from 3" to 36”. Stainless steel.

PART NO. Specify Length in inches in Place of XX	CONNECTION TYPE	OD		ID		MAX. WORKING PRESSURE	
		in	mm	in	mm	psi	bar
J55703-XX	1" NPT Male	1.315	33.4	.599	15.2	15,000	1034
26146-XX	3/4" NPT Male	1.050	26.7	.434	11.0	15,000	1034
28875-XX	3/4" NPT Male	1.050	26.7	.614	15.6	10,000	689
55450-XX	1/2" NPT Male	.840	21.3	.534	13.6	15,000	1034
51098-XX	3/8" NPT Male	.675	17.1	.415	10.5	15,000	1034
51106-XX	1/4" NPT Male	.540	13.7	.302	7.7	15,000	1034
25215-XX*	1/8" NPT Male	.405	10.3	.215	5.5	15,000	1034
51397-XX*	1/16" NPT Male	.312	7.9	.182	4.6	15,000	1034

*A 2" length is available.

FITTINGS

PLUGS

PIPE THREAD (NPT)

Stainless steel plugs are copper plated for galling resistance.

HEX HEAD

PART NO.	CONNECTION TYPE	MATERIAL	MAX. OPERATING PRESSURE	
			psi	bar
28602	1" NPT Male	Stainless Steel	10,000	689
26147	3/4" NPT Male	Stainless Steel	15,000	1034
25174	1/2" NPT Male	Steel	15,000	1034
26148	3/8" NPT Male	Steel	15,000	1034
26149	1/4" NPT Male	Steel	15,000	1034
25120	1/8" NPT Male	Steel	15,000	1034

SOCKET HEAD

PART NO.	CONNECTION TYPE	MATERIAL	MAX. OPERATING PRESSURE	
			psi	bar
26164	3/4" NPT Male	Steel	15,000	1034
26115	1/2" NPT Male	Steel	15,000	1034
26077	3/8" NPT Male	Steel	15,000	1034
64682	1/4" NPT Male	Stainless Steel	22,000	1517
26170	1/8" NPT Male	Steel	15,000	1034
25395	1/16" NPT Male	Steel	15,000	1034

Y-FITTINGS

Stainless steel.

PART NO.	CONNECTION TYPE	MAX. OPERATING PRESSURE	
		psi	bar
29678	1" NPT Female	10,000	689
70040	3/4" NPT Female	10,000	689
J70393	1/2" NPT Female	15,000	1034

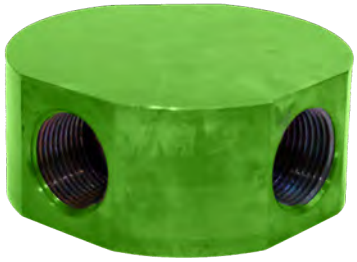

RIGID LANCE ADAPTERS

MACHINE SCREW FEMALE TO PIPE THREAD MALE (NPT MALE)

Used to connect small diameter rigid lances with machine screw threads to pipe threaded hoses and fittings. Stainless steel. Copper plated for galling resistance.

PART NO.	CONNECTION TYPE		MAX. OPERATING PRESSURE	
	CONNECTION 1	CONNECTION 2	psi	bar
51039	1/8" NPT Male	1/4-28UNF Female	10,000	689
51041	1/8" NPT Male	5/16-24UNF Female	10,000	689
51043	1/8" NPT Male	3/8-24UNF Female	10,000	689

*See details on all connection types in Section I.

DUAL LANCE MANIFOLDS

PIPE THREAD (NPT)

Allows simultaneous operation of two lances. Stainless steel.

PART NO.	CONNECTION TYPE		MAX. OPERATING PRESSURE	
	CONNECTION 1	CONNECTION 2	psi	bar
50999	1/2" NPT Female	1/4" NPT Female	15,000	1034
50585	1/2" NPT Female	1/8" NPT Female	15,000	1034
51401	1/2" NPT Female	1/16" NPT Female	15,000	1034

STRAIGHT BOSS PLUGS

Stainless steel.

PART NO.	CONNECTION TYPE	REPLACEMENT TYPE	MAXIMUM OPERATING PRESSURE	
			psi	bar
25702	#12 Straight Boss Male	25670	10,000	689
25703	#8 Straight Boss Male	25824	10,000	689

PRESSURE CONVERSION FITTINGS

PIPE THREAD MALE (NPT MALE) TO TYPE M MALE ADAPTERS

Stainless steel. Copper plated for galling resistance.

PART NO.	CONNECTION TYPE		MAX. OPERATING PRESSURE	
	CONNECTION 1	CONNECTION 2	psi	bar
54719	1" NPT Male	1-5/16" Type M Male	10,000	689
J55704	1" NPT Male	1" Type M Male	10,000	689
28852	3/4" NPT Male	1-5/16" Type M Male	10,000	689
29178	3/4" NPT Male	1" Type M Male	10,000	689
J55706	3/4" NPT Male	3/4" Type M Male	10,000	689
J55707	3/4" NPT Male	9/16" Type M Male	10,000	689
29342	1/2" NPT Male	1" Type M Male	15,000	1034
29185	1/2" NPT Male	3/4" Type M Male	15,000	1034
28702	1/2" NPT Male	9/16" Type M Male	15,000	1034
01437	3/8" NPT Male	9/16" Type M Male	15,000	1034

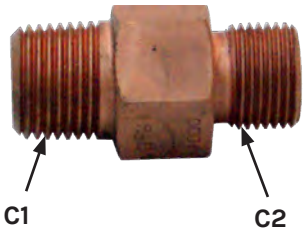

PIPE THREAD FEMALE (NPT FEMALE) TO TYPE M MALE ADAPTERS

Stainless steel.

PART NO.	CONNECTION TYPE		MAX. OPERATING PRESSURE	
	CONNECTION 1	CONNECTION 2	psi	bar
70167	1/2" NPT Female	1" Type M Male	15,000	1034
29327	1/2" NPT Female	3/4" Type M Male	15,000	1034
70168	3/8" NPT Female	3/4" Type M Male	15,000	1034

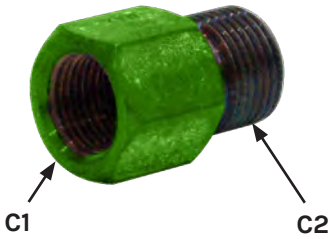

PIPE THREAD MALE (NPT MALE) TO MEDIUM PRESSURE MALE ADAPTERS

Stainless steel. Copper plated for galling resistance.

PART NO.	CONNECTION TYPE		MAX. OPERATING PRESSURE	
	CONNECTION 1	CONNECTION 2	psi	bar
55033	1" NPT Male	1" MP Male	15,000	1034
29669	1" NPT Male	3/4" MP Male	15,000	1034
29316	1" NPT Male	9/16" MP Male	15,000	1034
J55708	3/4" NPT Male	1" MP Male	10,000	689
29253	3/4" NPT Male	3/4" MP Male	10,000	689
28335	1/2" NPT Male	1" MP Male	15,000	1034
28261	1/2" NPT Male	3/4" MP Male	15,000	1034
27971	1/2" NPT Male	9/16" MP Male	15,000	1034
29000	1/2" NPT Male	3/8" MP Male	15,000	1034
J55709	3/8" NPT Male	9/16" MP Male	15,000	1034
J55711	3/8" NPT Male	3/8" MP Male	15,000	1034
29183	1/4" NPT Male	9/16" MP Male	15,000	1034
28610	1/4" NPT Male	3/8" MP Male	15,000	1034

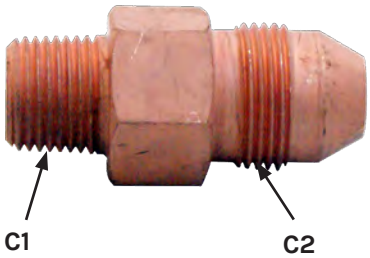

PIPE THREAD FEMALE (NPT FEMALE) TO MEDIUM PRESSURE MALE ADAPTERS

Stainless steel.

PART NO.	CONNECTION TYPE		MAX. OPERATING PRESSURE	
	CONNECTION 1	CONNECTION 2	psi	bar
67896	1" NPT Female	1" MP Male	10,000	689
29534	3/4" NPT Female	3/4" MP Male	10,000	689
29673	1/2" NPT Female	1" MP Male	15,000	1034
28903	1/2" NPT Female	3/4" MP Male	15,000	1034
28334	1/2" NPT Female	9/16" MP Male	15,000	1034
28003	1/2" NPT Female	3/8" MP Male	15,000	1034
28386	3/8" NPT Female	9/16" MP Male	15,000	1034
54958	3/8" NPT Female	3/8" MP Male	15,000	1034
29184	1/8" NPT Female	9/16" MP Male	15,000	1034
29182	1/4" NPT Female	9/16" MP Male	15,000	1034

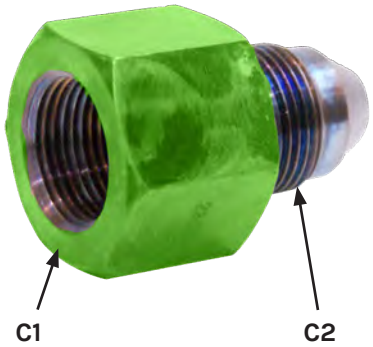

PIPE THREAD MALE (NPT MALE) TO MEDIUM PRESSURE FEMALE ADAPTERS

Stainless steel. Copper plated for galling resistance.

PART NO.	CONNECTION TYPE		MAX. OPERATING PRESSURE	
	CONNECTION 1	CONNECTION 2	psi	bar
29392	3/4" NPT Male	1" MP Female	10,000	689
00111	3/4" NPT Male	3/4" MP Female	10,000	689
28092	1/2" NPT Male	9/16" MP Female	15,000	1034
J55712	1/2" NPT Male	3/8" MP Female	15,000	1034
J55713	3/8" NPT Male	9/16" MP Female	15,000	1034
J55714	3/8" NPT Male	3/8" MP Female	15,000	1034
J55716	1/4" NPT Male	9/16" MP Female	15,000	1034
J55717	1/4" NPT Male	3/8" MP Female	15,000	1034

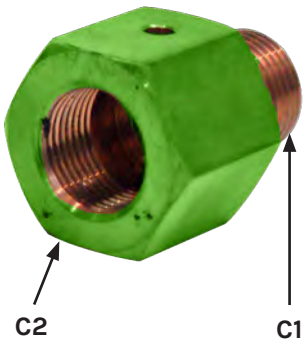

PIPE THREAD FEMALE (NPT FEMALE) TO MEDIUM PRESSURE FEMALE ADAPTERS

Stainless steel.

PART NO.	CONNECTION TYPE		MAX. OPERATING PRESSURE	
	CONNECTION 1	CONNECTION 2	psi	bar
29186	3/4" NPT Female	9/16" MP Female	10,000	689
29279	1/2" NPT Female	3/4" MP Female	15,000	1034
29010	1/2" NPT Female	9/16" MP Female	15,000	1034
28523	1/4" NPT Female	9/16" MP Female	15,000	1034

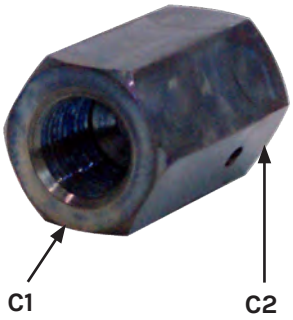

PIPE THREAD FEMALE (NPT FEMALE) TO HIGH PRESSURE MALE ADAPTER

Stainless steel.

PART NO.	CONNECTION TYPE		MAX. OPERATING PRESSURE	
	CONNECTION 1	CONNECTION 2	psi	bar
59189	1/2" NPT Female	1/4" HP Male	15,000	1034

PIPE THREAD MALE (NPT MALE) TO BRITISH STANDARD PIPE (BSPP) MALE ADAPTERS

Stainless steel. Copper plated for galling resistance.

PART NO.	CONNECTION TYPE		MAX. OPERATING PRESSURE	
	CONNECTION 1	CONNECTION 2	psi	bar
J55789	1" NPT Male	G3/4" BSPP Male	15,000	1034
55099	3/4" NPT Male	G3/4" BSPP Male	15,000	1034
55098	1/2" NPT Male	G1/2" BSPP Male	15,000	1034
55097	1/2" NPT Male	G3/8" BSPP Male	15,000	1034
55096	1/2" NPT Male	G1/4" BSPP Male	15,000	1034
67173	3/4" NPT Male	G1/4" BSPP Male	15,000	1034

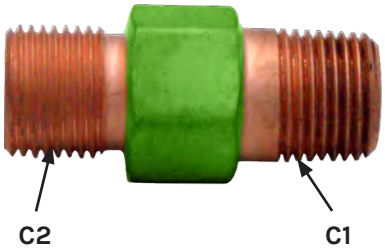

FITTINGS

PIPE THREAD FEMALE (NPT FEMALE) TO BRITISH STANDARD PIPE (BSPP) MALE ADAPTERS

Stainless steel.

PART NO.	CONNECTION TYPE		MAX. OPERATING PRESSURE	
	CONNECTION 1	CONNECTION 2	psi	bar
55224	1/2" NPT Female	G1/2" BSPP Male	15,000	1034
62253	1/2" NPT Female	G1" BSPP Male	15,000	1034

PIPE THREAD MALE (NPT MALE) TO METRIC MALE ADAPTERS

Stainless steel. Copper plated for galling resistance.

PART NO.	CONNECTION TYPE		MAX. OPERATING PRESSURE	
	CONNECTION 1	CONNECTION 2	psi	bar
55094	3/4" NPT Male	M36 x 2.0 Male	15,000	1034
55093	3/4" NPT Male	M24 x 1.5 Male	15,000	1034
55092	1/2" NPT Male	M24 x 1.5 Male	15,000	1034
55091	1/2" NPT Male	M22 x 1.5 Male	15,000	1034

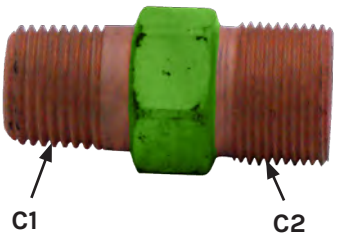

PIPE THREAD FEMALE (NPT FEMALE) TO METRIC MALE ADAPTERS

Stainless steel.

PART NO.	CONNECTION TYPE		MAX. OPERATING PRESSURE	
	CONNECTION 1	CONNECTION 2	psi	bar
55223	1/2" NPT Female	M24 x 1.5 Male	15,000	1034
55222	1/2" NPT Female	M22 x 1.5 Male	15,000	1034

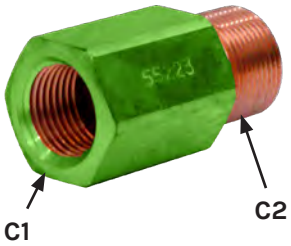

TYPE M MALE CONNECTORS

Stainless steel.

PART NO.	CONNECTION TYPE		MAX. OPERATING PRESSURE	
	CONNECTION 1	CONNECTION 2	psi	bar
29058	1-5/16" Type M Male	1-5/16" Type M Male	20,000	1379
29059	1-5/16" Type M Male	1" Type M Male	20,000	1379
29060	1-5/16" Type M Male	3/4" Type M Male	20,000	1379
29061	1" Type M Male	1" Type M Male	20,000	1379
28487	1" Type M Male	3/4" Type M Male	20,000	1379
29019	1" Type M Male	9/16" Type M Male	20,000	1379
28196	3/4" Type M Male	3/4" Type M Male	20,000	1379
29062	3/4" Type M Male	9/16" Type M Male	20,000	1379
27527	9/16" Type M Male	9/16" Type M Male	40,000	2750

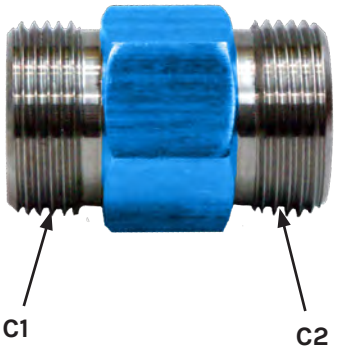

TYPE M MALE TO METRIC MALE ADAPTERS

Stainless steel. Copper plated for galling resistance.

PART NO.	CONNECTION TYPE		MAX. OPERATING PRESSURE	
	CONNECTION 1	CONNECTION 2	psi	bar
66560	1-5/16" Type M Male	M36 x 2.0 Male	15,000	1034

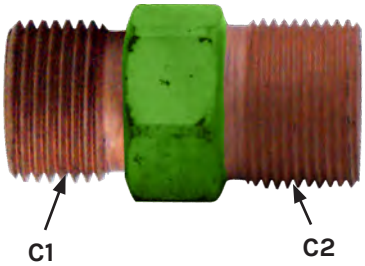

TYPE M MALE TO MEDIUM PRESSURE MALE CONNECTORS

Stainless steel.

PART NO.	CONNECTION TYPE		MAX. OPERATING PRESSURE	
	CONNECTION 1	CONNECTION 2	psi	bar
28330	1-5/16" Type M Male	1" MP Male	20,000	1379
28786	1-5/16" Type M Male	3/4" MP Male	20,000	1379
28299	1-5/16" Type M Male	9/16" MP Male	20,000	1379
28433	1" Type M Male	1" MP Male	20,000	1379
28629	1" Type M Male	3/4" MP Male	20,000	1379
28631	1" Type M Male	9/16" MP Male	20,000	1379
29063	3/4" Type M Male	1" MP Male	20,000	1379
29064	3/4" Type M Male	3/4" MP Male	20,000	1379
28350	3/4" Type M Male	9/16" MP Male	20,000	1379
29065	3/4" Type M Male	3/8" MP Male	20,000	1379
29066	9/16" Type M Male	1" MP Male	20,000	1379
28804	9/16" Type M Male	3/4" MP Male	20,000	1379
28193	9/16" Type M Male	9/16" MP Male	20,000	1379
28192	9/16" Type M Male	3/8" MP Male	20,000	1379
28328	9/16" Type M Male	1/4" MP Male	20,000	1379

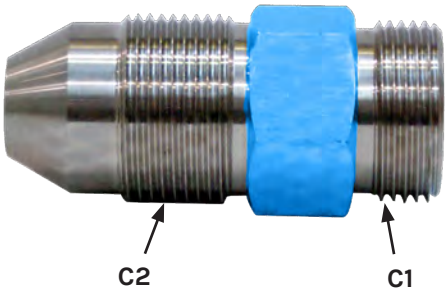

JETSTREAM HF MALE ADAPTERS

The Jetstream HF connection features an easily replaceable seal to prevent wear or damage to the manifold and a large bore to minimize pressure drop through fittings. Stainless steel. Copper plated for galling resistance.

JETSTREAM HF MALE TO PIPE THREAD MALE (NPT) ADAPTERS

PART NO.	CONNECTION TYPE		MAX. OPERATING PRESSURE	
	CONNECTION 1	CONNECTION 2	psi	bar
60953	Jetstream HF Male	3/4" NPT Male	15,000	1034

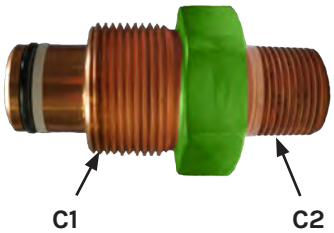

JETSTREAM HF MALE TO TYPE M MALE ADAPTERS

PART NO.	CONNECTION TYPE		MAX. OPERATING PRESSURE	
	CONNECTION 1	CONNECTION 2	psi	bar
60952	Jetstream HF Male	1-5/16" Type M Male	15,000	1034

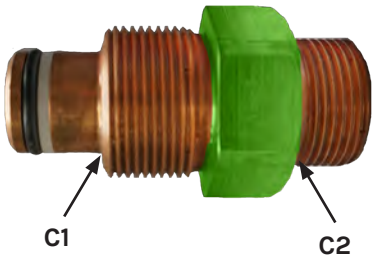

JETSTREAM HF MALE TO FEMALE NPT ADAPTERS

PART NO.	CONNECTION TYPE		MAX. OPERATING PRESSURE	
	CONNECTION 1	CONNECTION 2	psi	bar
60954	Jetstream HF Male	1/2" NPT Female	15,000	1034
63089	Jetstream HF Male	3/4" NPT Female	15,000	1034

JETSTREAM HF MALE PLUG

PART NO.	CONNECTION TYPE	MAX. OPERATING PRESSURE	
		psi	bar
60951	Jetstream HF Male	15,000	1034

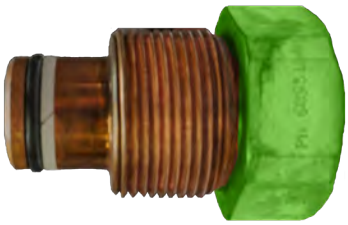

JETSTREAM HF MALE TO METRIC MALE ADAPTER

PART NO.	CONNECTION TYPE		MAX. OPERATING PRESSURE	
	CONNECTION 1	CONNECTION 2	psi	bar
62284	Jetstream HF Male	M36 x 2.0 Male	15,000	1034
63576	Jetstream HF Male	M24 x 1.5 Male	15,000	1034

JETSTREAM HF CLOCKABLE ADAPTER FITTINGS

PART NO.	CONNECTION TYPE		MAX. OPERATING PRESSURE	
	CONNECTION 1	CONNECTION 2	psi	bar
60955	Jetstream HF Male	1/2" NPT Female straight	15,000	1034
61823	Jetstream HF Male	3/4" NPT Female angle	15,000	1034

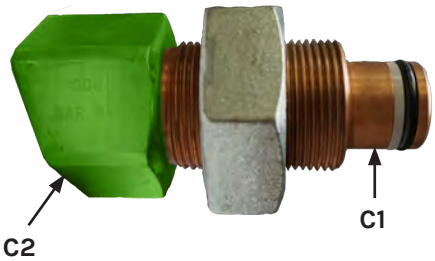

REPLACEMENT PARTS

Part No. 25238 O-Ring

Part No. 60897 Backup Ring

JETSTREAM HHP MALE ADAPTERS

The Jetstream HHP connection features an easily replaceable seal to prevent wear or damage to the manifold and a large bore to minimize pressure drop through fittings. Stainless steel. Copper plated for galling resistance.

JETSTREAM HHP MALE TO PIPE THREAD MALE (NPT) ADAPTERS

PART NO.	CONNECTION TYPE		MAX. OPERATING PRESSURE	
	CONNECTION 1	CONNECTION 2	psi	bar
56861	Jetstream HHP Male	1" NPT Male	15,000	1034
56863	Jetstream HHP Male	1" NPT Male	15,000	1034
56862	Jetstream HHP Male	3/4" NPT Male	15,000	1034

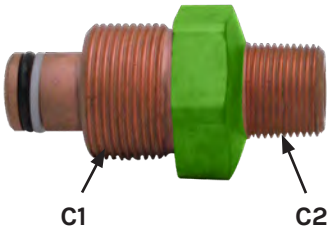

JETSTREAM HHP MALE TO TYPE M MALE ADAPTERS

PART NO.	CONNECTION TYPE		MAX. OPERATING PRESSURE	
	CONNECTION 1	CONNECTION 2	psi	bar
54844	Jetstream HHP Male	1-5/16" Type M Male	20,000	1379
55296	Jetstream HHP Male	1" Type M Male	20,000	1379

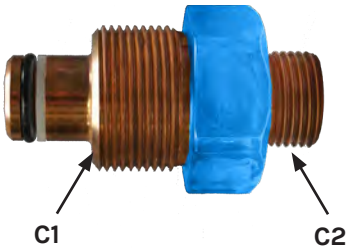

JETSTREAM HHP MALE TO MEDIUM PRESSURE FEMALE ADAPTERS

PART NO.	CONNECTION TYPE		MAX. OPERATING PRESSURE	
	CONNECTION 1	CONNECTION 2	psi	bar
54846	Jetstream HHP Male	1" MP Female	20,000	1379
62289	Jetstream HHP Male	9/16" MP Female	20,000	1379

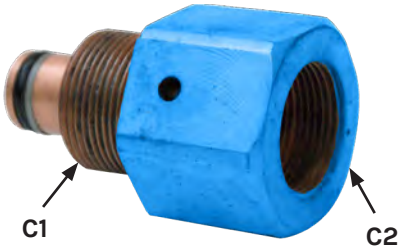

JETSTREAM HHP MALE PLUG

PART NO.	CONNECTION TYPE	MAX. OPERATING PRESSURE	
		psi	bar
54847	Jetstream HHP Male	20,000	1379

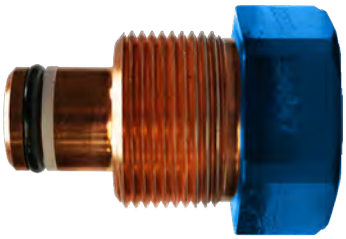

REPLACEMENT PARTS

Part No. 26523 O-Ring Part No. 54854 Backup Ring

JETSTREAM HHP MALE TO METRIC MALE ADAPTER

PART NO.	CONNECTION TYPE		MAX. OPERATING PRESSURE	
	CONNECTION 1	CONNECTION 2	psi	bar
61503	Jetstream HHP Male	M36 x 2.0 Male	15,000	1034
63575	Jetstream HHP Male	M24 x 1.5 Male	15,000	1034

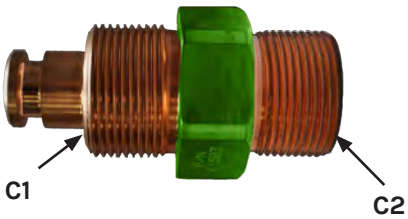

JETSTREAM HHP MALE TO BSPP MALE ADAPTER

PART NO.	CONNECTION TYPE		MAX. OPERATING PRESSURE	
	CONNECTION 1	CONNECTION 2	psi	bar
61322	Jetstream HHP Male	G 3/4" BSPP Male	15,000	1034

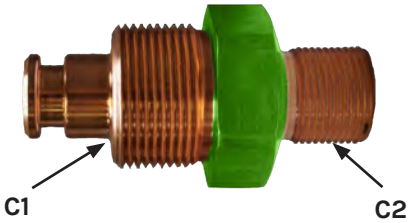

JETSTREAM HHP MALE TO METRIC FEMALE ADAPTER

PART NO.	CONNECTION TYPE		MAX. OPERATING PRESSURE	
	CONNECTION 1	CONNECTION 2	psi	bar
54938	Jetstream HHP Male	.56 Rigid Lance Female	20,000	1379

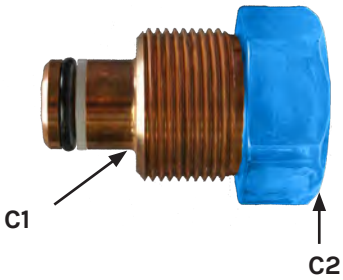

JETSTREAM HHP ADAPTER FITTINGS

PART NO.	CONNECTION TYPE		MAX. OPERATING PRESSURE	
	CONNECTION 1	CONNECTION 2	psi	bar
62288	Jetstream HHP Male	20K Port Female	20,000	1379

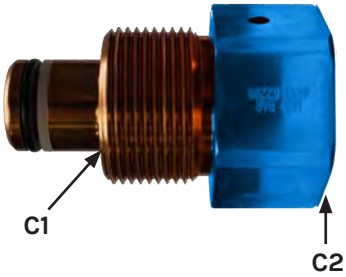

JETSTREAM HHP CLOCKABLE ADAPTER FITTINGS

PART NO.	CONNECTION TYPE		MAX. OPERATING PRESSURE	
	CONNECTION 1	CONNECTION 2	psi	bar
62741	Jetstream HHP Male	3/4" MP Female angled	20,000	1379

MEDIUM PRESSURE CONNECTIONS

MEDIUM PRESSURE CROSSES

All medium pressure crosses include gland nuts and collars. Stainless steel.

PART NO.	CONNECTION TYPE	MAX. OPERATING PRESSURE	
		psi	bar
28301	1" MP Female	20,000	1379
29067	3/4" MP Female	20,000	1379
27969	9/16" MP Female	20,000	1379
29068	3/8" MP Female	20,000	1379
29069	1/4" MP Female	20,000	1379

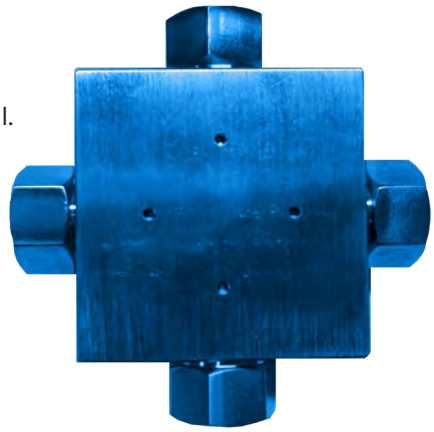

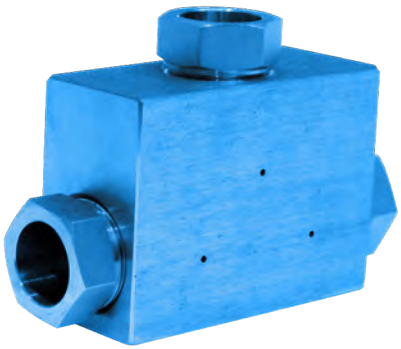

MEDIUM PRESSURE TEES

All medium pressure tees include gland nuts and collars. Stainless steel.

PART NO.	CONNECTION TYPE	MAX. OPERATING PRESSURE	
		psi	bar
29070	1" MP Female	20,000	1379
29071	3/4" MP Female	20,000	1379
27966	9/16" MP Female	20,000	1379
27964	3/8" MP Female	20,000	1379
29072	1/4" MP Female	20,000	1379

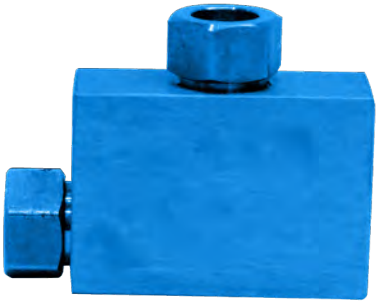

MEDIUM PRESSURE ELBOWS

All medium pressure elbows include gland nuts and collars. Stainless steel.

PART NO.	CONNECTION TYPE	MAX. OPERATING PRESSURE	
		psi	bar
29073	1" MP Female	20,000	1379
29074	3/4" MP Female	20,000	1379
28184	9/16" MP Female	20,000	1379
27997	3/8" MP Female	20,000	1379
29075	1/4" MP Female	20,000	1379

MEDIUM PRESSURE STRAIGHT COUPLINGS

All medium pressure straight couplings include gland nuts and collars. Stainless steel.

PART NO.	CONNECTION TYPE		MAX. OPERATING PRESSURE	
	CONNECTION 1	CONNECTION 2	psi	bar
28341	1" MP Female	1" MP Female	20,000	1379
29076	1" MP Female	3/4" MP Female	20,000	1379
29077	1" MP Female	9/16" MP Female	20,000	1379
28382	3/4" MP Female	3/4" MP Female	20,000	1379
29078	3/4" MP Female	9/16" MP Female	20,000	1379
29079	3/4" MP Female	3/8" MP Female	20,000	1379
27009	9/16" MP Female	9/16" MP Female	20,000	1379
28189	9/16" MP Female	3/8" MP Female	20,000	1379
28188	9/16" MP Female	1/4" MP Female	20,000	1379
28185	3/8" MP Female	3/8" MP Female	20,000	1379
28187	3/8" MP Female	1/4" MP Female	20,000	1379
29080	1/4" MP Female	1/4" MP Female	20,000	1379

MEDIUM PRESSURE UNION COUPLINGS

Union couplings feature a removable seat insert that allows the fitting to slip over one end of the tubing for ease of installation in confined spaces or rigid piping applications. Stainless steel. All medium pressure union couplings include gland nuts and collars.

PART NO.	CONNECTION TYPE	MAX. OPERATING PRESSURE	
		psi	bar
29081	1" MP Female	20,000	1379
29082	3/4" MP Female	20,000	1379
29083	9/16" MP Female	20,000	1379
29084	3/8" MP Female	20,000	1379
29119	1/4" MP Female	20,000	1379

MEDIUM PRESSURE MALE CONNECTORS

Stainless steel.

PART NO.	CONNECTION TYPE		MAX. OPERATING PRESSURE	
	CONNECTION 1	CONNECTION 2	psi	bar
29085	1" MP Male	1" MP Male	20,000	1379
29086	1" MP Male	3/4" MP Male	20,000	1379
29087	1" MP Male	9/16" MP Male	20,000	1379
29088	3/4" MP Male	3/4" MP Male	20,000	1379
29089	3/4" MP Male	9/16" MP Male	20,000	1379
29090	3/4" MP Male	3/8" MP Male	20,000	1379
29715	3/4" MP Male	1/4" MP Male	20,000	1379
29091	9/16" MP Male	9/16" MP Male	20,000	1379
29092	9/16" MP Male	3/8" MP Male	20,000	1379
29093	9/16" MP Male	1/4" MP Male	20,000	1379
28191	3/8" MP Male	3/8" MP Male	20,000	1379
28190	3/8" MP Male	1/4" MP Male	20,000	1379
29094	1/4" MP Male	1/4" MP Male	20,000	1379

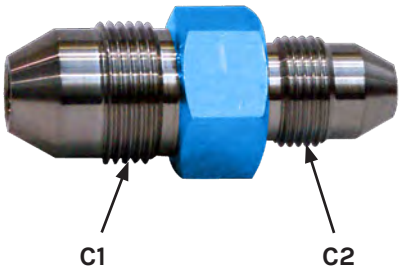

MEDIUM PRESSURE MALE TO MEDIUM PRESSURE FEMALE CONNECTORS

Stainless steel.

PART NO.	CONNECTION TYPE		MAX. OPERATING PRESSURE	
	CONNECTION 1	CONNECTION 2	psi	bar
29095*	1" MP Male	3/4" MP Female	20,000	1379
28797*	1" MP Male	9/16" MP Female	20,000	1379
28462*	3/4" MP Male	9/16" MP Female	20,000	1379
29096*	3/4" MP Male	3/8" MP Female	20,000	1379
28186*	9/16" MP Male	3/8" MP Female	20,000	1379
28726*	9/16" MP Male	1/4" MP Female	20,000	1379
29097*	3/8" MP Male	1/4" MP Female	20,000	1379

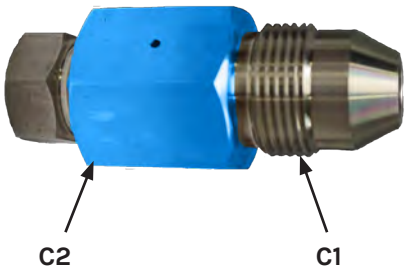

MEDIUM PRESSURE NIPPLES

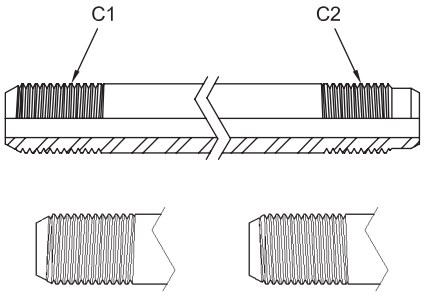

High tensile strength, cold drawn stainless steel. Glands and collars not included.

Left-hand Medium Pressure Tubing (MP Tube LH):

For use in standard medium pressure connections (using glands and collars) or with lance fittings (no glands and collars) or tube nozzles that have medium pressure, left-handed female threads. Available in 1/4" to 1" sizes.

Right-hand Medium Pressure Tubing (MP Tube RH):

For use with lance fittings (no glands and collars) or tube nozzles that have medium pressure, right-handed female threads. Available in 1/4" to 3/4" sizes.

PART NO.	CONNECTIONS		OUTER DIAMETER		INNER DIAMETER		MAX. WORKING PRESSURE	
	CONNECTION 2	CONNECTION 2	in	mm	in	mm	psi	bar
29013-XX	1" MP Tube LH Male	1" MP Tube LH Male	.990	25.1	.688	17.5	20,000	1379
29108-XX	3/4" MP Tube LH Male	3/4" MP Tube LH Male	.740	18.8	.438	11.1	20,000	1379
29109-XX	3/4" MP Tube LH Male	3/4" MP Tube RH Male	.740	18.8	.438	11.1	20,000	1379
29110-XX	3/4" MP Tube RH Male	3/4" MP Tube RH Male	.740	18.8	.438	11.1	20,000	1379
27968-XX	9/16" MP Tube LH Male	9/16" MP Tube LH Male	.553	14.0	.312	7.9	20,000	1379
54769-XX	9/16" MP Tube LH Male	9/16" MP Tube RH Male	.553	14.0	.312	7.9	20,000	1379
54781-XX	9/16" MP Tube RH Male	9/16" MP Tube RH Male	.553	14.0	.312	7.9	20,000	1379
27960-XX	3/8" MP Tube LH Male	3/8" MP Tube LH Male	.368	9.3	.203	5.2	20,000	1379
54783-XX	3/8" MP Tube LH Male	3/8" MP Tube RH Male	.368	9.3	.203	5.2	20,000	1379
54784-XX	3/8" MP Tube RH Male	3/8" MP Tube RH Male	.368	9.3	.203	5.2	20,000	1379
54787-XX	1/4" MP Tube LH Male	1/4" MP Tube LH Male	.245	6.2	.109	2.8	20,000	1379
54788-XX	1/4" MP Tube LH Male	1/4" MP Tube RH Male	.245	6.2	.109	2.8	20,000	1379
54789-XX	1/4" MP Tube RH Male	1/4" MP Tube RH Male	.245	6.2	.109	2.8	20,000	1379

MEDIUM PRESSURE GLAND NUTS, COLLARS AND PLUGS

Gland Nut

Plug

Collar

CONNECTION TYPE	REPLACEMENT PART NO.		
	GLAND NUT	COLLAR	PLUG
1" MP Male	28731	28732	29100
3/4" MP Male	28383	28384	29101
9/16" MP Male	26645	26635	27973
3/8" MP Male	28181	28180	28229
1/4" MP Male	29098	29099	29102

MEDIUM PRESSURE ANTI-VIBRATION GLAND ASSEMBLIES

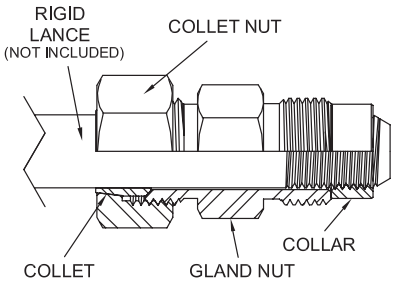

Used to reduce stress on tubing threads in conditions where bending or vibration are present, anti-vibration gland assemblies feature a collet that clamps onto the tubing when the connection is tightened to provide extra support and strength.

ASSEMBLY PART NO.	CONNECTION TYPE	COLLAR PART NUMBER	GLAND NUT ASSY PART NUMBER
29103	1" MP Male	28732	61539
29104	3/4" MP Male	28384	61540
28268	9/16" MP Male	26635	61541
29105	3/8" MP Male	28180	61542
29106	1/4" MP Male	29099	61543

MEDIUM PRESSURE SLIMLINE LANCE COUPLINGS

Used to couple medium pressure rigid and flex lances without the use of glands and collars, allowing them to fit into tubes.

Additional couplings available by request.

PART NO.	CONNECTIONS		OUTER DIAMETER		MAX. WORKING PRESSURE	
	CONNECTION 2	CONNECTION 2	in	mm	psi	bar
28668	9/16" MP Tube LH Female	9/16" MP Tube LH Female	.750	19.1	20,000	1379
29111	9/16" MP Tube LH Female	9/16" MP Tube RH Female	.750	19.1	20,000	1379
29112	9/16" MP Tube RH Female	9/16" MP Tube RH Female	.750	19.1	20,000	1379
28349	9/16" MP Tube LH Female	3/8" MP Tube LH Female	.750	19.1	20,000	1379
28314	9/16" MP Tube RH Female	3/8" MP Tube RH Female	.750	19.1	20,000	1379
28667	3/8" MP Tube LH Female	3/8" MP Tube LH Female	.500	12.7	20,000	1379
29113	3/8" MP Tube LH Female	3/8" MP Tube RH Female	.500	12.7	20,000	1379
29114	3/8" MP Tube RH Female	3/8" MP Tube RH Female	.500	12.7	20,000	1379
28315	3/8" MP Tube RH Female	1/4" MP Tube RH Female	.500	12.7	20,000	1379
28666	1/4" MP Tube LH Female	1/4" MP Tube LH Female	.375	9.5	20,000	1379
28700	1/4" MP Tube LH Female	1/4" MP Tube RH Female	.375	9.5	20,000	1379
29115	1/4" MP Tube RH Female	1/4" MP Tube RH Female	.375	9.5	20,000	1379

ROTOLINK™

RotoLink™ series swivels are compact rotary couplings designed to deliver high pressure water from a stationary line to a rotating or twisting assembly. These durable swivels are ideal for preventing hose kink and can be used in a variety of applications including floor cleaners, lance machines, hose reels, and shot guns. A variety of inlet options and configurations are available.

RotoLinks are easily maintained in the field using available wear kits that contain a high pressure seal, seat, and spring (if required). Rebuild kits include all the components in the wear kit, along with bearings and lip seals needed to completely overhaul the coupling.

SERIES	TYPICAL APPLICATIONS
JSG	Rotating manifold and nozzle assemblies can be mounted to output shaft. The swivel is also used on hose reels and connecting high pressure hose to a maneuverable jet. Commonly used in powered rotary surface cleaners, large hose reels, and automated surface cleaning systems.
JSH	Used as a swiveling connection between high pressure hose and a shotgun or on small hose reel devices. The swivel can be installed between a tool's inlet connection and the high pressure hose to prevent hose twist and ease handling.
JSL	Standard on rigid lance machines or used as an inlet swivel to a handgun.
JSM	Intended for use where an external motor/gearbox supplies power for rotation. These are also used on hose reels or where a hose connects to an assembly to aid in hose handling.

PART NO.	SERIES	INLET CONNECTION TYPE*	INLET ANGLE (DEG)	SHAFT	WEAR KIT	REBUILD KIT	MAX. OPERATING PRESSURE	
							psi	bar
66658	JSL	1/2" NPT	0	1/4" NPT	66752	67521	15,000	1034
66659	JSH	1/2" NPT	0	1/2" NPT	66753	67520		
66660	JSG	1/2" NPT	0	1/2" NPT	66754	67519		
66661	JSM	1" NPT	0	1" NPT, KEY	66757	67524	12,000	827
67450	JSL	1/2" NPT	90	1/4" NPT	66752	67521	15,000	1034
67451	JSH	1/2" NPT	90	1/2" NPT	66753	67520		
67452	JSG	1/2" NPT	90	1/2" NPT	66754	67519		
67453	JSM	1" NPT	90	1" NPT, KEY	66757	67524	12,000	827
67454	JSM	1" NPT	90	1" NPT	66757	67524		
67455	JSM	1" NPT	0	1" NPT	66757	67524		

*See details on all connection types in Section I.

JSG SERIES
Part No. 66660

JSH SERIES
Part No. 66659

JSL SERIES
Part No. 66658

JSM SERIES
Part No. 66661

FITTINGS

CONTROL GUNS

HAND-OPERATED, ZERO-THRUST AND FOOT-OPERATED

Control guns are a necessity in any hand lancing application. Jetstream offers several control gun styles for 15,000 psi waterblasting: Standard and Field-Repairable Hand Guns, Zero-Thrust (or Sub-Sea) Guns and several Foot-operated gun options for various cleaning needs.

DURASAFE™ HAND GUNS

(STANDARD AND FIELD-REPAIRABLE)

Designed with safety, comfort and simplicity in mind, the 15,000 psi control guns are used for a variety of surface cleaning applications. The DCP models feature fully adjustable body pads for maximum operator comfort in any position (shoulder, hip, chest, etc.). The DCPx models showcase an ergonomically designed shoulder stock. In addition to the standard welded guns, Jetstream offers a field repairable option for barrel replacement to be performed in the field. Both standard and field repairable guns are offered in single or dual trigger, dump or shut-in style. All guns are color-coded in green for the 15,000 psi (1034 bar) rating.

ZERO-THRUST GUN

The Zero-Thrust gun is primarily designed for underwater cleaning in a marine environment. Due to no rear thrust, the operator is able to sustain a standard distance from the material needed to be cleaned without being propelled away.

DURASAFE™ FOOT GUNS

The Durasafe foot gun is ideal for numerous tube cleaning applications. A recent upgrade is the larger opening for easier boot clearance and is now standard on all Jetstream foot guns. Both dump or shut-in style come standard in green color for 15,000 psi (1034 bar).

- Fast field replaceable cartridge design for minimal downtime
- All pressure bearing components are stainless steel

DURASAFE™ HAND GUNS

DUMP STYLE

DuraSafe 15,000 psi hand-operated dump style control guns allow the operator to have complete control of the pressure at all times. Designed with safety, comfort, and simplicity in mind, they are used for a variety of surface cleaning applications and are available in four standard configurations.

- 30-second field replaceable cartridge design for minimal downtime
- 48" distance from primary trigger to end of barrel to ensure maximum operator safety
- Lightweight
- Special cam-operated design cuts required trigger force in half
- DCP models feature fully adjustable body pad for maximum operator comfort in any position (shoulder, hip, chest, etc.), while an ergonomically designed shoulder stock is included with DCPx models
- Adjustable secondary grip included with single trigger models
- Dual trigger models require both triggers to be engaged in order to build system pressure for maximum operator safety
- All pressure-bearing components are stainless steel
- Includes coupling to attach 1/4" NPT Male nozzles (see HHTC Nozzles, page G-47)
- All Jetstream Hand Guns are color-coded green for added safety at 15,000 psi (1034 bar). See parts lists on the following pages for part numbers of replacement decals for the front barrel, rear barrel, and body.

REPLACEMENT CARTRIDGE

All 15,000 psi DuraSafe Dump Style Control Guns utilize the C-15 cartridge, shown above, to completely rebuild the dump valve in about 30 seconds!
Part No. 50902

GUNS

STANDARD, WELDED

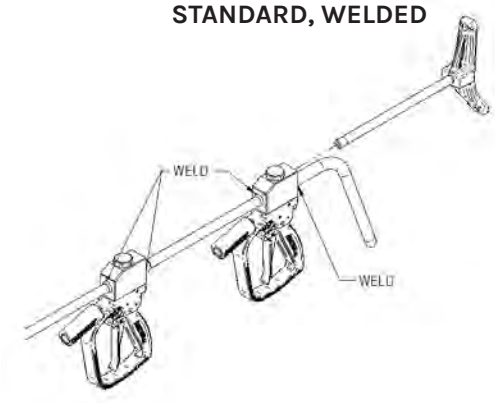

PARTIALLY FIELD REPAIRABLE

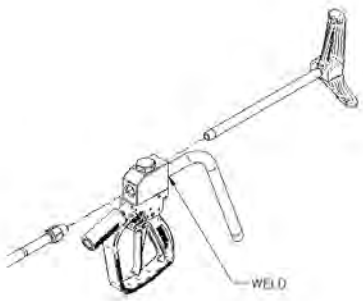

FULLY FIELD REPAIRABLE

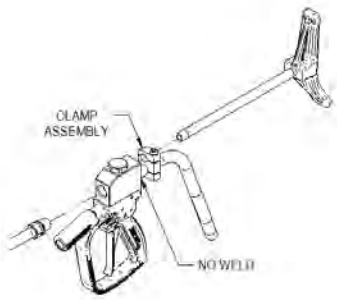

NOTE: The Jetstream PI082 Safety Pamphlet Section 'CONTROL GUNS AND DEVICES' Item 5:

The use of a Safety Shroud and Safety Whip Hose with handheld control guns is strongly recommended for additional operator protection against a burst occuring in the high pressure hose connected to the gun. Use of Hand Grip and Shoulder Stock in hand-held control guns will provide greater operator comfort and safety.

DURASAFE™ HAND GUNS
DUMP STYLE
STANDARD, WELDED GUN

PART NO.	MODEL	TRIGGER ACTUATION	REST TYPE	INLET CONNECTION*	BARREL SIZE	LENGTH		MAX. OPERATING PRESSURE	
						in	mm	psi	bar
53300	DCP-15	Single	Body Pad	1/2" NPT Male	3/8" NPT	71	1803	15,000	1034
54605	DCPx-15	Single	Shoulder Stock			66	1676	15,000	1034
53225	DCP-15DD	Dual	Body Pad			75	1905	15,000	1034
54415	DCPx-15D	Dual	Shoulder Stock			70	1778	15,000	1034

*Adapters available for other connection types. See details on all connection types in Section I.

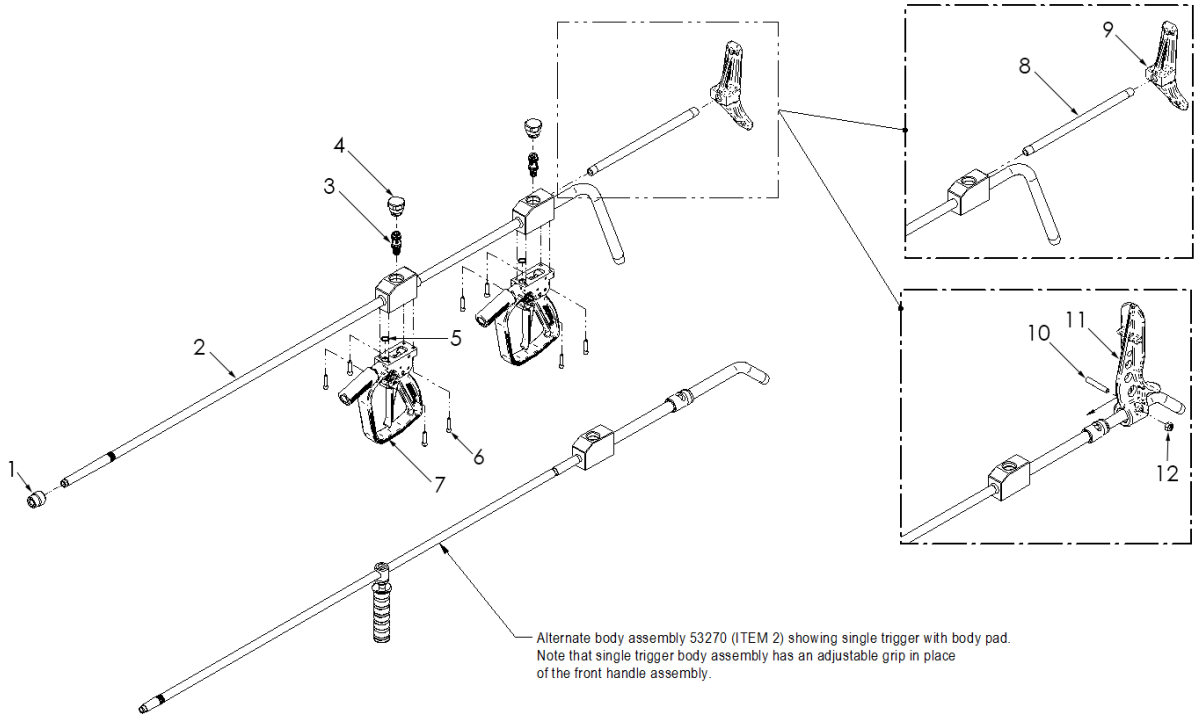

PART BREAKDOWN

ITEM	PART NO.	DESCRIPTION	ITEM	PART NO.	DESCRIPTION
1	26061	Coupling	8	50127	Extension, Shoulder Stock (54605, 54415)
2	53270	Body Assy (53330)	9	65808	Shoulder Stock (54605, 54415)
	54360	Body Assy (54605)	10	53303	Stud (53300, 53225)
	53240	Body Assy (53225)	11	53304	Body Pad (53300, 53225)
	54420	Body Assy (54415)	12	25296	Nut (53300, 53225)
3	50902	Cartridge	13*	65998	Decal, Front Barrel, Green
4	53175	Plug	14*	64266	Decal, Rear Barrel, Green
5	25193	O-Ring	15*	71742	Decal, Body Green
6	26689	Capscrew	16*	66332	Cushion. Shoulder Stock (54605, 54415)
7	57956-66	Handle Assy, Green			

*Not shown.

DURASAFE™ HAND GUNS
DUMP STYLE
PARTIALLY FIELD REPAIRABLE GUN

PART NO.	MODEL	TRIGGER ACTUATION	REST TYPE	INLET CONNECTION*	BARREL SIZE	LENGTH		MAX. OPERATING PRESURE	
						in	mm	psi	bar
53345	DCP-15	Single	Body Pad	1/2" NPT Male	1/2" NPT	66	1676	15,000	1034
54900	DCPx-15	Single	Shoulder Stock		3/8" NPT	67	1702	15,000	1034

* Adapters available for other connection types. See details on all connection types in Section I.

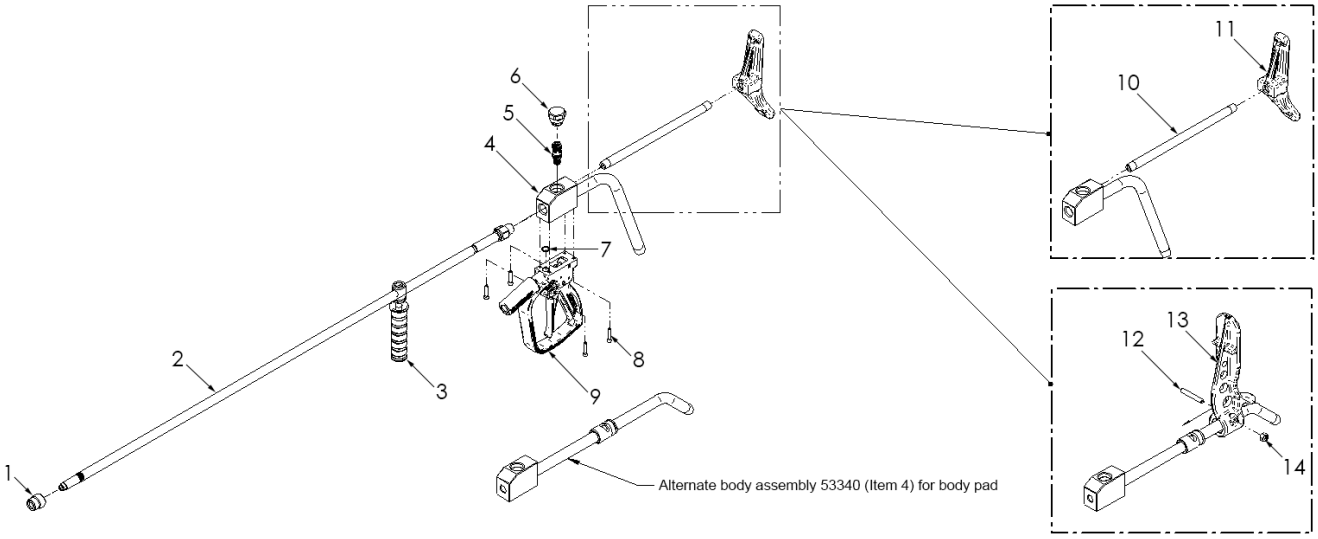

PART BREAKDOWN

ITEM	PART NO.	DESCRIPTION	ITEM	PART NO.	DESCRIPTION
1	26061	Coupling	10	50127	Extension, Shoulder Stock (54900)
2	51973	Barrel, Front	11	65808	Shoulder Stock (54900)
3	52198	Grip Assy	12	53303	Stud (53345)
4	53340	Body Assy (53345)	13	53304	Body Pad (53345)
	54705	Body Assy (54900)	14	25296	Nut (53345)
5	50902	Cartridge	15*	65998	Decal, Front Barrel, Green
6	53175	Plug	16*	64266	Decal, Rear Barrel, Green
7	25193	O-Ring	17*	71742	Decal, Body Green
8	26689	Capscrew	18*	66332	Cushion, Should Stock (54900)
9	57956-66	Handle Assy, Green			

*Not shown.

DURASAFE™ HAND GUNS
DUMP STYLE
FIELD REPAIRABLE, SINGLE TRIGGER GUN

PART NO.	MODEL	TRIGGER ACTUATION	REST TYPE	INLET CONNECTION*	BARREL SIZE	LENGTH		MAX. OPERATING PRESURE	
						in	mm	psi	bar
65745	FR-15SD	Single	Shoulder Stock	1/2" NPT Male	3/8" NPT	67	1702	15,000	1034
65739	FR-15SD	Single	Shoulder Stock		1/2" NPT	66	1676	15,000	1034

* Adapters available for other connection types. See details on all connection types in Section I.

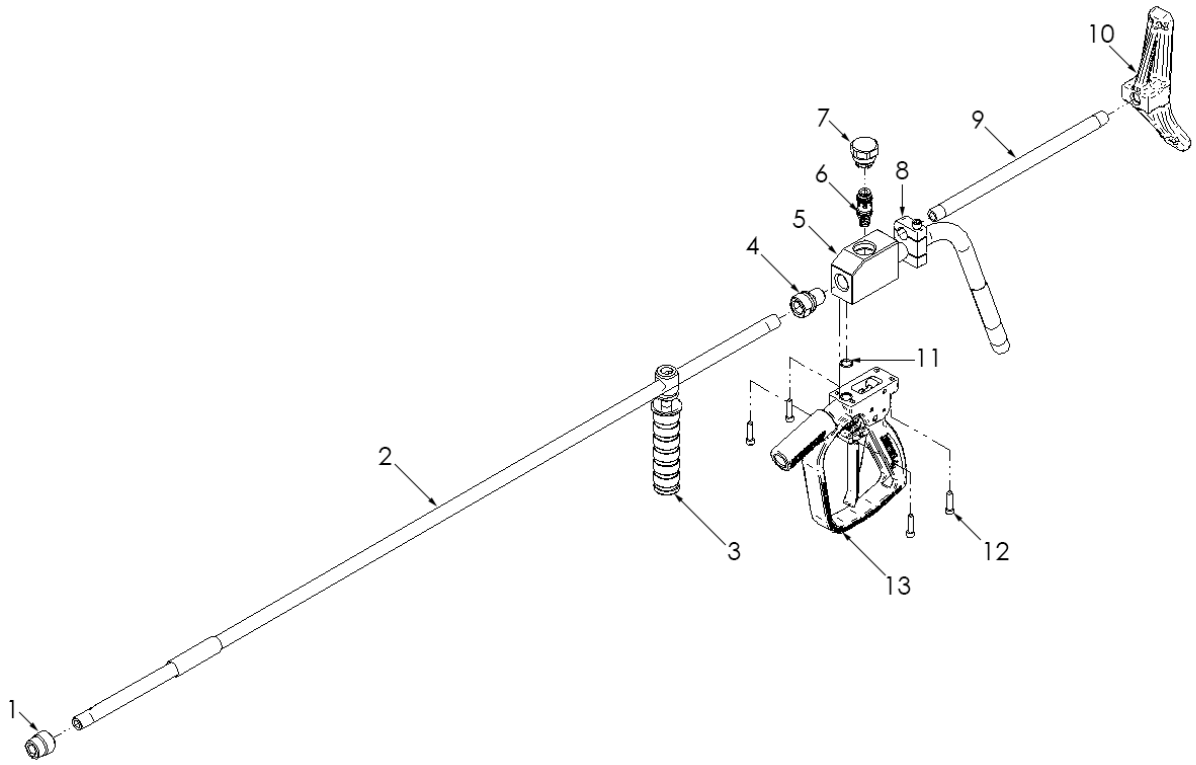

PART BREAKDOWN

ITEM	PART NO.	DESCRIPTION	ITEM	PART NO.	DESCRIPTION
1	26061	Coupling (65745)	8	61880	Clamp
	50342	Coupling (65739)	9	50127	Extension, Shoulder Stock
2	51098-48	Barrel, Front (65745)	10	65808	Shoulder Stock
	55450-48	Barrel, Front (65739)	11	25193	O-Ring
3	52198	Grip Assy (65745)	12	26689	Capscrew
	04210	Grip Assy (65739)	13	57956-66	Handle Assy, Green
4	26062	Bushing (65745)	14*	65998	Decal, Front Barrel, Green
5	65741	Body Assy, DCP-15	15*	64266	Decal, Rear Barrel, Green
6	50902	Cartridge	16*	71742	Decal, Body Green
7	53175	Plug	17*	66332	Cushion, Shoulder Stock

*Not shown.

DURASAFE™ HAND GUNS
DUMP STYLE
FIELD REPAIRABLE, DUAL TRIGGER GUNS

PART NO.	MODEL	TRIGGER ACTUATION	REST TYPE	INLET CONNECTION*	BARREL SIZE	LENGTH		MAX. OPERATING PRESURE	
						in	mm	psi	bar
65746	FR-15DD	Dual	Shoulder Stock	1/2" NPT Male	3/8" NPT	78	1981	15,000	1034
65740	FR-15DD	Dual	Shoulder Stock		1/2" NPT	77	1956	15,000	1034

* Adapters available for other connection types. See details on all connection types in Section I.

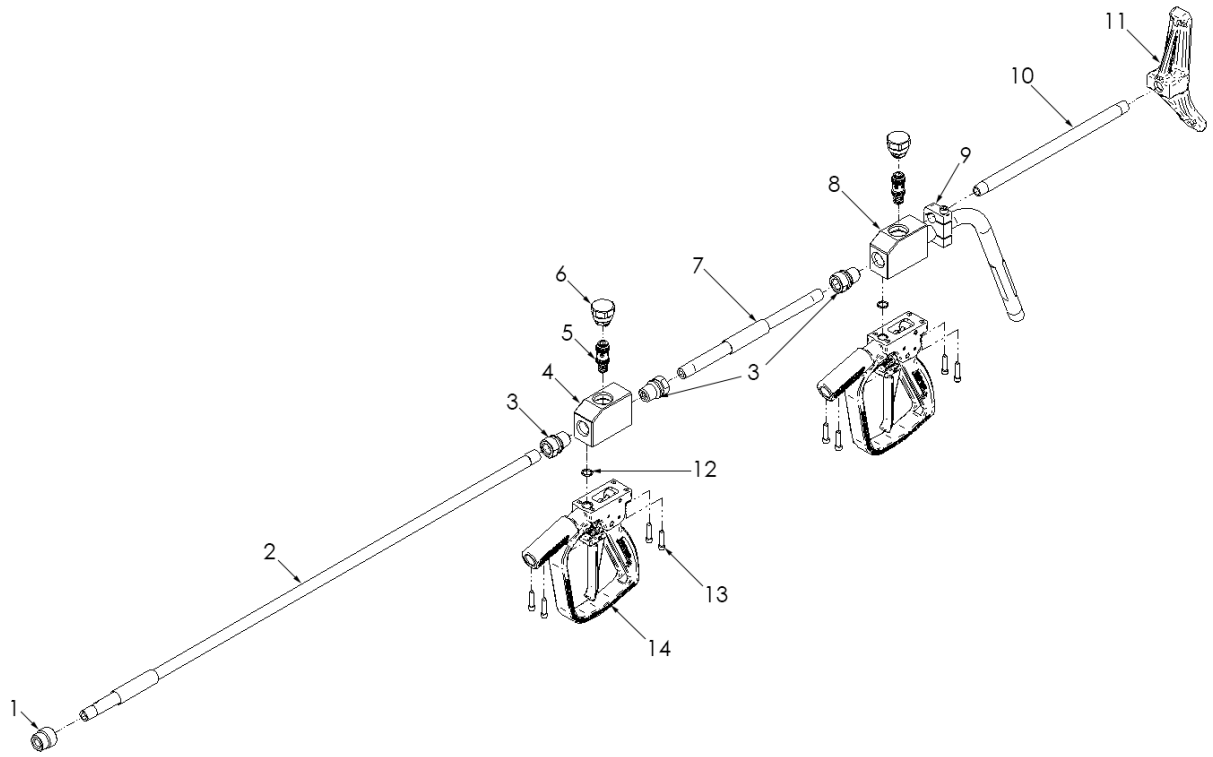

PART BREAKDOWN

ITEM	PART NO.	DESCRIPTION	ITEM	PART NO.	DESCRIPTION
1	26061	Coupling (65746)	9	61880	Clamp
	50342	Coupling (65740)	10	50127	Extension, Shoulder Stock
2	51098-36	Barrel, Front (65746)	11	65808	Shoulder Stock
	55450-36	Barrel, Front (65740)	12	25193	O-Ring
3	26062	Bushing (65746)	13	26689	Capscrew
4	55497	Body, DCP-15	14	57956-66	Handle Assy, Green
5	50902	Cartridge	15*	65998	Decal, Front Barrel, Green
6	53175	Plug	16*	64266	Decal, Rear Barrel, Green
7	51098-11	Nipple (65746)	17*	71742	Decal, Body Green
	55450-11	Nipple (65740)	18*	66332	Cushion, Shoulder Stock
8	65741	Body Assy. DCP-15			

*Not shown.

ZERO-THRUST HAND GUNS

The Zero-Thrust gun is primarily designed for underwater cleaning in a marine environment. The gun uses two 1/4" nozzles, one facing forward and one installed in the rear adapter (item 9), to neutralize thrust. Due to no thrust, the operator is able to sustain a standard distance from the material needed to be cleaned without being propelled away. **Part No. 57066**

PART NO.	MODEL	TRIGGER ACTUATION	REST TYPE	INLET CONNECTION*	BARREL SIZE	LENGTH		MAX. OPERATING PRESSURE	
						in	mm	psi	bar
57066	ZT-15	Single	None	1/2" NPT Male	3/8" NPT	85	2159	15,000	1034

*Adapters available for other connection types. See details on all connection types in Section I.

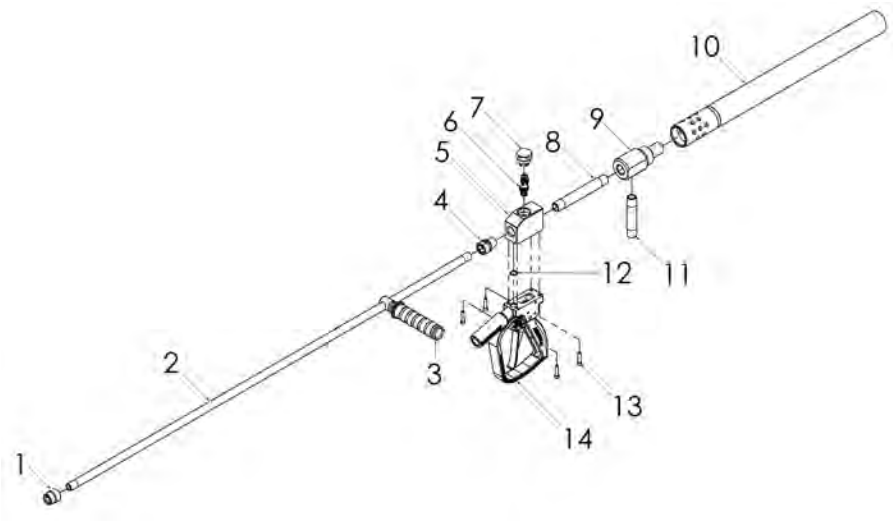

REPLACEMENT CARTRIDGE

Zero Thrust Hand Gun utilizes a cartridge, shown above, to completely rebuild in about 30 seconds. **Part No. 50902**

GUNS

PART BREAKDOWN

ITEM	PART NO.	DESCRIPTION	ITEM	PART NO.	DESCRIPTION
1	26061	Coupling	10	50511	Baffle Tube
2	51098-48	Nipple, Front Barrel	11	55450-04	Nipple
3	52198	Grip Adjuster	12	25193	O-Ring
4	26062	Bushing	13	26689	Capscrew
5	55497	Body	14	57956-66	Handle Assy, Green
6	50902	Cartridge	15*	65998	Decal, Front Barrel, Green
7	53175	Plug	16*	64266	Decal, Rear Barrel, Green
8	55450-06	Nipple	17*	71742	Decal, Body Green
9	57076	Adapter, Baffle Tube			

*Not shown.

NOTE: The Jetstream PI082 Safety Pamphlet Section 'CONTROL GUNS AND DEVICES' Item 5:

The use of a Safety Shroud and Safety Whip Hose with handheld control guns is strongly recommended for additional operator protection against a burst occuring in the high pressure hose connected to the gun. User of Hand Grip and Shoulder Stock in hand-held control guns will provide greater operator comfort and safety.

DURASAFE™ HAND GUNS

SHUT-IN STYLE

DuraSafe 15,000 psi hand-operated shut-in style control guns allow the operator to have complete control of the pressure at all times. Designed with safety, comfort, and simplicity in mind, they are used for a variety of surface cleaning applications and are available in two standard configurations.

- Shut-in style control guns do not dump water when the trigg er is released. Useful in applications where excess water spillage and disposal are concerns. Use with plunger style pumps, such as the UNx®, requires the installation of a Shut-In Regulator Valve (see page C-18).
- 30-second field replaceable cartridge design for minimal downtime
- 48″ distance primary trigger to end of barrel to ensure maximum operator safety
- All Jetstream Hand Guns are color-coded green for added safety at 15,000 psi (1,034 bar)
- Special cam-operated design cuts required trigger force in half
- DCPSi model features a fully adjustable body pad for maximum operator comfort in any position (shoulder, hip, chest, etc.)
- DCPxSi model includes an ergonomically designed shoulder stock
- Adjustable secondary hand grip
- All pressure-bearing components are stainless steel
- Includes coupling to attach 1/4″ NPT Male nozzles (see HHTC Nozzles, page G-47)

REPLACEMENT CARTRIDGE

15,000 psi DuraSafe Shut-in Style Control Guns utilize the CPSi-15 cartridge, shown above, to completely rebuild the gun in about 30 seconds! **Part No. 60419**

GUNS

PART NO.	MODEL	TRIGGER ACTUATION	REST TYPE	INLET CONNECTION*	BARREL SIZE	LENGTH		MAX. OPERATING PRESSURE	
						in	mm	psi	bar
STANDARD, WELDED GUN									
54445	DCPxSI-15	Single	Shoulder Stock	1/2" NPT Male	3/8" NPT	70	1778	15,000	1034
54330	DCPSI-15	Single	Body Pad	1/2" NPT Male	3/8" NPT	67	1702	15,000	1034
FULLY FIELD REPAIRABLE GUN									
65747	FR-15SI	Single	Shoulder Stock	1/2" NPT Male	3/8" NPT	65	1651	15,000	1034

*Adapters available for other connection types. See details on all connection types in Section I.

NOTE: The Jetstream PI082 Safety Pamphlet Section 'CONTROL GUNS AND DEVICES' Item 5:

The use of a Safety Shroud and Safety Whip Hose with handheld control guns is strongly recommended for additional operator protection against a burst occuring in the high pressure hose connected to the gun. User of Hand Grip and Shoulder Stock in hand-held control guns will provide greater operator comfort and safety.

DURASAFE™ HAND GUNS
SHUT-IN STYLE
STANDARD, WELDED GUN

PART NO.	MODEL	TRIGGER ACTUATION	REST TYPE	INLET CONNECTION*	BARREL SIZE	LENGTH		MAX. OPERATING PRESSURE	
						in	mm	psi	bar
54445	DCPxSI-15	Single	Shoulder Stock	1/2" NPT Male	3/8" NPT	70	1778	15,000	1034
54330	DCPSI-15	Single	Body Pad	1/2" NPT Male	3/8" NPT	67	1702	15,000	1034

*Adapters available for other connection types. See details on all connection types in Section I.

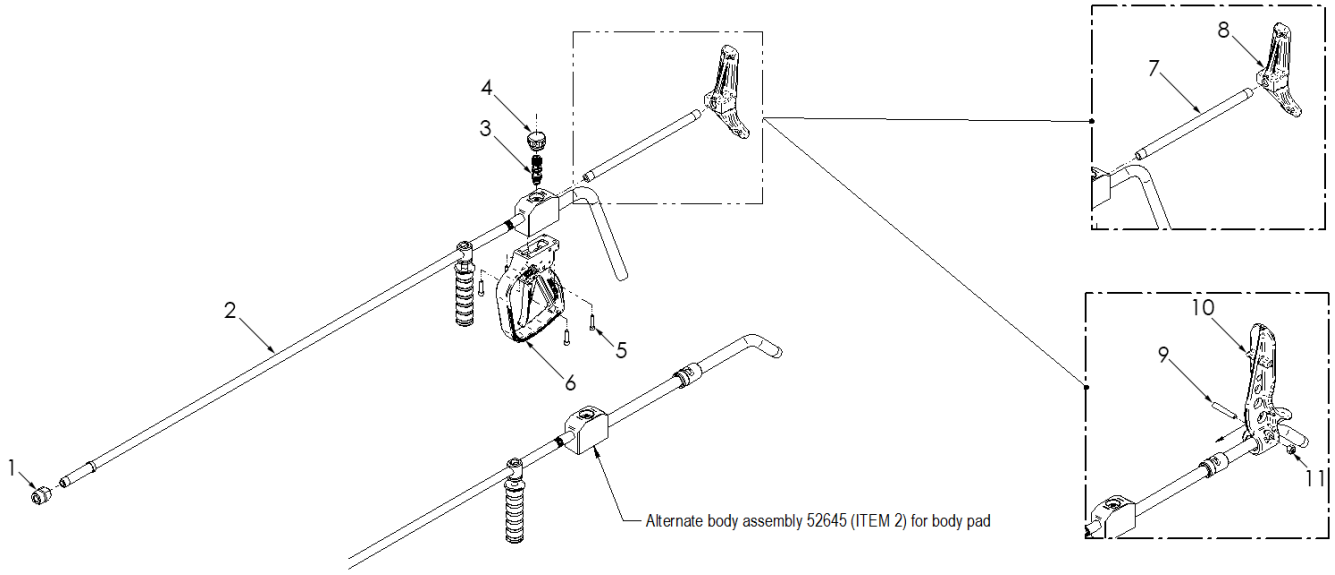

PART BREAKDOWN

ITEM	PART NO.	DESCRIPTION	ITEM	PART NO.	DESCRIPTION
1	26061	Coupling	8	65808	Shoulder Stock (54445)
2	54450	Body Assy (54445)	9	53303	Stud (54330)
	52645	Body Assy (54330)	10	53304	Body Pad (54330)
3	60419	Cartridge	11	25296	Nut (54330)
4	52543	Plug	12*	65998	Decal, Front Barrel, Green
5	26689	Capscrew	13*	64266	Decal, Rear Barrel, Green
6	57986-66	Handle Assy, Green	14*	71742	Decal, Body Green
7	50127	Extension, Shoulder Stock (54445)	15*	66332	Cushion. Shoulder Stock (54445)

*Not shown.

DURASAFE™ HAND GUNS
SHUT-IN STYLE
FIELD REPAIRABLE GUN

PART NO.	MODEL	TRIGGER ACTUATION	REST TYPE	INLET CONNECTION*	BARREL SIZE	LENGTH		MAX. OPERATING PRESSURE	
						in	mm	psi	bar
65747	FR-15SI	Single	Shoulder Stock	1/2" NPT Male	3/8" NPT	65	1651	15,000	1034

*Adapters available for other connection types. See details on all connection types in Section I.

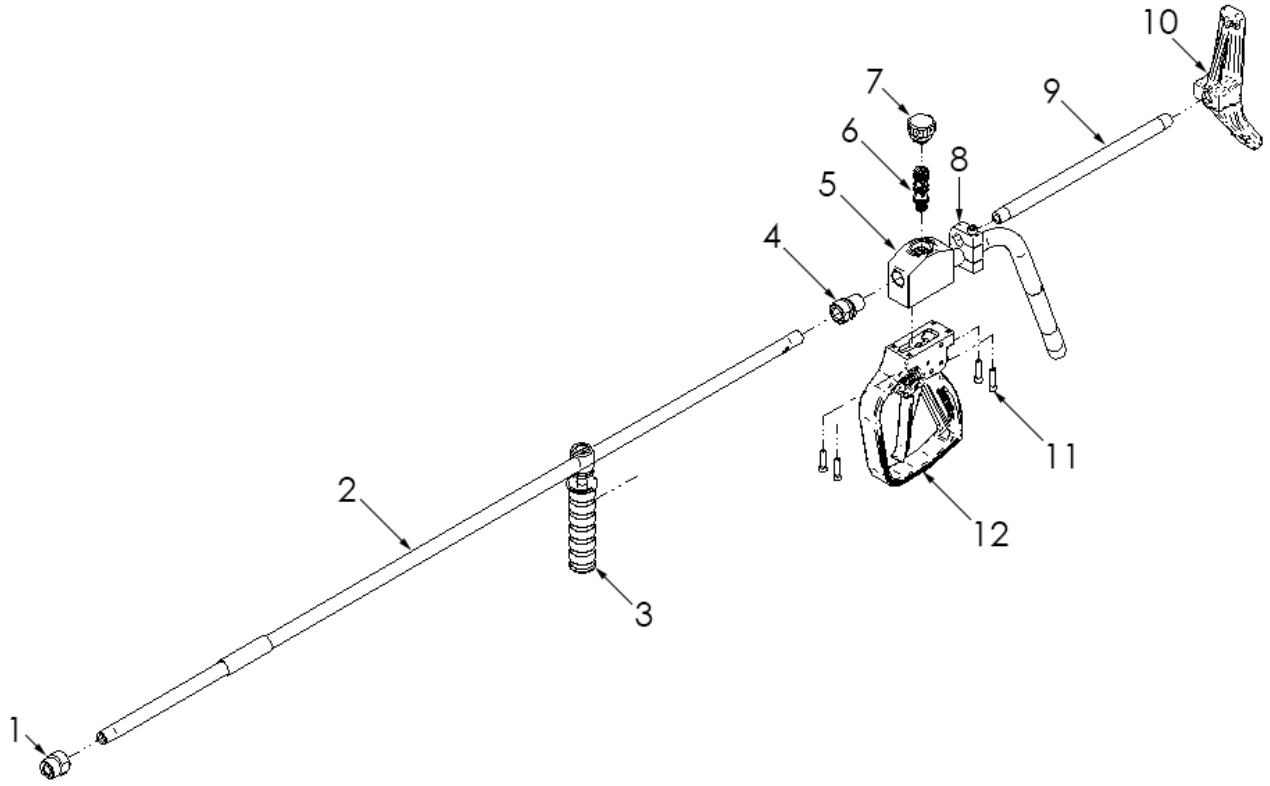

PART BREAKDOWN

ITEM	PART NO.	DESCRIPTION	ITEM	PART NO.	DESCRIPTION
1	26061	Coupling	9	50127	Extension, Shoulder Stock
2	51098-48	Barrel, Front	10	65808	Shoulder Stock
3	52198	Grip Assy	11	26689	Capscrew
4	26062	Bushing	12	57986-66	Handle Assy, Green
5	65742	Body Assy	13*	65998	Decal, Front Barrel, Green
6	60419	Cartridge	14*	64266	Decal, Rear Barrel, Green
7	52543	Plug	15*	71742	Decal, Body Green
8	62055	Clamp	16*	66332	Cushion, Shoulder Stock

*Not shown.

DURASAFE™ FOOT GUNS

DUMP STYLE

Ideal for a variety of waterblast tube cleaning applications, the DuraSafe family of foot-operated dump style control guns allow the operator to have complete control of the pressure at all times.

- 30-second field replaceable cartridge design for minimal downtime
- Safest foot valves in the industry! Custom safety cage and thick blast wall protect operator better than any foot control gun in the industry
- Pipe threaded (NPT) inlet and outlet
- Built-in "wings" protect high pressure hoses and fittings from external damage
- All pressure-bearing components precision machined stainless steel
- Threaded diffuser to route dump water for collection or disposal
- All Jetstream Foot Guns are color-coded green for added safety at 15,000 psi (1034 bar)

PART NO.	MODEL	INLET & OUTLET CONNECTION*	DIFFUSER OUTLET CONNECTION	MAXIMUM FLOW		DIMENSIONS (H X W X D)		MAX. OPERATING PRESSURE	
				gpm	lpm	in	mm	psi	bar
55435	DCF-15-1/2"	1/2" NPT Female	3/4" NPT Female	35	130	7.9 x 14.8 x 13.3	200 x 375 x 338	15,000	1034
59374	DCF-15-3/4"	3/4" NPT Female	1" NPT Female	75	285	7.9 x 14.8 x 13.5	200 x 375 x 343	15,000	1034
59376	DCF-15-1"	1" NPT Female	1-1/4" NPT Female	125	475	7.9 x 14.8 x 15.5	200 x 375 x 393	15,000	1034

*See details on all connection types in Section I.

REPLACEMENT CARTRIDGE

All 15,000 psi DuraSafe Dump Style Control Guns utilize the C-15 cartridge, shown above, to completely rebuild the dump valve in about 30 seconds!
Part No. 50902

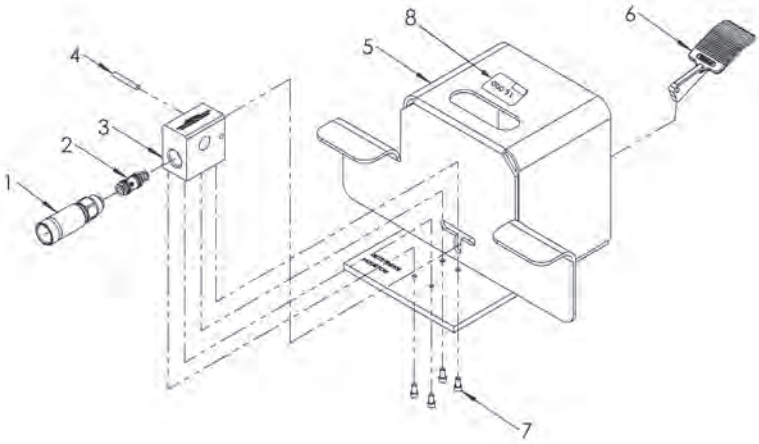

PART BREAKDOWN

ITEM	PART NO.	DESCRIPTION	ITEM	PART NO.	DESCRIPTION
1	50460	Diffuser (DCF-15-1/2")	3	53368	Body (DCF-15-1/2")
	51638	Diffuser (DCF-15-3/4")		53549	Body (DCF-15-3/4")
	53959	Diffuser (DCF-15-1")		53954	Body (DCF-15-1")
2	50902	C-15 Cartridge (DCF-15-1/2")	4	26453	Pin
	52750	C-15 Mag Cartridge (DCF-15-3/4")	5	55432	Base
	53915	C-15-1" Cartridge (DCF-15-1")	6	53373	Pedal
			7	25261	Capscrew
			8	66114	Decal, 15K, VSS

DURASAFE™ FOOT GUNS

SHUT-IN STYLE

Ideal for a variety of waterblast tube cleaning applications, the DCFSi-15 DuraSafe foot-operated shut-in style control gun allows the operator to have complete control of the pressure at all times.

- Shut-in style control guns do not dump water when the trigger is released. Useful in applications where excess water spillage and disposal are concerns. Use with plunger style pumps such as the UNx® require the installation of a Shut-In Regulator Valve (see page C-18)
- 30-second field replaceable cartridge design for minimal downtime
- Safest shut-in foot valve in the industry! Custom safety cage and thick blast wall protect operator better than any foot control gun in the industry
- Pipe threaded (NPT) inlet and outlet
- Built-in "wings" protect high pressure and fittings from external damage
- All pressure-bearing components precision machined stainless steel

PART NO.	MODEL	INLET & OUTLET CONNECTION*	MAXIMUM FLOW		DIMENSIONS (H X W X D)		MAX. OPERATING PRESSURE	
			gpm	lpm	in	mm	psi	bar
59377	DCFSi-15	1/2" NPT Female	35	130	7.9 x 14.8 x 11.3	200 x 375 x 286	15,000	1034

*See details on all connection types in Section I.

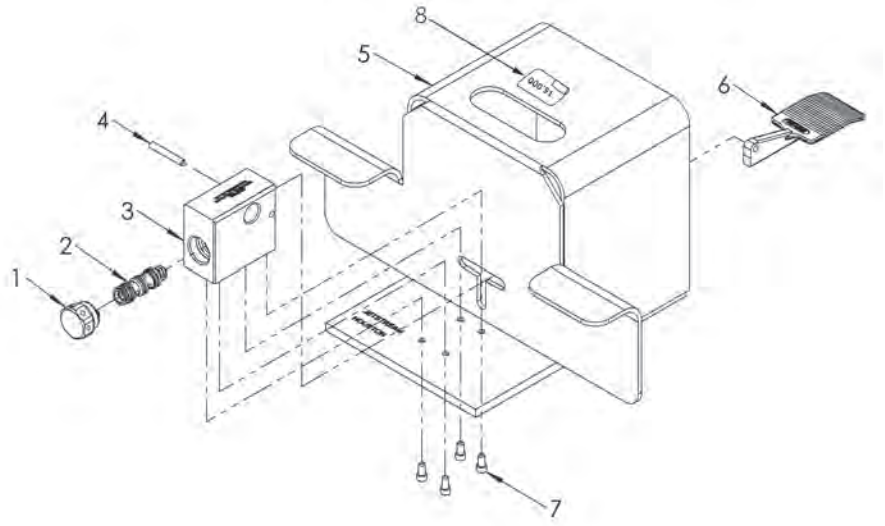

REPLACEMENT CARTRIDGE

15,000 psi DuraSafe Shut-in Style Control Guns utilize the CPSi-15 cartridge, shown above, to completely rebuild the gun in about 30 seconds!
Part No. 60419

PART BREAKDOWN

ITEM	PART NO.	DESCRIPTION	ITEM	PART NO.	DESCRIPTION
1	52543	Cartridge Plug	5	55432	Base
2	60419	CPSi-15 Cartridge	6	53373	Pedal
3	53374	Body	7	25261	Capscrew
4	26453	Pin	8	66114	Decal, 15K, VSS

ROTARY, STRAIGHT, PIPE & TUBE CLEANING TOOLS & NOZZLES

Jetstream provides tools for different 15,000 psi applications in surface preparation, pipe cleaning and tube cleaning. All of our tools are made of stainless steel, hardened steel, or tungsten carbide and treated to withstand high pressures.

The Orbi-Jet™ X22 is a self-powered rotating tool that utilizes up to four rotating jets. The four-jet tool can use either four or two nozzles and includes a magnetic braking system for maximum control. There is minimal wear for longer run-time hours. Maintenance is made easy through a rebuild kit.

Replacement nozzle tips are available in various connection sizes and orifice materials.

Pipe cleaning tools adapt to various diameter pipes. Our RotoMag™ X22 is a self-powered rotating, eight port tool designed specifically for larger diameter pipes. For smaller pipes, two static nozzles are available with up to sixteen ports.

Jetstream J-Force™ two, three, four, and six-inch rotating tools are self-powered with nozzles designed to easily navigate and clean two, three, four, and six-inch pipes with bends.

Tube cleaning nozzles are drilled for each order and are designed for use at the end of a flex lance or rigid lance. The configurations and flow ratings are customized to each specific request per the job requirements. Jetstream has put together eighteen standard patterns; however, these can be drilled in any pattern requested, once deemed the nozzle will perform efficiently. These drilled nozzles can also be enhanced with the additions of a tube spinner and thruster.

NOTE: Jetstream is an authorized reseller for many vendors and offers specialized rotary, abrasive cutting surface preparation, pipe and tube cleaning nozzles upon request.

Orbi-Jet X22 shown with Twis-Lok shroud.

Premium Kit (Part No. 63305).

ORBI-JET™ X22

ROTARY SURFACE PREPARATION TOOL

The Jetstream Orbi-Jet X22 is a rugged, self-powered, rotating tool utilizing up to four compound angle, hard-hitting, replaceable nozzles, rated up to 22,000 psi. The tool rotates in multiple 360° user-selectable patterns to provide maximum surface coverage and superior cleaning.

- Each of the four powerful, compound-angle, rotating jets follows a different cleaning path to provide greater coverage and less streaking.
- Three tools in one: use two nozzles for a narrow path, two nozzles for a wide path, or all four nozzles for a complete clean
- Magnetic braking system controls rotational speed for minimal wear and maximum impact without streaking.
- Jetstream light-weight, Twis-Lok™ shroud protects the tool from damage during operation and provides safer water displacement.
- Rebuild kit allows seven minute overhaul of wear components right in the field using two standard hex wrenches.
- Use with Tungsten Carbide OX Series, Sapphire UHPX/UHPXi Series, or tetraCORE™ Synthetic Diamond UHPXD Series nozzles
- **Premium Kit (PN. 63305)** and **Starter Kit (PN. 63230)** available for full product tools. **15K Adapter (PN. 28386)** included in Premium & 15K Kit **(PN 63306)**. **Note:** The Starter kit does NOT come with the adapter.

PART NO.	INLET CONNECTION*	SPEED RANGE	DIAMETER (LESS SHROUD)		ASSEMBLY LENGTH (WITH ADAPTER)		ASSEMBLY WEIGHT		MAX. FLOW RATE (HAND GUN)		MAX. OPERATING PRESSURE**	
		RPM	in	mm	in	mm	lbs	kg	gpm	lpm	psi	bar
63230	3/8" NPT Female	1000-1500	2.0	51	4.0	102	2.1	0.95	7.5	28.4	15,000	1034

*Inlet connection on the tool is 9/16" MP; inlet listed is with the adapter that is included in the part numbers shown.
**Without 15K Adapter, Orbi-Jet X22 max pressure is 22,000 psi (1500 bar).

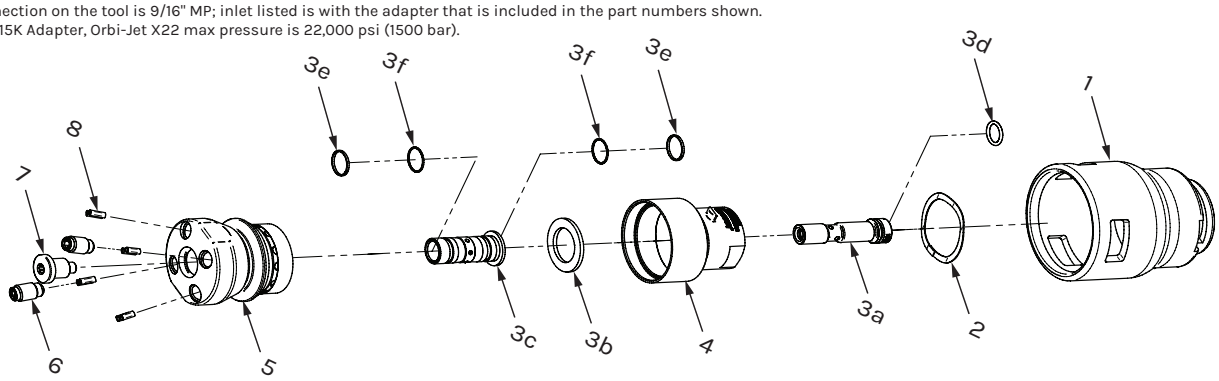

PART BREAKDOWN

ITEM	PART NO.	DESCRIPTION	ITEM	PART NO.	DESCRIPTION
1	63202	Twis-Lok Shroud	6	28435	Straightening Vane
2	26762	Shroud Retaining Ring	7	UHPX-PLUG	Plug
3	52305	Rebuild Kit (Items 3a to 3g)	8	54276	Retaining Screw
4	63207	Body	9	28386	15K Adapter
5	54277	Rotor	10*	63302	Maintenance Kit

*Not shown.

OX SERIES CARBIDE NOZZLES

- High productivity carbide nozzles designed for use in the Orbi-Jet X22 tool
- Specially engineered carbide orifices provide the most aggressive waterjets available
- Efficient design reduces turbulence and orifice wear
- Select nozzles from the charts below by choosing operating pressure, desired flow, and two or four nozzle operation

PART NO.*	ORIFICE DIAMETER		6,000 PSI (413 BAR)		8,000 PSI (551 BAR)		10,000 PSI (689 BAR)		12,000 PSI (827 BAR)		15,000 PSI (1,034 BAR)	
	in	mm	gpm	lpm	gpm	lpm	gpm	lpm	gpm	lpm	gpm	lpm
FOUR OX NOZZLES												
OX-018	.018	.46	3.5	13.2	4.2	15.9	4.8	18.2	5.3	20.1	5.8	22.0
OX-025	.025	.64	6.1	23.1	7.2	27.3	8.1	30.7	9.0	34.1	9.9	37.5
OX-029	.029	.74	8.0	30.3	9.4	35.6	10.6	40.1	11.6	43.9	12.9	48.8
OX-033	.033	.84	10.2	38.6	11.8	44.7	13.3	50.3	14.7	55.6	16.3	61.7
OX-038	.038	.97	13.3	50.3	15.4	58.3	17.3	65.5	19.0	71.9	21.2	80.3
OX-042	.042	1.07	16.0	60.6	18.6	70.4	20.9	79.1	23.0	87.1	25.5	96.5
OX-046	.046	1.17	19.1	72.3	22.1	83.7	24.8	93.9	27.3	103.3	30.4	115.1
TWO OX NOZZLES												
OX-018	.018	.46	1.9	7.2	2.6	9.8	3.0	11.4	3.3	12.5	3.6	13.6
OX-025	.025	.64	3.1	11.7	4.1	15.5	4.6	17.4	5.1	19.3	5.6	21.2
OX-029	.029	.74	4.0	15.1	5.1	19.3	5.8	22.0	6.5	24.6	7.1	26.9
OX-033	.033	.84	4.9	18.5	6.4	24.2	7.2	27.3	8.0	30.3	8.8	33.3
OX-038	.038	.97	6.3	23.8	8.2	31.0	9.2	34.8	10.2	38.6	11.3	42.8
OX-042	.042	1.07	7.6	28.8	9.8	37.1	11.0	41.6	12.1	45.8	13.4	50.7
OX-046	.046	1.17	9.0	34.1	11.5	43.5	13.0	49.2	14.3	54.1	15.9	60.2

*Orifice size (or equivalent for fan types) is denoted in the part number (-018, etc.)

Flow charts on this page are applicable only to the Orbi-Jet™ X22 tool which uses a portion of the water to provide a bearing for nozzle rotation. Lower flow rates available and are listed in the Product Instructions.

WARNING: Flow rates greater than 7.5 gpm (28.4 lpm) are not recommended for use in hand gun cleaning operations with an Orbi-Jet™ X22 due to excessive thrust.

ACCESSORIES

NOZZLE EXTENSIONS

Part No. 53844
Extensions are installed into the Orbi-Jet™ X22 tool to provide a wider cleaning pattern and serve as flow straighteners, further reducing turbulence for more aggressive waterjets. Sold Individually.

UHPX/UHPXi/UHPXD SERIES NOZZLES

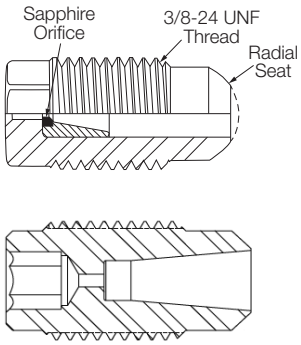

- Premium high productivity sapphire (UHPX and UHPXi) and synthetic diamond (UHPXD) nozzles for use in the Orbi-Jet X22.
- Tapered orifice retainer reduces turbulence and provides a cohesive, aggressive waterjet.
- Select nozzles from the charts below by choosing operating pressure, desired flow, and two or four nozzle operation.
- UHPX and UHPXD have 5/16" external hex, UHPXi have 5/32" internal hex

FOUR UHPX/UHPXI/UHPXD NOZZLES

UHPX PART NO.	UHPXI PART NO.	UHPXD PART NO.	ORIFICE DIAMETER		10,000 PSI (689 BAR)		12,500 PSI (862 BAR)		15,000 PSI (1,034 BAR)		17,500 PSI (1,207 BAR)		20,000 PSI (1,379 BAR)		22,500 PSI (1,551 BAR)	
			in	mm	gpm	lpm	gpm	lpm	gpm	lpm	gpm	lpm	gpm	lpm	gpm	lpm
UHPX-018	UHPXi-018	UHPXD-018	.018	0.46	3.7	14.0	4.2	15.9	4.5	17.0	4.8	18.2	5.0	18.9	5.2	19.7
UHPX-019	UHPXi-019	UHPXD-019	.019	0.48	4.0	15.1	4.6	17.4	4.9	18.5	5.2	19.7	5.4	20.4	5.6	21.2
UHPX-020	UHPXi-020	UHPXD-020	.020	0.51	4.3	16.3	4.9	18.5	5.3	20.1	5.6	21.2	5.8	22.0	6.1	23.1
UHPX-021	UHPXi-021	UHPXD-021	.021	0.53	4.7	17.8	5.3	20.1	5.7	21.6	6.0	22.7	6.3	23.8	6.6	25.0
UHPX-022	UHPXi-022	UHPXD-022	.022	0.56	5.0	18.9	5.7	21.6	6.1	23.1	6.5	24.6	6.8	25.7	7.1	26.9
UHPX-023	UHPXi-023	UHPXD-023	.023	0.58	5.4	20.4	6.1	23.1	6.5	24.6	6.9	26.1	7.3	27.6	7.6	28.8
UHPX-024	UHPXi-024	UHPXD-024	.024	0.61	5.7	21.6	6.5	24.6	7.0	26.5	7.4	28.0	7.8	29.5	8.2	31.0
UHPX-025	UHPXi-025	UHPXD-025	.025	0.64	6.1	23.1	6.9	26.1	7.5	28.4	7.9	29.9	8.4	31.8	8.8	33.3
UHPX-026	UHPXi-026	UHPXD-026	.026	0.66	6.5	24.6	7.4	28.0	8.0	30.3	8.5	32.2	9.0	34.1	9.4	35.6
UHPX-027	UHPXi-027	UHPXD-027	.027	0.69	7.0	26.5	7.9	29.9	8.5	32.2	9.0	34.1	9.6	36.3	10.0	37.9
UHPX-028	UHPXi-028	UHPXD-028	.028	0.71	7.4	28.0	8.4	31.8	9.0	34.1	9.6	36.3	10.2	38.6	10.7	40.5
UHPX-029	UHPXi-029	UHPXD-029	.029	0.74	7.9	29.9	8.9	33.7	9.6	36.3	10.2	38.6	10.8	40.9	11.4	43.2
UHPX-030	UHPXi-030	UHPXD-030	.030	0.76	8.3	31.4	9.4	35.6	10.2	38.6	10.9	41.3	11.5	43.5	12.1	45.8
UHPX-031	UHPXi-031	UHPXD-031	.031	0.79	8.8	33.3	9.9	37.5	10.8	40.9	11.5	43.5	12.2	46.2	12.8	48.5
UHPX-032	UHPXi-032	UHPXD-032	.032	0.81	9.3	35.2	10.5	39.7	11.4	43.2	12.2	46.2	12.9	48.8	13.6	51.5
UHPX-033	UHPXi-033	UHPXD-033	.033	0.84	9.8	37.1	11.1	42.0	12.0	45.4	12.9	48.8	13.6	51.5	14.4	54.5
UHPX-034	UHPXi-034	UHPXD-034	.034	0.86	10.4	39.4	11.7	44.3	12.7	48.1	13.6	51.5	14.4	54.5	15.2	57.5
UHPX-035	UHPXi-035	UHPXD-035	.035	0.89	10.9	41.3	12.3	46.6	13.4	50.7	14.3	54.1	15.2	57.5	16.0	60.6
UHPX-036	UHPXi-036	UHPXD-036	.036	0.91	11.5	43.5	12.9	48.8	14.0	53.0	15.0	56.8	16.0	60.6	16.8	63.6
UHPX-037	UHPXi-037	UHPXD-037	.037	0.94	12.1	45.8	13.6	51.5	14.8	56.0	15.8	59.8	16.8	63.6	17.7	67.0
UHPX-038	UHPXi-038	UHPXD-038	.038	0.97	12.7	48.1	14.3	54.1	15.5	58.7	16.6	62.8	17.6	66.6	18.6	70.4
UHPX-039	UHPXi-039	UHPXD-039	.039	0.99	13.3	50.3	15.0	56.8	16.3	61.7	17.4	65.9	18.5	70.0	19.5	73.8
UHPX-040	UHPXi-040	UHPXD-040	.040	1.02	13.9	52.6	15.7	59.4	17.0	64.4	18.3	69.3	19.4	73.4	20.5	77.6
UHPX-042	UHPXi-042	UHPXD-042	.042	1.07	15.2	57.5	17.1	64.7	18.6	70.4	20.0	75.7	21.3	80.6	22.5	85.2

*Orifice size (or equivalent for fan types) is denoted in the part number (-018, etc.).

Flow charts on this page are applicable only to the Orbi-Jet™ X22 tool which uses a portion of the water to provide a bearing for nozzle rotation. Lower flow rates available and are listed in the Product Instructions.

WARNING: Flow rates greater than 7.5 gpm (28.4 lpm) are not recommended for use in hand gun cleaning operations with an Orbi-Jet X22 due to excessive thrust.

ORBI-JET X22 NOZZLES

UHPX PART NO.	UHPXI PART NO.	UHPXD PART NO.	ORIFICE DIAMETER		10,000 PSI (689 BAR)		12,500 PSI (862 BAR)		15,000 PSI (1,034 BAR)		17,500 PSI (1,207 BAR)		20,000 PSI (1,379 BAR)		22,500 PSI (1,551 BAR)	
			in	mm	gpm	lpm	gpm	lpm	gpm	lpm	gpm	lpm	gpm	lpm	gpm	lpm
			TWO UHPX/UHPXI/UHPXD NOZZLES													
UHPX-025	UHPXi-025	UHPXD-025	.025	0.64	3.6	13.6	4.1	15.5	4.4	16.7	4.6	17.4	4.8	18.2	5.0	18.9
UHPX-026	UHPXi-026	UHPXD-026	.026	0.66	3.8	14.4	4.4	16.7	4.7	17.8	4.9	18.5	5.1	19.3	5.3	20.1
UHPX-027	UHPXi-027	UHPXD-027	.027	0.69	4.1	15.5	4.6	17.4	4.9	18.5	5.2	19.7	5.4	20.4	5.7	21.6
UHPX-028	UHPXi-028	UHPXD-028	.028	0.71	4.3	16.3	4.9	18.5	5.2	19.7	5.5	20.8	5.7	21.6	6.0	22.7
UHPX-029	UHPXi-029	UHPXD-029	.029	0.74	4.5	17.0	5.1	19.3	5.5	20.8	5.8	22.0	6.1	23.1	6.3	23.8
UHPX-030	UHPXi-030	UHPXD-030	.030	0.76	4.7	17.8	5.4	20.4	5.8	22.0	6.1	23.1	6.4	24.2	6.7	25.4
UHPX-031	UHPXi-031	UHPXD-031	.031	0.79	5.0	18.9	5.6	21.2	6.1	23.1	6.4	24.2	6.7	25.4	7.1	26.9
UHPX-032	UHPXi-032	UHPXD-032	.032	0.81	5.2	19.7	5.9	22.3	6.4	24.2	6.7	25.4	7.1	26.9	7.4	28.0
UHPX-033	UHPXi-033	UHPXD-033	.033	0.84	5.5	20.8	6.2	23.5	6.7	25.4	7.1	26.9	7.5	28.4	7.8	29.5
UHPX-034	UHPXi-034	UHPXD-034	.034	0.86	5.8	22.0	6.5	24.6	7.0	26.5	7.4	28.0	7.8	29.5	8.2	31.0
UHPX-035	UHPXi-035	UHPXD-035	.035	0.89	6.0	22.7	6.8	25.7	7.4	28.0	7.8	29.5	8.2	31.0	8.6	32.6
UHPX-036	UHPXi-036	UHPXD-036	.036	0.91	6.3	23.8	7.1	26.9	7.7	29.1	8.2	31.0	8.6	32.6	9.1	34.4
UHPX-037	UHPXi-037	UHPXD-037	.037	0.94	6.6	25.0	7.5	28.4	8.1	30.7	8.6	32.6	9.1	34.4	9.5	36.0
UHPX-038	UHPXi-038	UHPXD-038	.038	0.97	6.9	26.1	7.8	29.5	8.4	31.8	9.0	34.1	9.5	36.0	10.0	37.9
UHPX-039	UHPXi-039	UHPXD-039	.039	0.99	7.2	27.3	8.2	31.0	8.8	33.3	9.4	35.6	9.9	37.5	10.4	39.4
UHPX-040	UHPXi-040	UHPXD-040	.040	1.02	7.5	28.4	8.5	32.2	9.2	34.8	9.8	37.1	10.4	39.4	10.9	41.3
UHPX-042	UHPXi-042	UHPXD-042	.042	1.07	8.2	31.0	9.2	34.8	10.0	37.9	10.7	40.5	11.3	42.8	11.9	45.0
UHPX-046	UHPXi-046	UHPXD-046	.046	1.17	9.6	36.3	10.8	40.9	11.7	44.3	12.5	47.3	13.3	50.3	14.0	53.0

*Orifice size (or equivalent for fan types) is denoted in the part number (-018, etc.).

Flow charts on this page are applicable only to the Orbi-Jet™ X22 tool which uses a portion of the water to provide a bearing for nozzle rotation. Lower flow rates available and are listed in the Product Instructions.

WARNING: Flow rates greater than 7.5 gpm (28.4 lpm) are not recommended for use in hand gun cleaning operations with an Orbi-Jet X22 due to excessive thrust.

These resources contain additional technical information about the Orbi-Jet™ X22.

Click or scan the QR code.

Quick Start Guide
QSG-077

Product Instruction
PI-077

Jetting Calculator

2" J-FORCE™

PIPE CLEANING TOOL

The Jetstream 2-inch J-Force™ tool is a self-powered rotating tool designed to easily navigate and clean pipes with two-inch bends. The 2-inch J-Force™ tool has front, side, and rear jets that clear blockages, clean, and provide thrust to propel the tool down the pipe for maximum cleaning power and minimum wear. Water provides the rotational motion and creates the bearing on which the nozzles spin. No oil or ball bearings to replace!

- Equipped with three forward-facing ports at 15°/30°/45°, two radial ports at 90°, and two rearward-facing ports at 132°.
- Seven non-replaceable nozzles are factory installed and must be purchased separately at the time of order.
- **The tool is not designed to be repairable in the field.**

2" J-FORCE™ TOOL (JF2X15, JF2X22)

PART NO.	INLET CONNECTION*	SPEED RANGE	DIAMETER		ASSEMBLY LENGTH		ASSEMBLY WEIGHT		MAX. FLOW RATE		MAX.OPERATING PRESSURE	
		RPM	in	mm	in	mm	lbs	kg	gpm	lpm	psi	bar
					JF2X15							
65225	1/4" BSPP	1000-2000	1.36	35	2.02	51	.5	1.1	20	75	15,000	1000
64772	1/4" NPT	1000-2000	1.36	35	2.02	51	.5	1.1	20	75	22,000	1550
					JF2X22							
65272	3/8" MP LH	1000-2000	1.36	35	2.02	51	.5	1.1	20	75	22,000	1550
65273	3/8" MP RH	1000-2000	1.36	35	2.02	51	.5	1.1	20	75	22,000	1550
65274	9/16" MP LH	1000-2000	1.36	35	2.02	51	.5	1.1	20	75	22,000	1550
65275	9/16" MP RH	1000-2000	1.36	35	2.02	51	.5	1.1	20	75	22,000	1550

*See details on all connection types in Section I.

These resources contain additional technical information about the 2" J-Force™.

Click or scan the QR code.

Quick Start Guide-QSG-176

Product Instruction PI-176

Jetting Calculator

2” J-FORCE™ NOZZLES

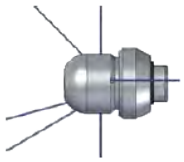

- Tool is equipped with seven nozzles: three forward-facing ports at 15°/30°/45°, two radial ports at 90°, and two rearward-facing ports at 132°.
- Non-replaceable nozzles are factory installed and must be purchased separately at the time of order.

UNIVERSAL CONFIGURATION*

FLOW (GPM)	10000 PSI				12500 PSI				15000 PSI			
	PULL (LBF)	NOZZLE DIAMETER (IN)			PULL (LBF)	NOZZLE DIAMETER (IN)			PULL (LBF)	NOZZLE DIAMETER (IN)		
		FWD x 3	90 X 2	REAR x 2		FWD x 3	90 X 2	REAR x 2		FWD x 3	90 X 2	REAR x 2
7												
8												
9	-6	0.016	0.016	0.029								
10	-6	0.016	0.020	0.029	-5	0.020	0.024	0.039				
11	-7	0.018	0.018	0.032	-8	0.018	0.032	0.039				
12	-7	0.018	0.024	0.032	-8	0.022	0.029	0.042	-6	0.016	0.016	0.026
13	-8	0.020	0.02	0.035	-9	0.018	0.018	0.032	-6	0.016	0.022	0.026
14	-8	0.020	0.024	0.035	-9	0.018	0.024	0.032	-6	0.018	0.020	0.029
15	-8	0.020	0.029	0.035	-9	0.018	0.026	0.032	-7	0.018	0.024	0.029
16	-8	0.020	0.032	0.035	-7	0.022	0.022	0.035	-7	0.02	0.020	0.032
17	-7	0.024	0.026	0.039	-7	0.022	0.024	0.035	-7	0.02	0.024	0.032
18	-7	0.024	0.029	0.039	-7	0.022	0.029	0.035	-7	0.02	0.026	0.032
19	-7	0.024	0.032	0.039	-7	0.022	0.032	0.035	-8	0.022	0.024	0.035
20	-7	0.026	0.029	0.042					-8	0.022	0.026	0.035

FLOW (GPM)	17500 PSI				20000 PSI				22000 PSI			
	PULL (LBF)	NOZZLE DIAMETER (IN)			PULL (LBF)	NOZZLE DIAMETER (IN)			PULL (LBF)	NOZZLE DIAMETER (IN)		
		FWD x 3	90 X 2	REAR x 2		FWD x 3	90 X 2	REAR x 2		FWD x 3	90 X 2	REAR x 2
7												
8												
9												
10												
11												
12												
13	-7	0.016	0.016	0.026								
14	-7	0.016	0.02	0.026								
15	-7	0.018	0.018	0.029	-8	0.016	0.018	0.026				
16	-7	0.018	0.022	0.029	-8	0.016	0.022	0.026	-9	0.016	0.018	0.026
17	-7	0.018	0.024	0.029	-8	0.018	0.020	0.029	-9	0.016	0.022	0.026
18	-8	0.02	0.022	0.032	-8	0.018	0.024	0.029	-9	0.018	0.020	0.029
19	-8	0.02	0.024	0.032	-8	0.018	0.026	0.029	-9	0.018	0.022	0.029
20	-8	0.02	0.026	0.032					-9	0.018	0.026	0.029

* Jetstream does not recommend operating the 2" J-Force tool at pressure/configuration combinations indicated in dark gray.

3" J-FORCE™

PIPE CLEANING TOOL

The Jetstream J-Force™ 3" tool is a self-powered rotating tool designed to easily navigate and clean pipes with three-inch bends. The 3-inch J-Force tool has front, side, and rear jets that clear blockages, clean, and provide thrust to propel the tool down the pipe for maximum cleaning power and minimum wear. Water provides the rotational motion and creates the bearing on which the nozzles spin. No oil or ball bearings to replace!

- Equipped with two forward-facing ports at 10°, 2 two radial ports at 45° and two at 100°, and two rearward-facing ports at 135° that accept Jetstream **P1** and **P1SO** type nozzles.
- Designed with an eddy-current braking system which controls rotation speed for maximum cleaning power and minimum wear.
- Completely field repairable in less than 5 minutes!
- **Premium Kits** and **Starter Kits** are available for full product tools (see table below). Premium kits include a rebuild kit with a replacement mandrel, O-rings, bushings, a thrust bearing, and sealant required to completely rebuild the tool quickly and easily.

3" J-FORCE™ TOOL (JF3X15, JF3X22)

PART NO.	INLET CONNECTION*	SPEED RANGE	DIAMETER		ASSEMBLY LENGTH		ASSEMBLY WEIGHT		MAX. FLOW RATE		MAX. OPERATING PRESSURE	
		RPM	in	mm	in	mm	lbs	kg	gpm	lpm	psi	bar
					JF3X15							
67859	3/8" NPT	1000-2000	1.98	50	2.87	73	1.45	0.66	30	114	15,000	1034
					JF3X22							
67860	9/16" Type M Male	1000-2000	1.98	50	2.87	73	1.45	0.66	30	114	22,000	1516
67861	3/8" MP Tube LH	1000-2000	1.98	50	2.87	73	1.45	0.66	30	114	22,000	1516
67862	3/8" MP Tube RH	1000-2000	1.98	50	2.87	73	1.45	0.66	30	114	22,000	1516
67863	9/16" MP Tube LH	1000-2000	1.98	50	2.87	73	1.45	0.66	30	114	22,000	1516
67864	9/16" MP Tube RH	1000-2000	1.98	50	2.87	73	1.45	0.66	30	114	22,000	1516

*See details on all connection types in Section I.

TOOL KITS

PART NO.	KIT TYPE	INLET CONNECTION
67871	Starter	3/8" NPT
67872	Premium	3/8" NPT
67873	Starter	9/16" Type M Male
67874	Premium	9/16" Type M Male
67875	Starter	3/8" MP Tube LH
67876	Premium	3/8" MP Tube LH
67877	Starter	3/8" MP Tube RH
67878	Premium	3/8" MP Tube RH
67879	Starter	9/16" MP Tube LH
67880	Premium	9/16" MP Tube LH
67881	Starter	9/16" MP Tube RH
67882	Premium	9/16" MP Tube RH

3" J-FORCE™ TOOLS (JF3X15, JF3X22)

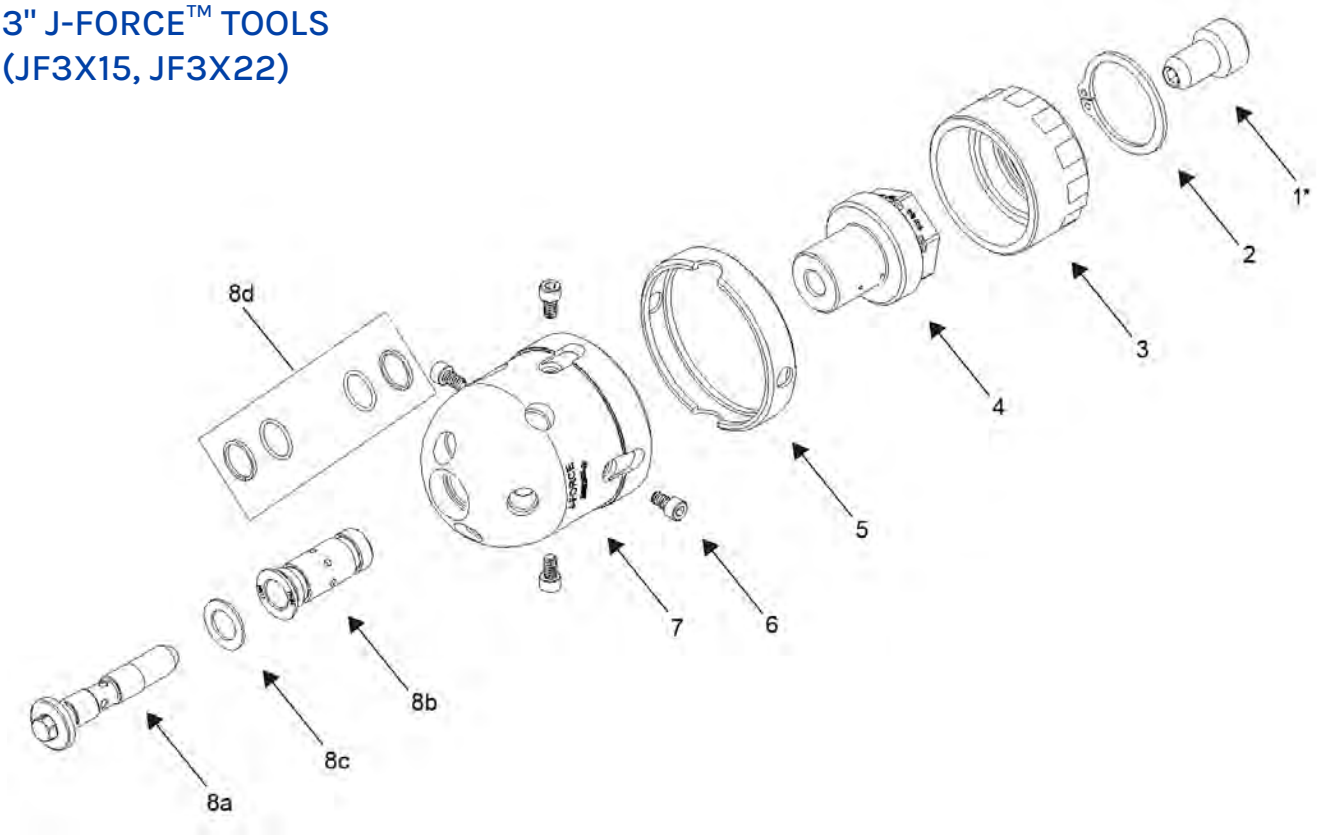

PART BREAKDOWN

ITEM	PART NO.	DESCRIPTION	ITEM	PART NO.	DESCRIPTION
1	67101	Connector, Mandrel (67860 only)	5	67094	Wear Ring
2	67823	Retaining Ring	6	67822	Wear Ring Screws
3	67093	Brake Adjuster	7	68130	Head Assy
4	67103	Inlet Nut, 1/4" NPT (67859)	8	67870	Rebuild Kit
	67102	Inlet Nut, 9/16" Type M (67860)	8a	67088	Mandrel
	67100	Inlet Nut, 3/8" MP LH (67861)	8b	67090	Flange Bushing
	67491	Inlet Nut, 3/8" MP RH (67862)	8c	67089	Thrust Bearing
	67095	Inlet Nut, 9/16" MP LH (67863)	8d	67869	O-Ring Maintenance Kit
	67821	Inlet Nut, 9/16" MP RH (67864)			

P1 / P1S0 NOZZLES

P1

P1S0

- Low profile design for unobstructed pipe cleaning
- Stainless steel (P1) and sapphire (P1S0) orifices
- Tapered geometry provides highly cohesive, distortion-free waterjets for concentrated, work saving cleaning and cutting power
- Straight (0°) patterns
- 1/16" NPT Male connection
- 22,000 psi (1516 bar) maximum working pressure

UNIVERSAL CONFIGURATION*

FLOW (GPM)	10000 PSI					12500 PSI					15000 PSI				
	PULL (LBF)	NOZZLE DIAMETER (IN)**				PULL (LBF)	NOZZLE DIAMETER (IN)**				PULL (LBF)	NOZZLE DIAMETER (IN)**			
		FRONT, FWD x 2, SIDE x 2			REAR x 2		FRONT, FWD x 2, SIDE x 2			REAR x 2		FRONT, FWD x 2, SIDE x 2			REAR x 2
12						-13	0.018	0.018	0.018	0.046	-10	0.018	0.018	0.018	0.038
13	-13	0.018	0.026	0.018	0.062	-14	0.018	0.018	0.026	0.046	-15	0.018	0.018	0.018	0.042
14	-17	0.018	0.018	0.018	0.067	-18	0.018	0.018	0.018	0.052	-15	0.018	0.018	0.024	0.042
15	-19	0.018	0.018	0.018	0.070	-21	0.018	0.018	0.018	0.055	-19	0.018	0.018	0.018	0.046
16	-21	0.018	0.018	0.018	0.073	-22	0.018	0.018	0.026	0.055	-21	0.018	0.018	0.026	0.046
17	-21	0.018	0.018	0.026	0.073	-22	0.018	0.018	0.029	0.055	-27	0.018	0.018	0.018	0.052
18	-25	0.018	0.018	0.018	0.078	-29	0.018	0.018	0.018	0.062	-32	0.018	0.018	0.018	0.055
19	-25	0.018	0.018	0.029	0.078	-29	0.018	0.018	0.026	0.062	-29	0.018	0.018	0.029	0.052
20	-24	0.020	0.022	0.029	0.078	-35	0.018	0.018	0.018	0.067	-33	0.018	0.018	0.026	0.055
21	-26	0.018	0.018	0.038	0.078	-35	0.018	0.018	0.026	0.067	-34	0.018	0.018	0.029	0.055
22	-26	0.018	0.018	0.042	0.078	-38	0.018	0.018	0.018	0.070	-43	0.018	0.018	0.018	0.062
23	-27	0.018	0.018	0.046	0.078	-42	0.018	0.018	0.018	0.073	-44	0.018	0.018	0.026	0.062
24	-27	0.018	0.018	0.052	0.078	-43	0.018	0.018	0.026	0.073	-45	0.018	0.018	0.029	0.062
25	-28	0.018	0.018	0.055	0.078	-43	0.018	0.018	0.029	0.073	-41	0.020	0.022	0.029	0.062
26	-26	0.018	0.018	0.067	0.073	-49	0.018	0.018	0.018	0.078	-47	0.018	0.026	0.018	0.067
27	-29	0.018	0.018	0.062	0.078	-50	0.018	0.018	0.026	0.078	-48	0.018	0.026	0.026	0.067
28	-29	0.018	0.018	0.067	0.078	-47	0.018	0.026	0.026	0.078	-49	0.018	0.026	0.029	0.067
29	-30	0.018	0.018	0.070	0.078	-48	0.018	0.024	0.032	0.078	-49	0.018	0.018	0.046	0.062
30	-27	0.018	0.029	0.067	0.078	-43	0.026	0.026	0.029	0.078	-48	0.026	0.024	0.024	0.070

* Jetstream does not recommend operating the 3" J-Force tool at pressure/configuration combinations indicated in dark gray.
** Nozzle part numbers are P1-XXX and P1S0-XXX, where -XXX is the orifice size.

3” J-FORCE™ NOZZLES

UNIVERSAL CONFIGURATION*															
FLOW (GPM)	17500 PSI					20000 PSI					22500 PSI				
	PULL (LBF)	NOZZLE DIAMETER (IN)**				PULL (LBF)	NOZZLE DIAMETER (IN)**				PULL (LBF)	NOZZLE DIAMETER (IN)**			
		FRONT, FWD x 2, SIDE x 2			REAR x 2		FRONT, FWD x 2, SIDE x 2			REAR x 2		FRONT, FWD x 2, SIDE x 2			REAR x 2
15	-11	0.018	0.018	0.020	0.032	-12	0.018	0.018	0.018	0.032					
16	-17	0.018	0.018	0.018	0.035	-13	0.018	0.018	0.020	0.032					
17	-24	0.018	0.018	0.018	0.038	-11	0.018	0.020	0.022	0.032					
18	-16	0.018	0.020	0.024	0.035	-27	0.018	0.018	0.018	0.038	-11	0.018	0.018	0.029	0.029
19	-34	0.018	0.018	0.018	0.042	-19	0.018	0.020	0.024	0.035	-30	0.018	0.018	0.018	0.038
20	-20	0.020	0.020	0.024	0.038	-29	0.018	0.018	0.024	0.038	-25	0.018	0.018	0.026	0.035
21	-36	0.018	0.018	0.024	0.042	-39	0.018	0.018	0.018	0.042	-20	0.018	0.018	0.032	0.032
22	-45	0.018	0.018	0.018	0.046	-32	0.018	0.018	0.029	0.038	-26	0.018	0.022	0.024	0.038
23	-38	0.018	0.018	0.029	0.042	-42	0.018	0.018	0.026	0.042	-35	0.018	0.018	0.029	0.038
24	-48	0.018	0.018	0.026	0.046	-44	0.018	0.018	0.029	0.042	-28	0.020	0.020	0.029	0.038
25	-49	0.018	0.018	0.029	0.046	-24	0.018	0.024	0.032	0.038	-14	0.020	0.024	0.032	0.035
26	-28	0.020	0.024	0.032	0.042	-42	0.018	0.020	0.032	0.042	-23	0.024	0.018	0.032	0.038
27	-43	0.018	0.018	0.038	0.042	-21	0.018	0.018	0.046	0.029	-41	0.018	0.018	0.038	0.038
28	-28	0.018	0.020	0.046	0.035	-49	0.018	0.018	0.038	0.042	-23	0.018	0.018	0.046	0.029
29	-45	0.018	0.018	0.042	0.042	-20	0.022	0.024	0.038	0.038	-28	0.020	0.020	0.042	0.035
30	-16	0.024	0.024	0.042	0.038	-11	0.029	0.018	0.038	0.038	-44	0.018	0.018	0.042	0.038

* Jetstream does not recommend operating the 3" J-Force tool at pressure/configuration combinations indicated in dark gray.
** Nozzle part numbers are P1-XXX and P1S0-XXX, where -XXX is the orifice size.

These resources contain additional technical information about the 3" J-Force™.

Click or scan the QR code.

Quick Start Guide
QSG-198

Product Instruction
PI-198

Jetting Calculator

4" J-FORCE™ GEN III

PIPE CLEANING TOOL

The Jetstream J-Force™ 4" Gen III tool is a self-powered rotating tool designed to easily navigate and clean pipes with four-inch bends. The 4-inch J-Force Gen III tool has front, side, and rear jets that clear blockages, clean, and provide thrust to propel the tool down the pipe for maximum cleaning power and minimum wear. Water provides the rotational motion and creates the bearing on which the nozzles spin. No oil or ball bearings to replace!

- Equipped with two forward-facing ports at 10° and two at 45°, two radial ports at 100°, and two rearward-facing ports at 135° that accept Jetstream **JS2**, **JS2D** and **P2TCS** type nozzles.
- Designed with an eddy-current braking system which controls rotation speed for maximum cleaning power and minimum wear.
- Completely field repairable in less than 5 minutes!
- **Premium Kits** and **Starter Kits** are available for full product tools (see table below). Premium kits include a rebuild kit with a replacement mandrel, O-rings, bushings, a thrust bearing, and sealant required to completely rebuild the tool quickly and easily.

4" J-FORCE™ GEN III TOOL (JF4X15, JF4X22)

PART NO.	INLET CONNECTION*	SPEED RANGE	DIAMETER		ASSEMBLY LENGTH		ASSEMBLY WEIGHT		MAX. FLOW RATE		MAX. OPERATING PRESSURE	
		RPM	in	mm	in	mm	lbs	kg	gpm	lpm	psi	bar
					JF4X15							
67029	3/8" NPT	1000-2000	2.75	70	3.85	98	3.85	1.75	40	150	15,000	1034
					JF4X22							
67030	3/4" Type M	1000-2000	2.75	70	3.85	98	3.90	1.77	40	150	22,000	1516
67031	9/16" MP LH	1000-2000	2.75	70	3.85	98	3.90	1.77	40	150	22,000	1516
67032	9/16" MP RH	1000-2000	2.75	70	3.85	98	3.90	1.77	40	150	22,000	1516

*See details on all connection types in Section I.

TOOL KITS

PART NO.	KIT TYPE	INLET CONNECTION
67627	Starter	3/8" NPT
67629	Starter	Type M
67631	Starter	9/16" MP LH
67633	Starter	9/16" MP RH
67628	Premium	3/8" NPT
67630	Premium	Type M
67632	Premium	9/16" MP LH
67634	Premium	9/16" MP RH

4" J-FORCE™ GEN III TOOLS (JF4X15, JF4X22)

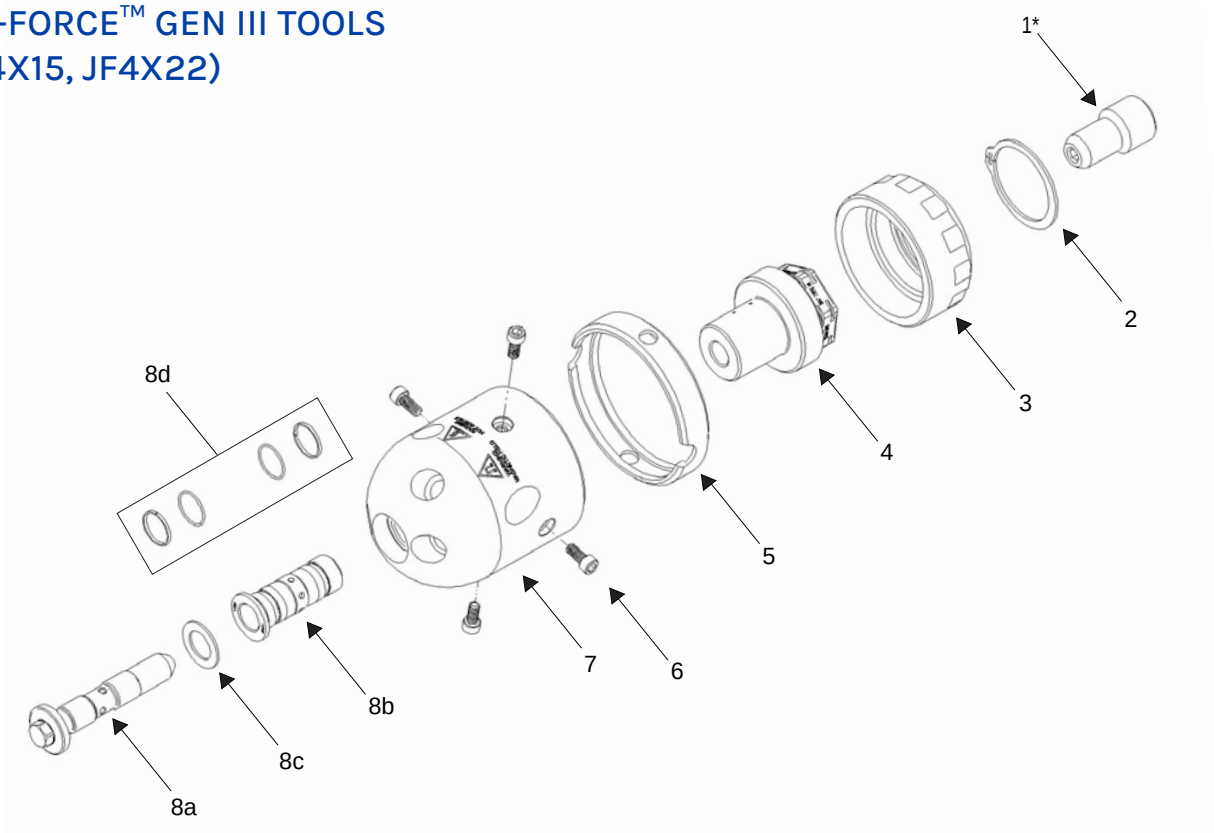

PART BREAKDOWN

ITEM	PART NO.	DESCRIPTION	ITEM	PART NO.	DESCRIPTION
1	65923	Connector, Mandrel (67030 only)	6	66220	Wear Ring Screws
2	64864	Retaining Ring	7	67028	Head Assy
3	64007	Brake Adjuster	8	66248	Rebuild Kit
4	65906	Inlet Nut, 3/8” NPT (67029)	8a	66336	Mandrel
	65922	Inlet Nut, 3/4” Type M (67030)	8b	52349	Flange Bushing
	65921	Inlet Nut, 9/16” MP LH (67031)	8c	64100	Thrust Bearing
	65919	Inlet Nut, 9/16” MP RH (67032)	8d	66249	O-Ring Maintenance Kit
5	64103	Wear Ring			

4” J-FORCE™ GEN III NOZZLES

JS2 / P2TCS NOZZLES

JS2

P2TCS

- Low profile design for unobstructed pipe cleaning with short inlet
- Stainless steel (JS2) and carbide (P2TCS) nozzles
- Tapered geometry provides highly cohesive, distortion-free waterjets for concentrated, work saving cleaning and cutting power
- Straight (0°) patterns
- 1/8" NPT Male connection
- 22,000 psi (1517 bar) maximum working pressure

UNIVERSAL CONFIGURATION*

FLOW (GPM)	10000 PSI			12500 PSI			15000 PSI		
	PULL (LBF)	NOZZLE DIAMETER (IN)**		PULL (LBF)	NOZZLE DIAMETER (IN)**		PULL (LBF)	NOZZLE DIAMETER (IN)**	
		FWD x 4, SIDE x 2	REAR x 2		FWD x 4, SIDE x 2	REAR x 2		FWD x 4, SIDE x 2	REAR x 2
21	-27	0.020	0.047						
22				-38	0.018	0.047			
23	-40	0.018	0.052				-27	0.020	0.042
24	-37	0.020	0.052	-34	0.020	0.047			
25	-33	0.022	0.052	-29	0.022	0.047	-46	0.018	0.047
26	-51	0.018	0.057				-41	0.020	0.047
27	-48	0.020	0.057	-46	0.020	0.052			
28	-44	0.022	0.057	-42	0.022	0.052	-35	0.022	0.047
29				-64	0.018	0.057	-56	0.020	0.052
30	-40	0.024	0.057	-60	0.020	0.057			
31	-36	0.026	0.057						
32	-59	0.022	0.063	-31	0.026	0.052			
34	-29	0.029	0.057						
35	-51	0.026	0.063						

FLOW (GPM)	17500 PSI			20000 PSI			22000 PSI		
	PULL (LBF)	NOZZLE DIAMETER (IN)**		PULL (LBF)	NOZZLE DIAMETER (IN)**		PULL (LBF)	NOZZLE DIAMETER (IN)**	
		FWD x 4, SIDE x 2	REAR x 2		FWD x 4, SIDE x 2	REAR x 2		FWD x 4, SIDE x 2	REAR x 2
23	-38	0.018	0.042						
24							-33	0.018	0.038
25	-32	0.020	0.042	-43	0.018	0.042	-26	0.020	0.038
26							-47	0.018	0.042
27	-26	0.022	0.042	-36	0.020	0.042			
28	-48	0.020	0.047						

* Jetstream does not recommend operating the 4" J-Force Gen III tool at pressure/configuration combinations indicated in dark gray.
** Nozzle part numbers are JS2-XXX and P2TCS-XXX, where -XXX is the orifice size.

JS2D NOZZLES

JS2D

- Low profile design for unobstructed pipe cleaning with short inlet
- High productivity synthetic diamond nozzles
- Tapered geometry provides highly cohesive, distortion-free waterjets for concentrated, work saving cleaning and cutting power
- Straight (0°) patterns
- 1/8″ NPT Male connection
- 22,000 psi (1517 bar) maximum working pressure
- Please use the Jetting Calculator on the web site or contact your Jetstream Representative to determine the proper nozzle configuration for your application

** Nozzle part numbers are JS2D-XXX, where -XXX is the orifice size.

These resources contain additional technical information about the 4" J-Force™ Gen III.

Click or scan the QR code.

Quick Start Guide
QSG-197

Product Instruction
PI-197

Jetting Calculator

6" J-FORCE™ GEN II

PIPE CLEANING TOOL

The Jetstream J-Force™ 6" Gen II tool is a self-powered rotating tool designed to easily navigate and clean pipes with six-inch bends. The 6-inch J-Force Gen II tool has front, side, and rear jets that clear blockages, clean, and provide thrust to propel the tool down the pipe for maximum cleaning power and minimum wear. Water provides the rotational motion and creates the bearing on which the nozzles spin. No oil or ball bearings to replace!

- Equipped with two forward-facing ports at 10°, two radial ports at 45° and two at 100°, and two rearward-facing ports at 135° that accept Jetstream **P4TC**, **JS4F** and **JS4FD** type nozzles.
- Designed with an eddy-current braking system which controls rotation speed for maximum cleaning power and minimum wear.
- Completely field repairable in less than 5 minutes!
- **Premium Kits** and **Starter Kits** are available for full product tools (see table below). Premium kits include a rebuild kit with a replacement mandrel, O-rings, bushings, a thrust bearing, and sealant required to completely rebuild the tool quickly and easily.

6" J-FORCE™ GEN II TOOL (JF6X15, JF6X22)

PART NO.	INLET CONNECTION*	SPEED RANGE	DIAMETER		ASSEMBLY LENGTH		ASSEMBLY WEIGHT		MAX. FLOW RATE		MAX. OPERATING PRESSURE	
		RPM	in	mm	in	mm	lbs	kg	gpm	lpm	psi	bar
					JF6X15							
68883	1/2" NPT	800-1000	3.75	95	5.34	136	11.0	5.0	60	226	15,000	1034
					JF6X22							
68884	9/16" MP	800-1000	3.75	95	5.34	136	11.0	5.0	60	226	22,000	1516
68885	M24	800-1000	3.75	95	5.34	136	11.0	5.0	60	226	22,000	1516

*See details on all connection types in Section I.

TOOL KITS

PART NO.	KIT TYPE	INLET CONNECTION
68886	Starter	1/2" NPT
68887	Premium	1/2" NPT
68888	Starter	9/16" MP
68889	Premium	9/16" MP
68890	Starter	M24
68891	Premium	M24

6" J-FORCE™ GEN II TOOLS (JF6X15, JF6X22)

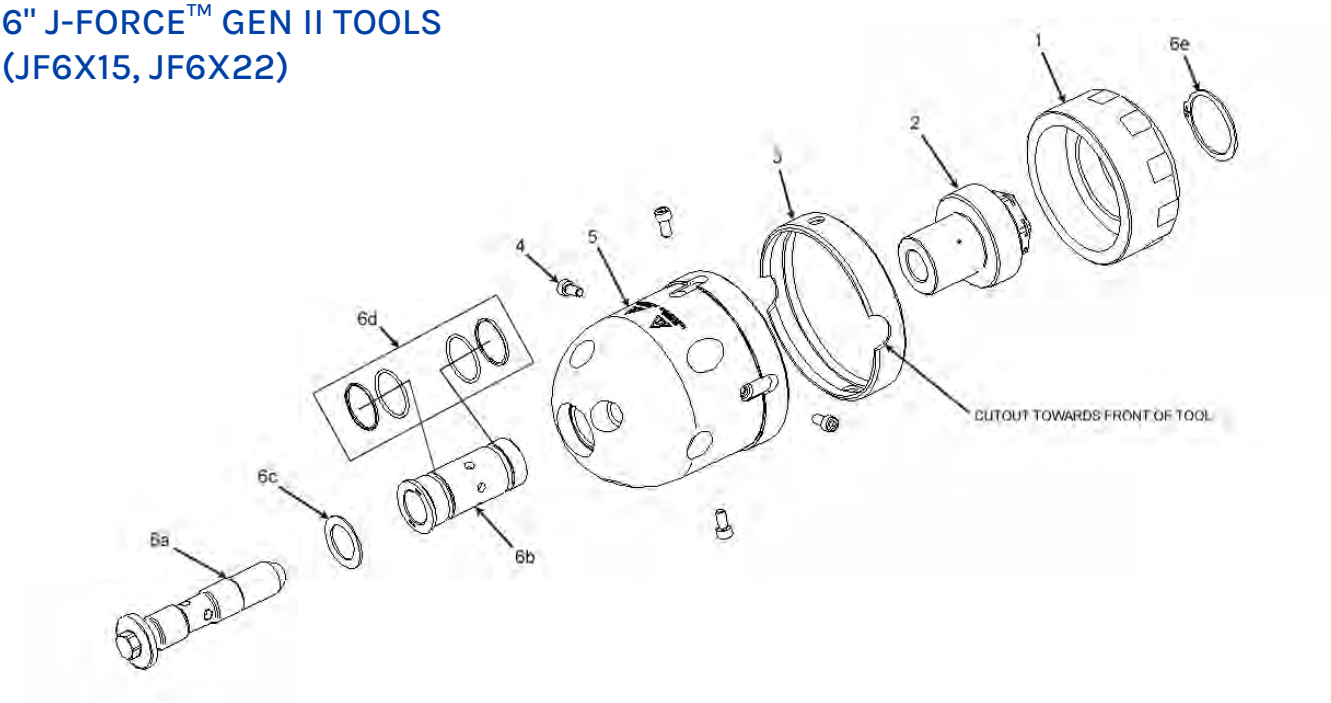

PART BREAKDOWN

ITEM	PART NO.	DESCRIPTION	ITEM	PART NO.	DESCRIPTION
1	64827	Brake Adjuster	6	65388	Rebuild Kit
2	66740	Inlet Nut, 1/2" NPT (64915)	6a	66347	Mandrel
	66348	Inlet Nut, 9/16" MP (65380)	6b	66137	Flange Bushing
	66741	Inlet Nut, M24 (65381)	6c	64823	Thrust Bearing
3	68656	Wear Ring	6d	65387	O-Ring Maintenance Kit
4	68898	Wear Ring Screws	6e	64864	Retaining Ring
5	68889	Head Assy			

6" J-FORCE™ GEN II NOZZLES

JS4FD NOZZLES

JS4FD

- Low profile design for unobstructed pipe cleaning with short inlet
- High productivity synthetic diamond (JS4FD) orifice
- Tapered geometry provides highly cohesive, distortion-free waterjets for concentrated, work saving cleaning and cutting power
- Straight (0°) patterns
- 1/4" NPT Male connection
- 22,000 psi (1517 bar) maximum working pressure
- Please use the Jetting Calculator on the web site or contact your Jetstream Representative to determine the proper nozzle configuration for your application

* Jetstream does not recommend operating the 6" J-Force Gen II tool at pressure/configuration combinations indicated in dark gray.
** Nozzle part numbers are JS4FD-XXX, where -XXX is the orifice size.

6” J-FORCE™ GEN II NOZZLES

JS4F / P4TC NOZZLES

JS4F

P4TC

- Low profile design for unobstructed pipe cleaning
- Stainless steel (JS4F) and carbide (P4TC) nozzles
- Tapered geometry provides highly cohesive, distortion-free waterjets for concentrated, work saving cleaning and cutting power
- Straight (0°) patterns
- 1/4″ NPT Male connection
- 22,000 psi (1517 bar) maximum working pressure

UNIVERSAL CONFIGURATION*

FLOW (GPM)	10000 PSI			12500 PSI			15000 PSI		
	PULL (LBF)	NOZZLE DIAMETER (IN)**		PULL (LBF)	NOZZLE DIAMETER (IN)**		PULL (LBF)	NOZZLE DIAMETER (IN)**	
		FWD x 4, SIDE x 2	REAR x 2		FWD x 4, SIDE x 2	REAR x 2		FWD x 4, SIDE x 2	REAR x 2
29							-41	0.020	0.047
30							-35	0.022	0.047
31				-64	0.018	0.057			
32	-40	0.024	0.057	-37	0.024	0.052	-29	0.024	0.047
33	-63	0.020	0.063						
34	-59	0.022	0.063	-31	0.026	0.052	-77	0.018	0.057
35				-82	0.018	0.063	-44	0.024	0.052
36	-29	0.029	0.057						
37	-69	0.022	0.067	-78	0.020	0.063	-67	0.022	0.057
38				-74	0.022	0.063			
39	-93	0.018	0.073				-61	0.024	0.057
40	-43	0.029	0.063	-102	0.018	0.069	-94	0.020	0.063
41				-87	0.022	0.067	-54	0.026	0.057
42	-96	0.020	0.075	-63	0.026	0.063			
43	-108	0.018	0.0.78	-94	0.022	0.069			
44	-105	0.020	0.078	-26	0.032	0.057			
45	-78	0.026	0.073	-54	0.029	0.063			
46	-27	0.035	0.063						
47	-97	0.024	0.078						
48									
49	-37	0.035	0.067						

* Jetstream does not recommend operating the 6" J-Force Gen II tool at pressure/configuration combinations indicated in dark gray.
** Nozzle part numbers are JS4F-XXX and P4TC-XXX, where -XXX is the orifice size.

6” J-FORCE™ GEN II NOZZLES

UNIVERSAL CONFIGURATION*									
FLOW (GPM)	17500 PSI			20000 PSI			22000 PSI		
	PULL (LBF)	NOZZLE DIAMETER (IN)**		PULL (LBF)	NOZZLE DIAMETER (IN)**		PULL (LBF)	NOZZLE DIAMETER (IN)**	
		FWD x 4, SIDE x 2	REAR x 2		FWD x 4, SIDE x 2	REAR x 2		FWD x 4, SIDE x 2	REAR x 2
27							-33	0.018	0.038
28	-32	0.020	0..042	-43	0.018	0.042	-26	0.020	0.038
29	-53	0.018	0.047				-47	0.018	0.042
30				-36	0.020	0.042			
31	-48	0.020	0.047	-61	0.018	0.047	-40	0.020	0.042
32									
33	-71	0.018	0.052	-54	0.020	0.047	-32	0.022	0.042
34	-65	0.020	0.052						
35	-34	0.024	0.047	-81	0.018	0.052	-60	0.020	0.047
36	-59	0.022	0.052						
37	-27	0.026	0.047	-39	0.024	0.047	-52	0.022	0.047
38	-52	0.024	0.052						
39									
40	-44	0.026	0.052						

* Jetstream does not recommend operating the 6" J-Force Gen II tool at pressure/configuration combinations indicated in dark gray.
** Nozzle part numbers are JS4F-XXX and P4TC-XXX, where -XXX is the orifice size.

These resources contain additional technical information about the 6" J-Force™ Gen II.

Click or scan the QR code.

Quick Start Guide
QSG-202

Product Instruction
PI-202

Jetting Calculator

ROTOMAG™ X22

PIPE CLEANING TOOL

The Jetstream RotoMag X22 and RotoMag X22N are self-powered rotating tools designed for cleaning stacks, sewer lines, drains, tanks, on-line boilers, and other large diameter pipes.

- Water provides the rotational motion and creates the bearing on which the nozzles spin. No oil or ball bearings to replace!
- Up to eight flush mounted nozzle inserts provide low profile for cleaning small pipes. Extensions are available for larger pipes, allowing the Rotomag to clean pipes ranging from 3-1/2 to 60 inches in diameter.
- The RotoMag X22 uses Tungsten Carbide **RM Series**, Sapphire **RMS Series** or tetraCORE™ Synthetic Diamond **RMD Series** nozzles. The RotoMag X22N uses Tungsten Carbide **P4TC Series** or tetraCORE™ Synthetic Diamond **JS4FD Series** nozzles.
- Magnetic braking system controls rotational speed for minimal wear and maximum impact without streaking.
- Rebuild kit allows five minute replacement of wear components right in the field using two standard hex wrenches.
- Includes six nozzle port plugs.
- **Premium Kits** and **Starter Kits** are available for full product tools. **15K Adapter (PN. 29534)** included in Premium Kits.

TOOL KITS

PART NO.	KIT TYPE	ASSY NO.
63811	Starter	63945
63813	Premium	63945
65129	Starter	65095
65130	Premium	65095

MODEL	PART NO.	INLET CONNECTION*	NOZZLE SIZE	SPEED RANGE	DIAMETER (LESS SHROUD)		ASSEMBLY LENGTH (WITH ADAPTER)		ASSEMBLY WEIGHT		MAX. FLOW RATE		MAX. OPERATING PRESSURE	
				RPM	in	mm	in	mm	lbs	kg	gpm	lpm	psi	bar
X22	63945**	3/4" NPT Female	1/2"-28 UNEF	50-300	2.75	70	8.65	225	6	2.7	50	189	15,000	1034
X22N	65095**		1/4" NPT											

*Inlet connection on the tool is 3/4" MP Female; inlet listed is with the adapter that is included in the Premium Kit with the part numbers shown.
**Without 15K Adapter, RotoMag X22 max pressure is 22,000 psi (1500 bar).

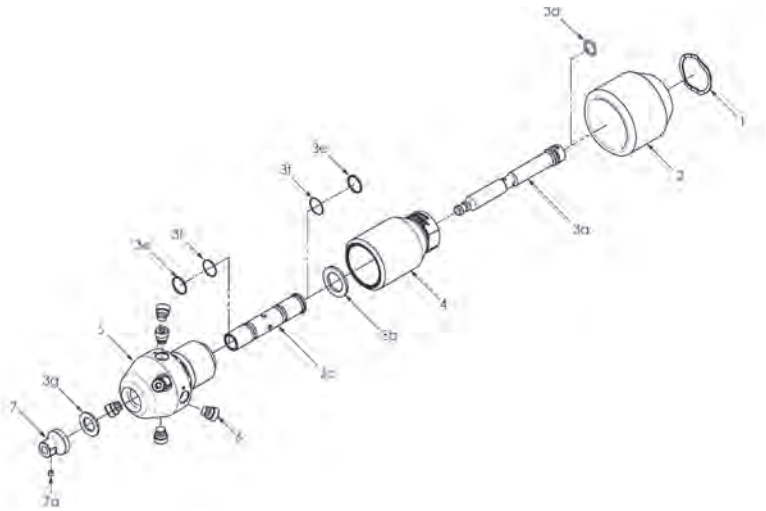

PART BREAKDOWN

ITEM	PART NO.	DESCRIPTION
1	27072	Retaining Ring
2	52803	Shroud
3	54535	Rebuild Kit
4	54452	Body
5	63944	Rotor (X22)
	65094	Rotor (X22N)
6	RM-PLUG	Plug (X22)
	64682	Plug (X22N)
6a*	26759	O-Ring
7	66170**	Tow Ring, No Eye
7a	26869	Setscrew
8*	29534	15K Adapter

*Not Shown. Reference page G-7.
**Standard. Tow Ring with Eye (52386) included with Premium kits only.

RM / P4TC SERIES—CARBIDE NOZZLES

- High productivity carbide nozzles designed for use in the RotoMag.
- Precision honed carbide orifices significantly outlast conventional nozzle orifice material.
- Low profile design mounts flush with the outside diameter of the RotoMag.
- Tapered geometry provides highly cohesive, distortion-free waterjets for concentrated, work-saving cleaning and cutting power
- Select nozzles from the charts below by choosing operating pressure, desired flow, and two, four, six, or eight nozzle operation.
- 1/2"-28 UNEF Male connection (RM Series) or 1/4" NPT Male (P4TC Series).

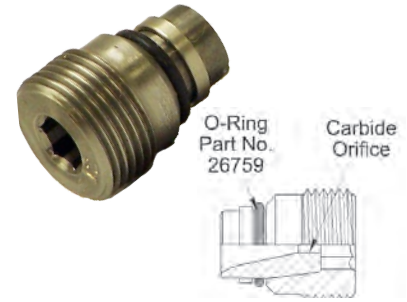

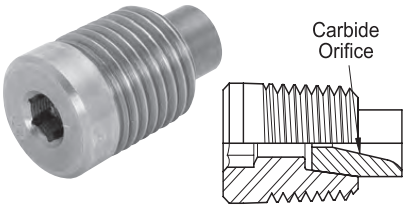

EIGHT RM / P4TC NOZZLES

RM PART NO.	P4TC PART NO.	ORIFICE DIAMETER*		3,000 PSI (206 BAR)		5,000 PSI (344 BAR)		7,000 PSI (482 BAR)		10,000 PSI (690 BAR)		12,500 PSI (862 BAR)		15,000 PSI (1,034 BAR)	
		in	mm	gpm	lpm	gpm	lpm	gpm	lpm	gpm	lpm	gpm	lpm	gpm	lpm
RM-018	P4TC-018	.018	.46			5.3	20.0	6.3	23.8	7.5	28.3	8.4	31.8	9.2	35.2
RM-025	P4TC-025	.025	.64	7.6	28.7	9.9	37.4	11.7	44.2	14.1	53.3	15.7	59.4	17.1	64.7
RM-029	P4TC-029	.029	.74	10.1	38.2	13.2	49.9	15.6	59.0	18.7	70.7	20.9	79.1	22.8	86.3
RM-033	P4TC-033	.033	.84	13.1	49.5	16.9	63.9	20.1	76.0	24.1	91.2	26.9	101.8	29.4	111.3
RM-038	P4TC-038	.038	.97	17.3	65.4	22.4	84.7	26.5	100.3	31.7	120.0	35.5	134.4	38.8	146.9
RM-042	P4TC-042	.042	1.07	21.1	79.8	27.3	103.3	32.3	122.3	38.7	146.5	43.2	163.5	47.3	179.0
RM-046	P4TC-046	.046	1.17	25.2	95.3	32.6	123.4	38.7	146.5	46.3	175.3				
RM-055	P4TC-055	.055	1.40	36.0	136.3	46.5	176.0								
RM-063	P4TC-063	.063	1.59	47.1	178.3										

SIX RM / P4TC NOZZLES

RM-018	P4TC-018	.018	.46							5.8	21.9	6.4	24.2	7	26.5
RM-025	P4TC-025	.025	.64	5.7	21.5	7.5	28.3	8.9	33.6	10.7	40.5	11.9	45.0	13.0	49.2
RM-029	P4TC-029	.029	.74	7.7	29.1	9.9	37.4	11.8	44.6	14.2	53.7	15.8	59.8	17.3	65.4
RM-033	P4TC-033	.033	.84	9.9	37.4	12.8	48.4	15.2	57.5	18.2	68.8	20.3	76.8	22.2	84.0
RM-038	P4TC-038	.038	.97	13.0	49.2	16.9	63.9	20.0	75.7	23.9	90.4	26.7	101.1	29.2	110.5
RM-042	P4TC-042	.042	1.07	15.8	59.8	20.5	77.6	24.3	91.9	29.1	110.2	32.5	123.0	35.6	134.8
RM-046	P4TC-046	.046	1.17	19.0	71.9	24.6	93.1	29.1	110.2	34.8	131.7	38.9	147.3	42.6	161.3
RM-055	P4TC-055	.055	1.40	27.0	102.2	35.0	132.5	41.4	156.7	49.6	187.8				
RM-063	P4TC-063	.063	1.59	35.4	134.0	45.8	173.4								
RM-067	P4TC-067	.067	1.70	40.0	151.4										
RM-070	P4TC-070	.070	1.78	43.7	165.4										
RM-073	P4TC-073	.073	1.85	47.5	179.8										

*Orifice size (or equivalent for fan types) is denoted in the part number (-018, etc.)

Flow charts on this page are applicable only to the RotoMag™ X22 tool which uses a portion of the water to provide a bearing for nozzle rotation. Lower flow rates available and are listed in the Product Instructions.

ROTOMAG™ X22 NOZZLES

FOUR RM / P4TC NOZZLES

RM PART NO.	P4TC PART NO.	ORIFICE DIAMETER*		3,000 PSI (206 BAR)		5,000 PSI (344 BAR)		7,000 PSI (482 BAR)		10,000 PSI (690 BAR)		12,500 PSI (862 BAR)		15,000 PSI (1,034 BAR)	
		in	mm	gpm	lpm	gpm	lpm	gpm	lpm	gpm	lpm	gpm	lpm	gpm	lpm
RM-025	P4TC-025	.025	.64					6.1	23.0	7.3	27.6	8.1	30.6	8.9	33.6
RM-029	P4TC-029	.029	.74			6.7	25.3	8.0	30.2	9.6	36.2	10.7	40.5	11.7	44.2
RM-033	P4TC-033	.033	.84	6.6	24.9	8.6	32.5	10.3	38.9	12.3	46.5	13.7	51.8	15.0	56.7
RM-038	P4TC-038	.038	.97	8.7	32.9	11.3	42.7	13.5	51.1	16.1	60.9	18.0	68.1	19.7	74.5
RM-042	P4TC-042	.042	1.07	10.6	40.1	13.8	52.2	16.4	62.0	19.6	74.1	21.9	82.9	23.9	90.4
RM-046	P4TC-046	.046	1.17	12.7	48.0	16.5	62.4	19.6	74.1	23.4	87.4	26.1	98.8	28.6	108.3
RM-055	P4TC-055	.055	1.40	18.1	68.5	23.4	88.5	27.8	105.2	33.2	125.7	37.1	140.4	40.6	153.7
RM-063	P4TC-063	.063	1.59	23.7	89.7	30.6	115.8	36.3	137.4	43.4	164.3	48.5	183.6		
RM-067	P4TC-067	.067	1.70	26.7	101.1	34.6	131	41.0	155.2	49.0	185.5				
RM-070	P4TC-070	.070	1.78	29.2	110.5	37.7	142.7	44.7	169.2						
RM-073	P4TC-073	.073	1.85	31.7	120.0	41.0	155.2	48.6	184.0						
RM-078	P4TC-078	.078	1.98	36.2	137.0	46.8	177.2								
RM-081	P4TC-081	.081	2.06	39.0	147.6										
RM-089	P4TC-089	.089	2.26	47.0	177.9										

TWO RM / P4TC NOZZLES

RM-029	P4TC-029	.029	.74									5.7	21.6	6.2	23.5
RM-033	P4TC-033	.033	.84					5.4	20.4	6.4	24.2	7.2	27.2	7.8	29.5
RM-038	P4TC-038	.038	.97			5.8	22.1	7.0	26.5	8.3	31.4	9.3	35.2	10.1	38.2
RM-042	P4TC-042	.042	1.07	5.4	20.4	7.0	26.5	8.4	31.8	10.1	38.2	11.2	42.2	12.3	46.5
RM-046	P4TC-046	.046	1.17	6.4	24.2	8.4	31.8	10.0	37.8	12.0	45.4	13.4	50.7	14.6	55.2
RM-055	P4TC-055	.055	1.40	9.1	34.6	11.9	45.0	14.1	53.3	16.9	63.9	18.8	71.1	20.6	77.9
RM-063	P4TC-063	.063	1.59	11.9	44.9	15.5	58.6	18.4	69.6	22.0	83.2	24.5	92.7	26.8	101.4
RM-067	P4TC-067	.067	1.70	13.5	51.1	17.5	66.3	20.7	78.3	24.8	93.8	27.7	104.9	30.3	114.7
RM-070	P4TC-070	.070	1.78	14.7	55.8	19.0	71.9	22.6	85.5	27.0	100.2	30.2	114.3	33.0	124.9
RM-073	P4TC-073	.073	1.85	16.0	60.5	20.7	78.3	24.5	92.7	29.3	110.9	32.8	124.2	35.8	135.5
RM-078	P4TC-078	.078	1.98	18.2	68.8	23.5	88.9	27.9	105.6	33.4	126.4	37.3	141.2	40.8	154.4
RM-081	P4TC-081	.081	2.06	19.6	74.1	25.4	96.1	30.1	113.9	36.0	136.3	40.2	152.2	44.0	166.6
RM-089	P4TC-089	.089	2.26	23.6	89.3	30.6	115.8	36.2	137.0	43.3	163.9	48.4	183.2		
RM-093	P4TC-093	.093	2.36	25.8	97.6	33.3	126.1	39.5	149.5	47.3	179.0				
RM-110	P4TC-110	.110	2.79	36.0	136.3	46.5	176.0								

*Orifice size (or equivalent for fan types) is denoted in the part number (-018, etc.)

Flow charts on this page are applicable only to the RotoMag X22 tool which uses a portion of the water to provide a bearing for nozzle rotation.
Lower flow rates available and are listed in the Product Instructions.

These resources contain additional technical information about the RotoMag™ X22.

Click or scan the QR code.

Quick Start Guide
QSG-078

Product Instruction
PI-078

Jetting Calculator

RMS / RMD NOZZLES

- High productivity sapphire (RMS) or synthetic diamond (RMD) nozzles designed for use in the RotoMag
- More durable than tungsten carbide for longer service life and lower operating cost
- Low profile design mounts flush with the outside diameter of the RotoMag
- Select nozzles from the charts below by choosing operating pressure, desired flow, and two, four, six or eight nozzle operation

	RMS PART NO.	RMD PART NO.	ORIFICE DIAMETER*		10,000 PSI (690 BAR)		12,500 PSI (862 BAR)		15,000 PSI (1,034 BAR)		17,500 PSI (1,207 BAR)		20,000 PSI (1,379 BAR)	
			in	mm	gpm	lpm	gpm	lpm	gpm	lpm	gpm	lpm	gpm	lpm
EIGHT RMS / RMD NOZZLES														
	RMS-018	RMD-018	.018	0.46	7.2	27.3	8.0	30.1	8.8	33.3	9.5	36.0	10.2	38.6
	RMS-025	RMD-025	.025	0.64	12.0	45.4	13.4	50.7	14.7	55.8	15.9	60.2	17.0	64.3
	RMS-029	RMD-029	.029	0.74	15.5	58.7	17.3	65.4	18.9	71.5	20.4	77.2	21.9	82.9
	RMS-033	RMD-033	.033	0.84	19.4	73.4	21.7	82.1	23.8	90.1	25.7	97.3	27.5	104.0
	RMS-038	RMD-038	.038	0.97	25.1	97.0	28.1	106.0	30.7	116.0	33.2	126.0	35.5	134.0
	RMS-042	RMD-042	.042	1.07	30.2	114.0	33.8	128.0	37.0	140.0	40.0	151.0	42.7	162.0
	RMS-046	RMD-046	.046	1.17	35.9	136.0	40.1	152.0	43.9	166.0	47.4	179.0	50.7	192.0
	RMS-052	RMD-052	.052	1.32	45.3	171.0	50.6	192.0						
SIX RMS / RMD NOZZLES														
	RMS-018	RMD-018	.018	0.46	5.4	20.4	5.8	22.1	6.3	23.7	6.6	25.1	7.0	26.5
	RMS-025	RMD-025	.025	0.64	9.0	34.1	9.9	37.4	10.7	40.4	11.4	43.2	12.1	45.8
	RMS-029	RMD-029	.029	0.74	11.6	43.9	12.8	48.4	13.9	52.5	14.9	56.2	15.8	59.7
	RMS-033	RMD-033	.033	0.84	14.6	55.1	16.1	61.0	17.5	66.3	18.8	71.1	20.0	75.6
	RMS-038	RMD-038	.038	0.97	18.8	71.3	20.9	79.0	22.7	86.0	24.4	92.4	26.0	98.4
	RMS-042	RMD-042	.042	1.07	22.7	85.8	25.2	95.3	27.4	103.8	29.5	111.7	31.4	119.0
	RMS-046	RMD-046	.046	1.17	26.9	101.8	29.9	113.1	32.6	123.4	35.1	132.8	37.4	141.6
	RMS-052	RMD-052	.052	1.32	33.9	128.5	37.8	143.0	41.2	156.1	44.4	168.1	47.4	179.4
FOUR RMS /RMD NOZZLES														
	RMS-025	RMD-025	.025	0.64	6.5	24.6	7.1	26.8	7.6	28.9	8.1	30.7	8.6	32.4
	RMS-029	RMD-029	.029	0.74	8.2	31.1	9.0	34.1	9.7	36.9	10.4	39.4	11.0	41.7
	RMS-033	RMD-033	.033	0.84	10.2	38.7	11.2	42.5	12.2	46.1	13.0	49.3	13.8	52.3
	RMS-038	RMD-038	.038	0.97	13.1	49.4	14.4	54.6	15.6	59.2	16.8	63.5	17.8	67.5
	RMS-042	RMD-042	.042	1.07	15.6	59.1	17.3	65.4	18.8	71.1	20.2	76.3	21.5	81.2
	RMS-046	RMD-046	.046	1.17	18.4	69.7	20.4	77.3	22.2	84.1	23.9	90.4	25.4	96.3
	RMS-052	RMD-052	.052	1.32	23.1	87.6	25.7	97.2	28.0	106.0	30.1	114.0	32.1	121.5
TWO RMS / RMD NOZZLES														
	RMS-033	RMD-033	.033	0.84	5.9	22.2	6.4	24.1	6.8	25.9	7.3	27.5	7.7	29.0
	RMS-038	RMD-038	.038	0.92	7.3	27.5	8.0	30.1	8.6	32.5	9.1	34.6	9.7	36.6
	RMS-042	RMD-042	.042	1.01	8.6	32.4	9.4	35.5	10.1	38.4	10.8	41.0	11.5	43.4
	RMS-046	RMD-046	.046	1.17	10.0	37.7	11.0	41.5	11.9	44.9	12.7	48.1	13.5	51.0
	RMS-052	RMD-052	.052	1.32	12.3	46.6	13.6	51.4	14.7	55.8	15.8	59.8	16.8	63.6

*Orifice size (or equivalent for fan types) is denoted in the part number (-018, etc.)

Flow charts on this page are applicable only to the RotoMag X22 tool which uses a portion of the water to provide a bearing for nozzle rotation.
Lower flow rates available and are listed in the Product Instructions.

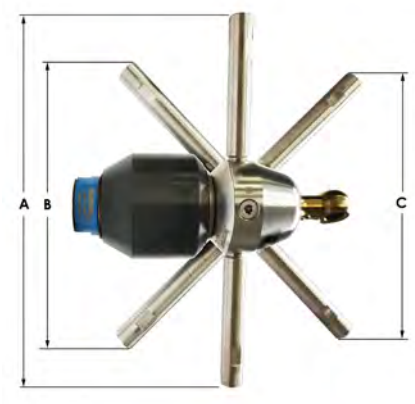

NOZZLE EXTENSIONS

- Available in two connection types and three lengths and can be coupled.
- 52320-XX part numbers for ½"-28 UNEF ports (RotoMag X22)
- 65166-XX part numbers for ¼" NPT ports (RotoMag X22N)
- Puts nozzles closer to the inner surface of large pipes for more effective cleaning.

PART NO.	DIAMETER "A"		DIAMETER "B"		DIAMETER "C"		INDIVIDUAL LENGTH "D"	
	in	mm	in	mm	in	mm	in	mm
52320-05 / 65166-05	5.0	127	4.3	109	4.3	109	1.25	32
52320-10 / 65166-10	10.0	254	7.9	201	7.8	198	3.75	95
52320-15 / 65166-15	15.0	381	11.4	290	11.3	287	6.25	159

REPLACEMENT PARTS (FOR 52320-XX)

PART NO.	DESCRIPTION
26759	O-Ring
26871	Vane

NOTE: Diameter includes two extensions plus rotor diameter. Individual length is the length of single extension when installed. When stacking extensions, add individual lengths to "A" dimension to reach desired diameter. New diameter = A + 2*D. Contact Jetstream representative for assistance.

PART NO. 66170

PART NO. 52386

TOW RINGS

- Eye-less tow ring **(PN. 66170)** standard with all RotoMag assemblies
- Optional tow ring with eye (**PN. 52386**) included in all Premium Kits.

NOZZLE PLUGS

Used to close unused RotoMag nozzle ports.

PART NO.	CONNECTION TYPE
RM-PLUG	1/2"- 28 UNEF (X22)
64682	1/4" NPT Internal Hex (X22N, standard)
JS4F-PLUG	1/4" NPT External Hex (X22N)

REPLACEMENT PARTS

PART NO.	DESCRIPTION
26759	O-Ring

ROTOMAG™ X22 ACCESSORIES

CENTRALIZERS

- Three models are available.
- Supports the tool while providing a controlled, even cleaning along with damage protection.

SKID STYLE

Used in pipes with and without elbows up to 10 in. (250 mm) in diameter.

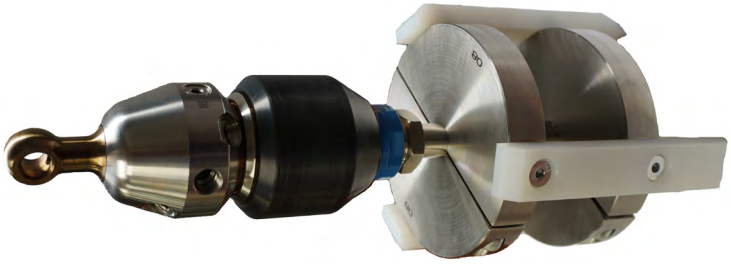

PART NO.	DIAMETER	
	in	mm
63842-ROTO-6	6.0	150
63842-ROTO-8	8.0	200
63842-ROTO-10	10.0	250

NOTE: Does not include nipple or fittings.

REPLACEMENT RUNNERS

Three plastic runners and six screws.

PART NO.	DIAMETER	
	in	mm
66104-06	6.0	150
66104-08	8.0	200
66104-10	10.0	250

RELATED ITEMS

Use 20K fittings listed below and adapt to 15K hose using proper fittings.

PART NO.	DESCRIPTION
29108-08	3/4" MP LH Tube Nipple
28383 (2)	3/4" MP Gland
28384 (2)	3/4" MP Collar

CAGE STYLE

Recommended for navigating complex piping arrangements to clean built up debris.

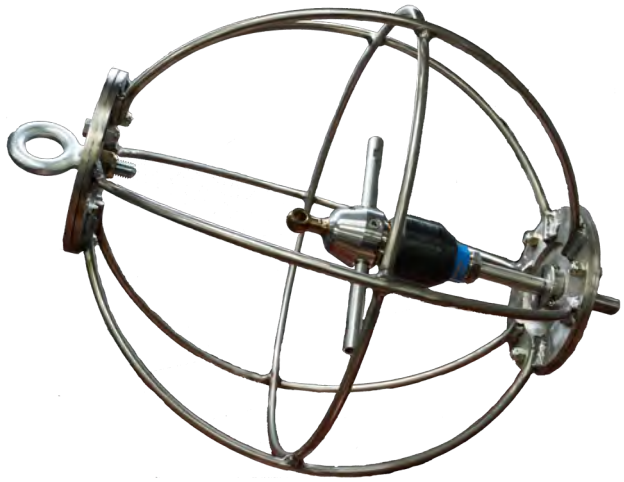

RotoMag X22 shown with optional Nozzle Extensions

PART NO.	DIAMETER	
	in	mm
63843-ROTO	18.75	475

NOTE: Does not include nipple or fittings.

RELATED ITEMS

PART NO.	DESCRIPTION
55450-7	7" long 1/2" NPT Male Nipple
28903	1/2" NPTF x 3/4" MP Male Adapter (Nipple to Tool)
27722 (4)	Capscrew, .25 F x 1.0"

NOTE: 3/4" NPT Nipple WILL NOT fit in cage centralizer because OD is too large. If 1/2" NPT Nipple is used, quantity (4) of capscrew 27722 must be used for the clamps to fit. Hose to nipple adapter may be needed based on end fitting.

ROTOMAG™ X22 ACCESSORIES

SCISSOR STYLE

Designed for straight pipe runs only. The adjustable frames allow for an effective pipe clean anywhere from 9-60 inches (230-1500 mm) in diameter. Compatible with most tools. Comes with a central lance (shown at right) for mounting tools.

PART NO.	CONNECTION	PRESSURE	WEIGHT	LENGTH
SMALL 9-18" [230-460 MM] PIPE DIAMETER				
64452-S15-8	1/2" NPT	15K PSI	20 lb. (9 kg)	36 in. (915 mm)
64452-S15-12	3/4" NPT	15K PSI	20 lb. (9 kg)	36 in. (915 mm)
MEDIUM 13-40" [330-1000MM] PIPE DIAMETER				
64452-M15-8	1/2" NPT	15K PSI	32 lb. (15 kg)	48 in. (1220 mm)
64452-M15-12	3/4" NPT	15K PSI	32 lb. (15 kg)	48 in. (1220 mm)
LARGE 16-60" [410-1500 MM] PIPE DIAMETER				
64452-L15-8	1/2" NPT	15K PSI	40 lb. (18 kg)	72 in. (1850 mm)
64452-L15-12	3/4" NPT	15K PSI	40 lb. (18 kg)	72 in. (1850 mm)

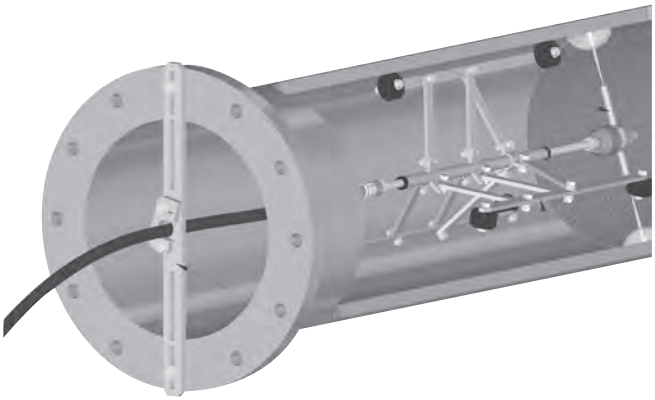

THE WARDEN™

Backout preventers are safety devices that mount to pipe flanges to prevent the RotoMag from backing out in the event of an unexpected and sudden shift in thrust that could result in injury to operators. Fits around hoses from 1/4" to 1" I.D.
Part No. 61447

SWIVEL X15

PIPE CLEANING SWIVEL TOOL

The Jetstream Swivel X15 is a self-powered, 360° rotating swivel tool designed for cleaning medium to large diameter pipes.

- Rotational speed of the nozzle head is controlled by the internal oil pump assembly on the swivel
- Up to six flush mounted **P4TC**, **HHTC0** or **HHD** Series nozzles
- Stainless steel swivel and head with flows up to 50 gpm (189.2 lpm). Flow rate calculated by multiplying number of nozzles used by the flow rates given on pages G-53 (P4TC and HHTC0 nozzles) and G-48 (HHD nozzles).
- Uses two, four or six nozzles
- Typical seal and oil life over 100 hours
- No Silicone needed
- Low seal replacement cost and quick change, with the seal shaft and cartridge all in one piece
- Speed adjustment without oil change or spillage
- A **Mega Kit (PN 66003)**, **Premium Kits (PNs. 64234-XXXXX)** and **Starter Kits (PNs. 64233-XXXXX)**, are available for full product tools. The Mega Kit contains all of the available nozzle holder configurations shown below; other kits contain one of the available nozzle holder configurations.
- **Oil Kit (PN. 64180)** and **Rebuild Kit (PN. 64247)** available for full servicing tools.

PART NO.	INLET CONNECTION*	SPEED RANGE	DIAMETER		ASSEMBLY LENGTH		ASSEMBLY WEIGHT		MAX. FLOW RATE		MAX. OPERATING PRESSURE	
		RPM	in	mm	in	mm	lbs	kg	gpm	lpm	psi	bar
52820**	3/4" NPT Female	50-1000	3-5/8"	92	9.5	241	11	5	50	189	15,000	1034

*See details on all connection types in Section I.
**Swivel only, no nozzle holder. See below for available nozzle holder configurations.

NOZZLE HOLDERS

PART NO.	NUMBER OF PORTS	HEAD STYLE	ORIFICE SIZE
52963	6	R44	1/4" NPT
65162	6	R44	3/4" ORS
65323	7	R44	1/4" NPT
65326	6	R22	1/4" NPT
65327	6	R22	3/4" ORS
65328	7	R22	1/4" NPT

Part No. 65162

Part No. 65328

These resources contain additional technical information about the Swivel X15.

Click or scan the QR code.

Quick Start Guide
QSG-173

Product Instruction
PI-173

Jetting Calculator

TOOLS & NOZZLES

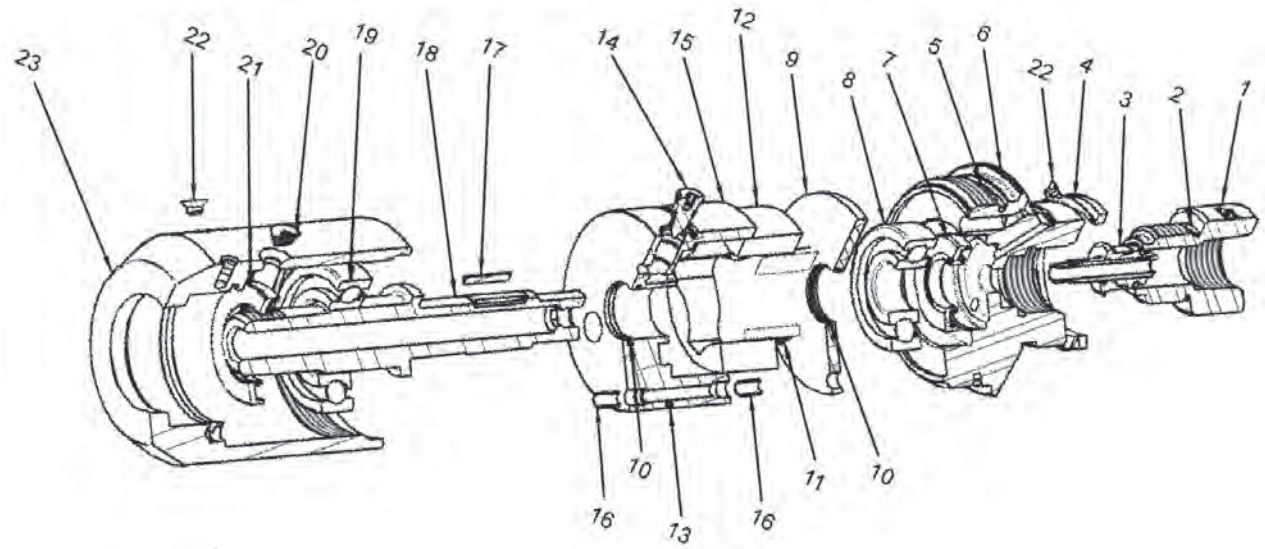

PART BREAKDOWN

ITEM	PART NO.	DESCRIPTION	ITEM	PART NO.	DESCRIPTION	ITEM	PART NO.	DESCRIPTION
1	53397	Seal Cap	11	52762	Inner Rotor	21	27043	Outer Oil Seal
2	25229	O-Ring	12	27040	Outer Rotor	22	64054	Seal Screw
3	53410	15K Seal Assy	13	27204	O-Ring	23	52753	Swivel Body
4	27042	V-ring Seal	14	52757	Speed Adjustment Screw	24*	64180	Oil Kit, 6 oz.
5	65816	O-Ring	15	52764	Oil Pump Body	25**	66199	Syringe Assy
6	53395	Swivel Cap	16	52958	Hollow Dowel	26**	Various***	Nozzle Holder
7	27044	Inner Oil Seal	17	27038	Dowel Pin	27**	52965	Tow Ring
8	27048	Radial Bearing	18	53398	Swivel Shaft	28**	65978	Plug
9	52756	Pump Cover Plate	19	27049	Thrust Bearing			
10	27046	O-Ring	20	52819	Seal Screw			

*Not Shown **Only included with kits. ***See table on previous page.

SWIVEL X15 ACCESSORIES

TOW RING (PN. 52965)

PLUG (PN. 65978)

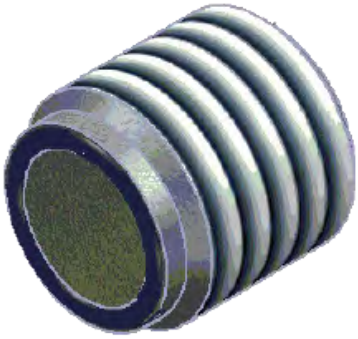

NOZZLE EXTENSIONS

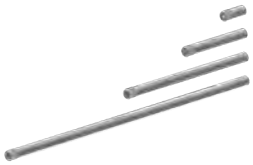

PART NO.	LENGTH (IN.)
65456-02	2
65456-06	6
65456-12	12
65456-24	24
65456-30	30
65456-36	36
65456-42	42

Extensions used with 3/4" ORS nozzle holders.

SWIVEL X15 ACCESSORIES

CENTRALIZERS

- Three models are available.
- Supports the tool while providing a controlled, even cleaning along with damage protection.

SKID STYLE

Used in pipes with and without elbows up to 10 in. (250 mm) in diameter.

PART NO.	DIAMETER	
	in	mm
63842-SWVL-6	6.0	150
63842-SWVL-8	8.0	200
63842-SWVL-10	10.0	250

REPLACEMENT RUNNERS

Three plastic runners and six screws.

PART NO.	DIAMETER	
	in	mm
66104-06	6.0	150
66104-08	8.0	200
66104-10	10.0	250

CAGE STYLE

Recommended for navigating complex piping arrangements to clean built up debris.

PART NO.	DIAMETER	
	in	mm
63843-SWVL	18.75	475

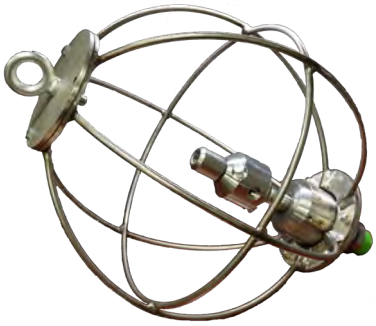

SCISSOR STYLE

Designed for straight pipe runs only. The adjustable frames allow for an effective pipe clean anywhere from 9-60 inches (230-1500 mm) in diameter. Compatible with most tools. Comes with a central lance (shown below) for mounting tools.

PART NO.	CONNECTION	PRESSURE	WEIGHT	LENGTH
SMALL 9-18" [230-460 MM] PIPE DIAMETER				
64452-S15-8	1/2" NPT	15K PSI	20 lb. (9 kg)	36 in. (915 mm)
64452-S15-12	3/4" NPT	15K PSI	20 lb. (9 kg)	36 in. (915 mm)
MEDIUM 13-40" [330-1000MM] PIPE DIAMETER				
64452-M15-8	1/2" NPT	15K PSI	32 lb. (15 kg)	48 in. (1220 mm)
64452-M15-12	3/4" NPT	15K PSI	32 lb. (15 kg)	48 in. (1220 mm)
LARGE 16-60" [410-1500 MM] PIPE DIAMETER				
64452-L15-8	1/2" NPT	15K PSI	40 lb. (18 kg)	72 in. (1850 mm)
64452-L15-12	3/4" NPT	15K PSI	40 lb. (18 kg)	72 in. (1850 mm)

H_3ORBITER™

3-D CLEANING TOOL

The H_3Orbiter (H_3O) is a 3-D waterblasting tool designed to effectively and efficiently clean tanks and vessels. The rotation of the nozzles and body allow the tool to perform a complete 360 degree clean at pressures up to 22,000 psi (1500 bar). Flow rates required are controlled through four different manifold options that provide 10 to 80 gpm (37 to 302 lpm): High Flow, Medium Flow, Low Flow, and Extra Low Flow. A maintenance-free magnetic brake is used to control rotation speed.

- Made from stainless steel
- Enhanced components for longer life
- Rotational speed controlled by a maintenance-free magnetic brake
- Four manifolds offered for application precision: High (50 to 80 gpm), Medium (28 to 55 gpm), Low (16 to 30 gpm), and Extra Low Flow (10 to 18 gpm)
- Wide range of accessories are available including cage centralizers and extensions. Only 1” or 2” extensions can be used when the H_3Orbiter is installed in the centralizer.
- For pipe cleaning, the H_3Orbiter can be placed in a centralizer with an optional kick plate. When installed with the centralizer, the kick plate allows for self generated forward movement with each 180o rotation of the manifold.
- A **Premium Kit (PN. 65634)** and **Starter Kits** (**PN. 65633-XXX**; XXX designates the manifold flow rate) are available for full product tools.
- Premium kit includes the adapters listed in the table below:

Premium Kit (Part No. 65634).

PART NO.	DESCRIPTION
28335	1" MP Male x 1/2" NPT Male
28433	1" MP Male x 1" Type M Male

- A Tool Kit (**PN. 66339**) is available for full servicing tools.

PART NO.	CONNECTION* (MALE)	SPEED RANGE	DIAMETER		ASSEMBLY LENGTH		ASSEMBLY WEIGHT		MAX. FLOW RATE		MAX. OPERATING PRESSURE	
		RPM	in	mm	in	mm	lbs	kg	gpm	lpm	psi	bar
65367	1-1/8" ORS Male	Adjustable; 8-50 rpm	4	100	16.65	423	35	16	80	307	22,000	1500

*Shaft on tool is a 1-1/8" ORS Male connection. Inlet connection is made with female x female adapter, which is not included with the tool. Inlet adapters are listed in the table below. See details on all connection types in Section I.

INLET ADAPTERS

PART NO.	DESCRIPTION
65664	3/4" MP Female
65665	1" MP Female
65666	3/4" NPT Female
65667	1" NPT Female
65233	Replacement O-Ring

1" MP Female (Part No. 65665)

1" NPT Female (Part No. 65667)

MANIFOLD ASSEMBLY

There are four manifold options depending on required flow rate. Consult charts in the Product Instructions/Quick Start Guide to select the correct manifold.

PART NO.	FLOW RATE		DESIGNATION (-XXX)
	gpm	lpm	
65675	50-80	189-303	-030 (R30)
65676	28-55	106-208	-050 (R50)
65677	16-30	61-114	-090 (R90)
65678	10-18	38-68	-150 (R150)

TOW RING
(PART NO. 65729)

NOZZLE EXTENSIONS

PART NO.	LENGTH (IN.)
65456-01	1
65456-02	2
65456-06	6
65456-12	12
65456-24	24
65456-30	30
65456-36	36

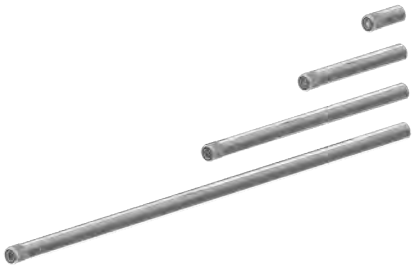

CENTRALIZER
(PN. 63843-H30)

(shown with H_3Orbiter and optional Kick Plate Assy)

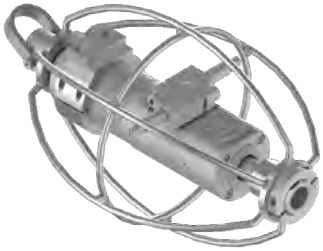

H_3ORBITER™ MAIN ASSEMBLY

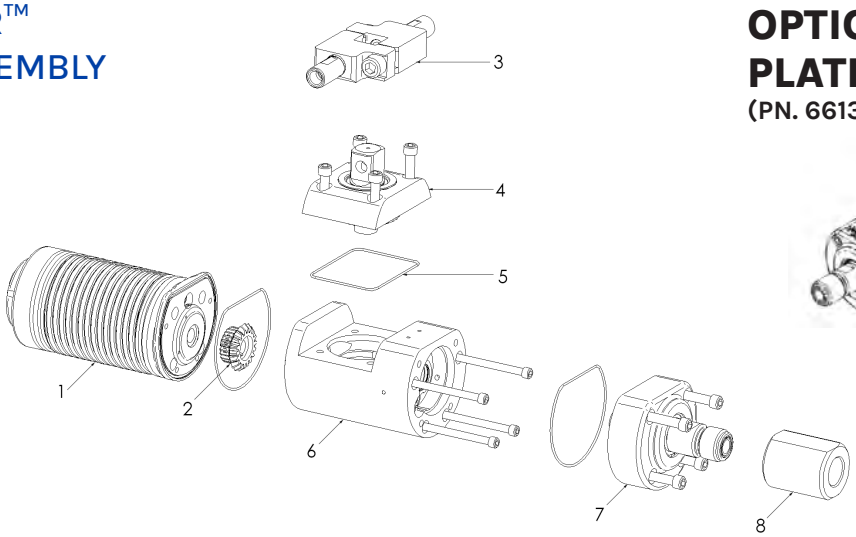

OPTIONAL KICK PLATE ASSY
(PN. 66139)

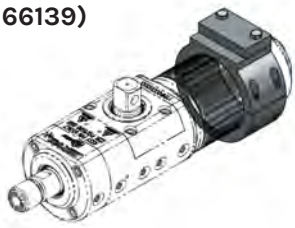

PART BREAKDOWN

ITEM	PART NO.	DESCRIPTION	ITEM	PART NO.	DESCRIPTION
1	66359	Brake Assy	4	66358	Elbow Assy
2	Various*	Manifold Assy	5	66360	Inlet Assy
3	66361	Cross Shaft Assy	6	Various**	Inlet Adapter

*See table above. ** See table on page G-30.

H_3ORBITER™
CROSS SHAFT ASSEMBLY (PART NO. 66361)
PART BREAKDOWN

ITEM	PART NO.	DESCRIPTION
1	65240	Capscrew
2	65229	Retaining Ring
3	65220	Oil Seal, Double Lip
4	65410	Output Shaft Cover
5	65454	O-Ring
6	65215	Ball Bearing, Angular Contact
7	65292	Gear, Bevel
8	65298	Discharge Shaft
9	65645	Seal Assy, Swivel
10	65463	Seat, Carbide
11	65214	Ball Bearing, Deep Groove
12	65230	Retaining Ring
13	65221	Oil Seal, Single Lip

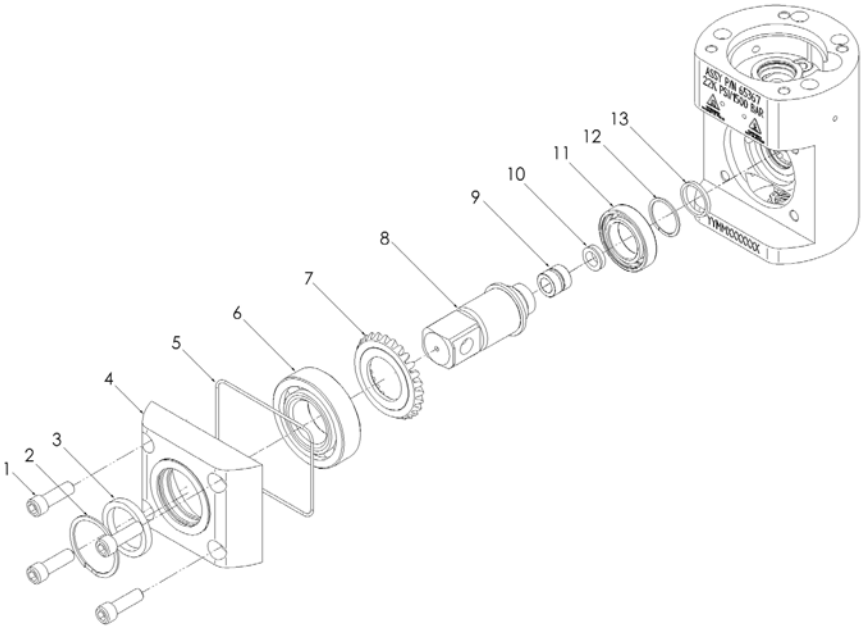

H_3ORBITER
INLET ASSEMBLY (PART NO. 66360)
PART BREAKDOWN

ITEM	PART NO.	DESCRIPTION
1	65239	Capscrew
2	65229	Retaining Ring
3	65220	Oil Seal, Double Lip
4	27492	Grease Zerk
5	65409	Inlet Cap
6	65226	Retaining Ring
7	65217	Ball Bearing, Deep Groove
8	65215	Ball Bearing, Angular Contact
9	65290	Gear, Spur
10	65233	O-Ring
11	65297	Inlet Shaft
12	65645	Seal Assy, Swivel
13	65463	Seat, Carbide
14	65333	Elbow Body

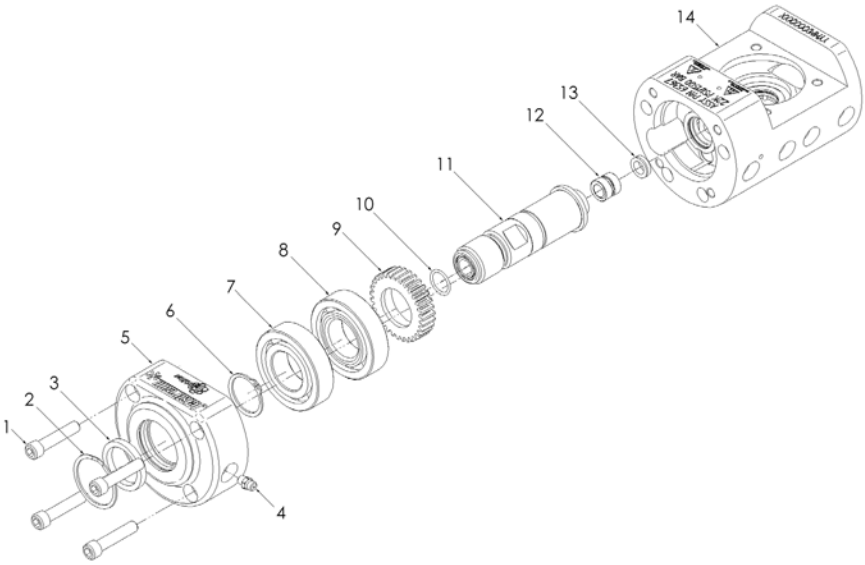

H_3ORBITER™
MANIFOLD ASSEMBLY

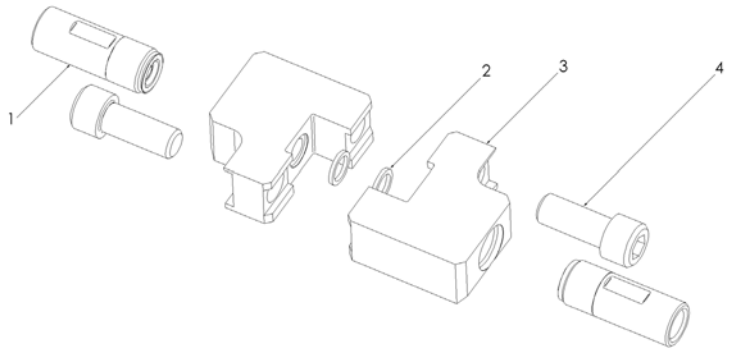

NOZZLE EXTENSION ASSY (ITEM 1)

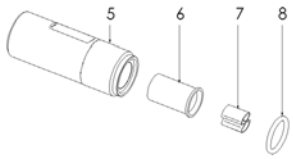

PART BREAKDOWN

ITEM	PART NO.	DESCRIPTION	ITEM	PART NO.	DESCRIPTION
1	65456-XX	Nozzle Extension Assy	5	65300-XX	Nozzle Extension
2	65402	HP Manifold Seal	6	65301	Flow Straightener Insert
3	Various	Half Manifold	7	26871	Vane
4	65250	Capscrew	8	65236	O-Ring

H_3ORBITER
ELBOW ASSEMBLY (PART NO. 66358)

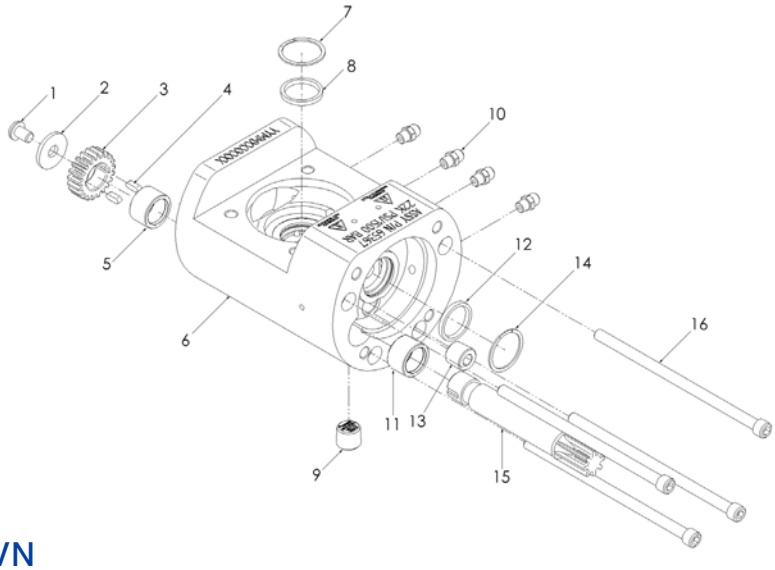

PART BREAKDOWN

ITEM	PART NO.	DESCRIPTION	ITEM	PART NO.	DESCRIPTION
1	25782	Capscrew	9	64682	Plug
2	65248	Flat Washer	10	27492	Grease Zerk
3	65207	Change Gear	11	65218	Needle Bearing
4	65237	Key	12	65221	Oil Seal, Single Lip
5	65218	Needle Bearing	13	64682	Plug
6	65333	Elbow Body	14	65230	Retaining Ring
7	65230	Retaining Ring	15	65291	Shaft, Pinion
8	65221	Oil Seal, Single Lip	16	65241	Capscrew

H_3ORBITER™ BRAKE ASSEMBLY (PART NO. 66359)

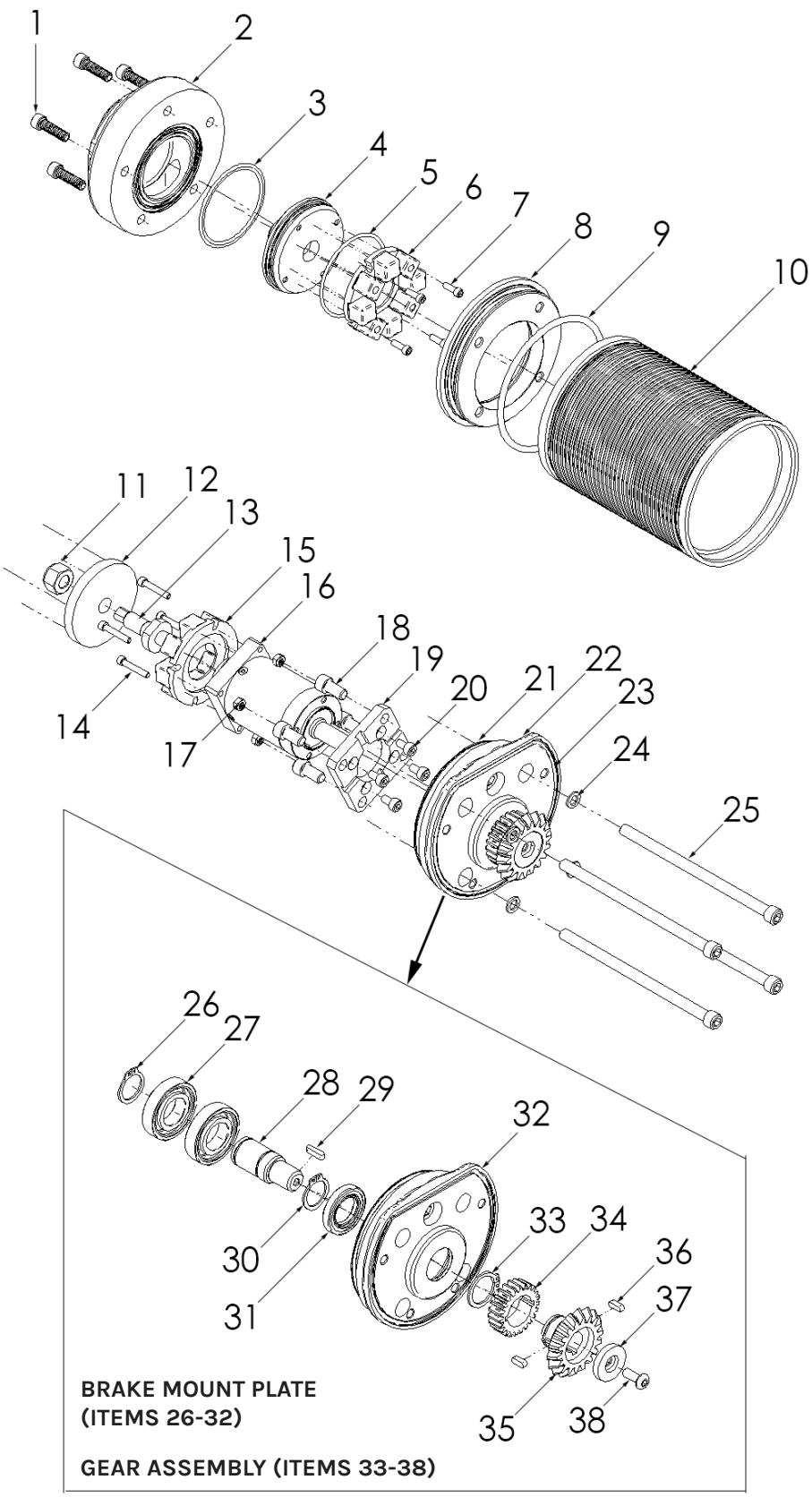

PART BREAKDOWN

ITEM	PART NO.	DESCRIPTION	ITEM	PART NO.	DESCRIPTION
1	65453	Capscrew	20	65242	Capscrew
2	65414	Cap, Pulling Ring	21	65816	O-Ring
3	57927 / 65234	O-Rings	22	65411	Brake Mount Plate
4	65415	Cap, Speed Adjust	23	65454	O-Ring
5	57927	O-Ring	24	65247	Copper Seal Washer
6	65455	Magnetic Brake Assy 1	25	65452	Capscrew
7	65243	Capscrew	26	65227	Retaining Ring
8	65413	Lower Brake Cover	27	65216	Ball Bearing, Deep Groove
9	65816	O-Ring	28	65416	Brake Input Shaft
10	65412	Brake Housing	29	65238	Key
11	25296	Nut	30	65227	Retaining Ring
12	65420	Brake Rotor	31	65219	Oil Seal, Double Lip
13	65419	Shaft, Brake Rotor	32	65411	Brake Mount Plate
14	65244	Capscrew	33	65228	Retaining Ring
15	65455	Magnetic Brake Assy 2	34	65289	Brake Spur Gear
16	65213	Gearbox	35	65293	Brake Bevel Gear
17	65246	Nut	36	65237	Key
18	25782	Capscrew	37	65421	Gearbox Input Retainer
19	65417	Gearbox Adapter Plate	38	65245	Capscrew

These resources contain additional technical information about the H_3Orbiter™.

Click or scan the QR code.

Quick Start Guide
QSG-177

Product Instruction
PI-177

Jetting Calculator

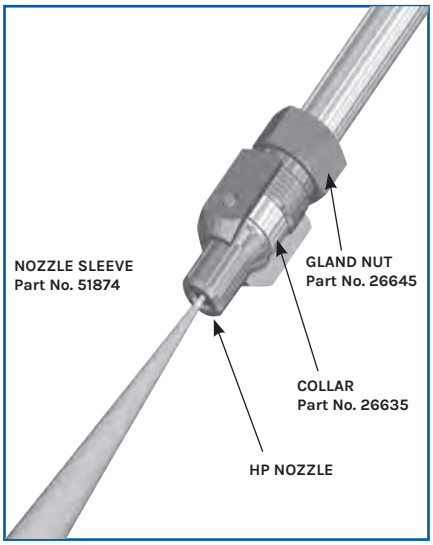

HP SURFACE CLEANING NOZZLES

HP Series Nozzles nozzles produce well defined, hard hitting jets for concentrated, work saving cleaning power.

- Available with carbide **(HP0 and HP15)** or sapphire **(HPSO)** orifices.
- Attach directly to the end of any control gun or nipple that uses a 9/16" medium pressure male connection.
- 20,000 psi (1,379 bar) maximum working pressure.

HP0 CARBIDE NOZZLES

- Tungsten carbide orifice inserts significantly outlast conventional nozzle orifice material
- Tapered geometry provides highly cohesive, distortion-free waterjets for concentrated, work saving cleaning and cutting power
- Straight (0°) patterns
- 9/16 MP Male connection*
- 22,000 psi (1516 bar) maximum working pressure

HP0 STRAIGHT JET	
PART NO.**	
HP0-018	HP0-073
HP0-020	HP0-075
HP0-022	HP0-078
HP0-024	HP0-082
HP0-026	HP0-090
HP0-029	HP0-093
HP0-032	HP0-098
HP0-035	HP0-106
HP0-038	HP0-110
HP0-042	HP0-115
HP0-047	HP0-125
HP0-052	HP0-135
HP0-057	HP0-145
HP0-063	HP0-155
HP0-067	HP0-165
HP0-069	

*See details on all connection types in Section I.
**Orifice size (or equivalent for fan types) is denoted in the part number (-018, etc.)
For nozzle flow rates, see Orifice Group C chart, page G-44.

HP15 CARBIDE NOZZLES

- Tungsten carbide orifice inserts significantly outlast conventional nozzle orifice material
- Tapered geometry provides highly cohesive, distortion-free waterjets for concentrated, work saving cleaning and cutting power
- Fan (15°) patterns create wide waterjets without significant reduction in power.
- 9/16 MP Male connection*
- 22,000 psi (1516 bar) maximum working pressure

HP15 FAN JET

PART NO.**
HP15-029
HP15-038
HP15-042
HP15-047
HP15-057
HP15-063
HP15-067
HP15-069
HP15-073
HP15-078

*See details on all connection types in Section I.
**Orifice size (or equivalent for fan types) is denoted in the part number (-018, etc.)
For nozzle flow rates, see Orifice Group C chart, page G-44.

HPS0 SAPPHIRE NOZZLES

- Sapphire orifice inserts more durable than carbide for longer service life and lower operating cost
- Tapered geometry provides highly cohesive, distortion-free waterjets for concentrated, work saving cleaning and cutting power
- Straight (0°) patterns
- 9/16 MP Male connection*
- 22,000 psi (1516 bar) maximum working pressure

HPS0 STRAIGHT JET

PART NO.**
HPS0-018
HPS0-025
HPS0-029
HPS0-033
HPS0-038
HPS0-042
HPS0-046
HPS0-052

*See details on all connection types in Section I.
For nozzle flow rates, see Orifice Group C chart, page G-44.

REPLACEABLE NOZZLE TIPS — QUICK REFERENCE CHART

NOZZLE SIDE VIEW	NOZZLE	CONNECTION*	TYPE/USE	ORIFICE MATERIAL	PATTERNS	PAGE
	HHTC0	1/4" NPT Male	Hard Hitter	Tungsten Carbide	Straight	G-47
	HHTC15				15° Fan	
	HHTC25				25° Fan	
	HHTC50				50° Fan	
	HHS0	1/4" NPT Male	Hard Hitter	Sapphire	Straight	G-48
	HHD	1/4" NPT Male	Hard Hitter	Synthetic Diamond	Straight	G-48
	P4TC	1/4" NPT Male	Low Profile	Tungsten Carbide	Straight	G-53
	P2TC	1/8" NPT Male	Low Profile	Tungsten Carbide	Straight	G-53
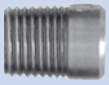	P2TCS	1/8" NPT Male	Low Profile	Tungsten Carbide	Straight	G-54
	JS2	1/8" NPT Male	Low Profile	Stainless Steel	Straight	G-54
	JS2D	1/8" NPT Male	Low Profile	Synthetic Diamond	Straight	G-55
	JS4	1/4" NPT Male	Hard Hitter	Stainless Steel	Straight	G-55
	JS4F	1/4" NPT Male	Low Profile	Stainless Steel	Straight	G-56
	JS4FD	1/4" NPT Male	Low Profile	Synthetic Diamond	Straight	G-56
	HP0/ HP15	9/16" MP Male	Hard Hitter	Tungsten Carbide	Straight 15° Fan	G-36 / G-37
	HPS0	9/16" MP Male	Hard Hitter	Sapphire	Straight	G-37
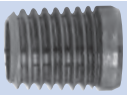	P1	1/16" NPT Male	Low Profile	Stainless Steel	Straight	G-49
	P1S0	1/16" NPT Male	Low Profile	Sapphire	Straight	G-57
	OX	3/8" - 24UNEF	Orbi-Jet™ X22	Tungsten Carbide	Straight	G-3
	UHPX	3/8" - 24UNF	Orbi-Jet™ X22	Sapphire	Straight	G-50
	UHPXD	3/8" - 24 UNF	Orbi-Jet™ X22	Synthetic Diamond	Straight	G-51
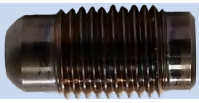	UHPXi	3/8" - 24 UNF	Orbi-Jet™ X22	Sapphire	Straight	G-52
	RM	1/2" - 28UNEF	RotoMag™ X22	Tungsten Carbide	Straight	G-57
	RMD	1/2" - 28UNEF	RotoMag™ X22	Synthetic Diamond	Straight	G-58
	RMS	1/2" - 28UNEF	RotoMag™ X22	Sapphire	Straight	G-58

*See details on all connection types in Section I.

TOOLS & NOZZLES

REPLACEABLE NOZZLE TIPS

ORIFICE GROUP A

HHS0/HHD
(PAGE G-48)

JS2D
(PAGE G-55)

w
(PAGE G-56)

P1S0
(PAGE G-57)

RMD/RMS
(PAGE G-58)

UHPX/UHPXD/UHPXi
(PAGE G-50/G-51/G-52)

ORIFICE SIZE*		FLOW AT SPECIFIED PRESSURES (PSI / BAR)								AVAILABLE SERIES									
in	mm	5,000 gpm	344 lpm	6,000 gpm	413 lpm	8,000 gpm	551 lpm	10,000 gpm	689 lpm	HHS0	HHD	JS2D	JS4FD	P1S0	RMD	RMS	UHPX	UHPXD	UHPXi
.005	.13	0.04	0.1	0.04	0.2	0.04	0.2	0.1	0.2								•	•	•
.006	.15	0.1	0.2	0.1	0.2	0.1	0.2	0.1	0.3								•	•	•
.007	.17	0.1	0.3	0.1	0.3	0.1	0.3	0.1	0.4								•	•	•
.008	.20	0.1	0.3	0.1	0.4	0.1	0.4	0.1	0.5								•	•	•
.009	.22	0.1	0.4	0.1	0.5	0.1	0.6	0.2	0.6								•	•	•
.010	.25	0.1	0.5	0.2	0.6	0.2	0.7	0.2	0.8								•	•	•
.011	.27	0.2	0.7	0.2	0.7	0.2	0.8	0.2	0.9								•	•	•
.012	.30	0.2	0.8	0.2	0.8	0.3	1.0	0.3	1.1								•	•	•
.013	.33	0.2	0.9	0.3	1.0	0.3	1.1	0.3	1.3								•	•	•
.014	.35	0.3	1.1	0.3	1.2	0.4	1.3	0.4	1.5								•	•	•
.015	.38	0.3	1.2	0.4	1.3	0.4	1.5	0.5	1.7								•	•	•
.016	.40	0.4	1.4	0.4	1.5	0.5	1.7	0.5	1.9								•	•	•
.017	.43	0.4	1.6	0.5	1.7	0.5	2.0	0.6	2.2								•	•	•
.018	.45	0.5	1.7	0.5	1.9	0.6	2.2	0.6	2.5			•		•	•	•	•	•	•
.019	.48	0.5	1.9	0.6	2.1	0.7	2.4	0.7	2.7								•	•	•
.020	.50	0.6	2.1	0.6	2.4	0.7	2.7	0.8	3.0			•					•	•	•
.021	.53	0.6	2.4	0.7	2.6	0.8	3.0	0.9	3.3								•	•	•
.022	.55	0.7	2.6	0.8	2.8	0.9	3.3	1.0	3.7			•					•	•	•
.023	.58	0.8	2.8	0.8	3.1	1.0	3.6	1.1	4.0								•	•	•
.024	.60	0.8	3.1	0.9	3.4	1.1	3.9	1.2	4.4			•					•	•	•
.025	.63	0.9	3.4	1.0	3.7	1.1	4.2	1.3	4.7	•				•	•	•	•	•	•
.026	.66	1.0	3.6	1.1	4.0	1.2	4.6	1.4	5.1			•					•	•	•
.027	.68	1.0	3.9	1.1	4.3	1.3	4.9	1.5	5.5								•	•	•
.028	.71	1.1	4.2	1.2	4.6	1.4	5.3	1.6	5.9								•	•	•
.029	.73	1.2	4.5	1.3	4.9	1.5	5.7	1.7	6.4	•		•		•	•	•	•	•	•
.030	.76	1.3	4.8	1.4	5.3	1.6	6.1	1.8	6.8								•	•	•
.031	.78	1.4	5.1	1.5	5.6	1.7	6.5	1.9	7.3								•	•	•
.032	.81	1.5	5.5	1.6	6.0	1.8	6.9	2.0	7.8			•	•				•	•	•
.033	.83	1.5	5.8	1.7	6.4	2.0	7.4	2.2	8.2	•				•	•	•	•	•	•
.034	.86	1.6	6.2	1.8	6.8	2.0	7.8	2.3	8.8								•	•	•
.035	.89	1.7	6.6	1.9	7.2	2.2	8.3	2.5	9.3			•	•				•	•	•
.036	.91	1.8	6.9	2.0	7.6	2.3	8.8	2.6	9.8								•	•	•
.037	.93	1.9	7.3	2.1	8.0	2.5	9.3	2.7	10.4								•	•	•
.038	.96	2.0	7.7	2.2	8.5	2.6	9.8	2.9	10.9	•	•	•	•	•	•	•	•	•	•
.039	.99	2.2	8.1	2.4	8.9	2.7	10.3	3.0	11.5								•	•	•
.040	1.02	2.3	8.6	2.5	9.4	2.7	10.8	3.2	12.1								•	•	•
.042	1.06	2.5	9.4	2.7	10.3	3.2	11.9	3.5	13.4	•	•	•	•	•	•	•	•	•	•
.046	1.16	3.0	11.3	3.3	12.4	3.8	14.3	4.2	16.0	•	•			•	•	•	•	•	•
.047	1.19	3.1	11.8	3.4	13.0	4.0	15.0	4.4	16.7		•		•						
.052	1.32	3.8	14.5	4.2	16.0	4.8	18.0	5.4	20.5		•	•	•	•	•	•	•	•	•
.055	1.40	4.3	16.2	4.7	17.7	5.4	20.5	6.1	22.9	•									
.057	1.45	4.6	17.4	5.0	19.0	5.8	22.0	6.5	24.6		•	•	•						
.063	1.60	5.6	21.3	6.2	23.3	7.1	26.9	7.9	30.0		•	•							
.067	1.70	6.3	24.0	7.0	26.0	8.0	30.0	9.0	34.0		•						•	•	•
.069	1.75	6.7	25.5	7.4	27.9	8.5	32.2	9.5	36.0		•								
.073	1.85	7.5	28.5	8.3	31.3	9.5	36.1	10.7	40.3		•								
.075	1.90	8.0	30.1	8.7	33.0	10.1	38.1	11.3	42.6				•						
.078	1.98	8.6	32.6	9.4	35.7	10.9	41.2	12.2	46.1		•	•							

*Orifice size (or equivalent for fan types) is denoted in the part number (-018, etc.)

REPLACEABLE NOZZLE TIPS

ORIFICE GROUP A

HHS0/HHD
(PAGE G-48)

JS2D
(PAGE G-55)

JS4FD
(PAGE G-56)

P1S0
(PAGE G-57)

RMD/RMS
(PAGE G-58)

UHPX/UHPXD/UHPXi
(PAGE G-50/G-51/G-52)

ORIFICE SIZE*		FLOW AT SPECIFIED PRESSURES (PSI / BAR)								AVAILABLE SERIES									
in	mm	11,000 gpm	758 lpm	12,000 gpm	827 lpm	14,000 gpm	965 lpm	15,000 gpm	1034 lpm	HHS0	HHD	JS2D	JS4FD	P1S0	RMD	RMS	UHPX	UHPXD	UHPXi
.005	.13	0.1	0.2	0.1	0.2	0.1	0.2	0.1	0.2								•	•	•
.006	.15	0.1	0.3	0.1	0.3	0.1	0.3	0.1	0.3								•	•	•
.007	.17	0.1	0.4	0.1	0.4	0.1	0.4	0.1	0.5								•	•	•
.008	.20	0.1	0.5	0.1	0.5	0.1	0.6	0.2	0.6								•	•	•
.009	.22	0.2	0.6	0.2	0.7	0.2	0.7	0.2	0.8								•	•	•
.010	.25	0.2	0.8	0.2	0.8	0.2	0.9	0.2	0.9								•	•	•
.011	.27	0.3	1.0	0.3	1.0	0.3	1.1	0.3	1.1								•	•	•
.012	.30	0.3	1.1	0.3	1.2	0.3	1.3	0.4	1.3								•	•	•
.013	.33	0.4	1.3	0.4	1.4	0.4	1.5	0.4	1.6								•	•	•
.014	.35	0.4	1.6	0.4	1.6	0.5	1.8	0.5	1.8								•	•	•
.015	.38	0.5	1.8	0.5	1.9	0.5	2.0	0.6	2.1								•	•	•
.016	.40	0.5	2.0	0.6	2.1	0.6	2.3	0.6	2.4								•	•	•
.017	.43	0.6	2.3	0.6	2.4	0.7	2.6	0.7	2.7								•	•	•
.018	.45	0.7	2.6	0.7	2.7	0.8	2.9	0.8	3.0			•		•	•	•	•	•	•
.019	.48	0.8	2.9	0.8	3.0	0.9	3.2	0.9	3.3								•	•	•
.020	.50	0.8	3.2	0.9	3.3	1.0	3.6	1.0	3.7			•					•	•	•
.021	.53	0.9	3.5	1.0	3.7	1.0	4.0	1.1	4.1								•	•	•
.022	.55	1.0	3.8	1.1	4.0	1.2	4.3	1.2	4.5			•					•	•	•
.023	.58	1.1	4.2	1.2	4.4	1.3	4.7	1.3	4.9								•	•	•
.024	.60	1.2	4.6	1.3	4.8	1.4	5.2	1.4	5.3			•					•	•	•
.025	.63	1.3	5.0	1.4	5.2	1.5	5.6	1.5	5.8	•				•	•	•	•	•	•
.026	.66	1.4	5.6	1.5	5.6	1.6	6.1	1.7	6.3			•					•	•	•
.027	.68	1.5	5.8	1.6	6.0	1.7	6.5	1.8	6.8								•	•	•
.028	.71	1.6	6.2	1.7	6.5	1.9	7.0	1.9	7.3								•	•	•
.029	.73	1.8	6.7	1.8	7.0	2.0	7.5	2.1	7.8	•		•		•	•	•	•	•	•
.030	.76	1.9	7.2	2.0	7.5	2.1	8.1	2.2	8.3								•	•	•
.031	.78	2.0	7.6	2.1	8.0	2.3	8.6	2.4	8.9								•	•	•
.032	.81	2.2	8.1	2.2	8.5	2.4	9.2	2.5	9.5			•	•				•	•	•
.033	.83	2.3	8.7	2.4	9.0	2.6	9.8	2.7	10.1	•				•	•	•	•	•	•
.034	.86	2.4	9.2	2.5	9.6	2.7	10.4	2.8	10.7								•	•	•
.035	.89	2.6	9.7	2.7	10.2	2.9	11.0	3.0	11.4			•	•				•	•	•
.036	.91	2.7	10.3	2.8	10.7	3.1	11.6	3.2	12.0								•	•	•
.037	.93	2.9	10.9	3.0	11.4	3.2	12.3	3.4	12.7								•	•	•
.038	.96	3.0	11.5	3.2	12.0	3.4	12.9	3.5	13.4	•	•	•	•	•	•	•	•	•	•
.039	.99	3.2	12.1	3.3	12.6	3.6	13.6	3.7	14.1								•	•	•
.040	1.02	3.4	12.7	3.5	13.3	3.8	14.3	3.9	14.8								•	•	•
.042	1.06	3.7	14.0	3.9	14.6	4.2	15.8	4.3	16.4	•	•	•	•	•	•	•	•	•	•
.046	1.16	4.4	16.8	4.6	17.5	5.0	19.0	5.2	19.6	•	•			•	•	•	•	•	•
.047	1.19	4.6	17.5	4.8	18.3	5.2	19.8	5.4	20.5		•		•						
.052	1.32	5.7	21.0	5.9	22.0	6.4	24.0	6.6	25.1		•	•	•	•	•	•	•	•	•
.055	1.40	6.4	24.0	6.6	25.1	7.2	27.1	7.4	28.0	•									
.057	1.45	6.8	25.8	7.1	26.9	7.7	29.1	8.0	30.1		•	•	•						
.063	1.60	8.3	31.5	8.7	32.9	9.4	35.6	9.7	36.8		•	•							
.067	1.70	9.4	36.0	9.8	37.0	11.0	40.0	11.0	41.6		•						•	•	•
.069	1.75	10.0	37.8	10.4	39.5	11.3	42.6	11.7	44.1		•								
.073	1.85	11.2	42.3	11.7	44.2	12.6	47.7	13.1	49.4		•								
.075	1.90	11.8	44.7	12.3	46.6	13.3	50.4	13.8	52.2				•						
.078	1.98	12.8	48.3	13.3	50.5	14.4	54.5	14.9	56.4		•	•							

*Orifice size (or equivalent for fan types) is denoted in the part number (-018, etc.)

REPLACEABLE NOZZLE TIPS

ORIFICE GROUP B

JS2
(PAGE G-43)

P1
(PAGE G-49)

P2TCS
(PAGE G-54)

ORIFICE SIZE*		FLOW AT SPECIFIED PRESSURES (PSI / BAR)																AVAILABLE SERIES		
in	mm	5,000 gpm	344 lpm	6,000 gpm	413 lpm	8,000 gpm	551 lpm	10,000 gpm	689 lpm	11,000 gpm	758 lpm	12,000 gpm	827 lpm	14,000 gpm	965 lpm	15,000 gpm	1034 lpm	JS2	P1	P2TCS
.018	.46	0.6	2.1	0.6	2.3	0.7	2.7	0.8	3.0	0.8	3.2	0.9	3.3	0.9	3.6	1.0	3.7	•		•
.020	.51	0.7	2.6	0.8	2.9	0.9	3.3	1.0	3.7	1.0	3.9	1.1	4.1	1.2	4.4	1.2	4.5	•		•
.022	.56	0.8	3.2	0.9	3.5	1.1	4.0	1.2	4.5	1.2	4.7	1.3	4.9	1.4	5.3	1.5	5.5	•		•
.024	.61	1.0	3.8	1.1	4.1	1.3	4.8	1.4	5.3	1.5	5.6	1.5	5.9	1.7	6.3	1.7	6.5	•		•
.026	.66	1.2	4.4	1.3	4.9	1.5	5.6	1.7	6.3	1.7	6.6	1.8	6.9	2.0	7.4	2.0	7.7	•		•
.029	.74	1.5	5.5	1.6	6.0	1.8	7.0	2.1	7.8	2.2	8.2	2.3	8.5	2.4	9.2	2.5	9.6	•		•
.032	.81	1.8	6.7	1.9	7.4	2.2	8.5	2.5	9.5	2.6	10.0	2.7	10.4	3.0	11.2	3.1	11.6	•		•
.035	.89	2.1	8.0	2.3	8.8	2.7	10.2	3.0	11.4	3.1	11.9	3.3	12.4	3.6	13.4	3.7	13.9	•		•
.038	.97	2.5	9.5	2.7	10.4	3.2	12.0	3.5	13.4	3.7	14.0	3.9	14.7	4.2	15.8	4.3	16.4	•	•	•
.042	1.07	3.1	11.6	3.3	12.7	3.9	14.6	4.3	16.4	4.5	17.2	4.7	17.9	5.1	19.4	5.3	20.0	•	•	•
.046	1.16	3.7	13.9	4.0	15.2	4.6	17.6	5.2	19.6	5.4	20.6	5.7	21.5	6.1	23.2	6.3	24.0		•	
.047	1.19	3.8	14.5	4.2	15.9	4.8	18.3	5.4	20.5	5.7	21.5	5.9	22.4	6.4	24.2	6.6	25.1	•		•
.052	1.32	4.7	17.7	5.1	19.4	5.9	22.4	6.6	25.1	6.9	26.3	7.3	27.5	7.8	29.7	8.1	30.7	•		•
.055	1.40	5.2	19.8	5.7	21.7	6.6	25.1	7.4	28.1	7.8	29.4	8.1	30.7	8.8	33.2	9.1	34.4		•	
.057	1.45	5.6	21.3	6.2	23.3	7.1	26.9	8.0	30.1	8.3	31.6	8.7	33.0	9.4	35.6	9.7	36.9	•		•
.063	1.60	6.9	26.0	7.5	28.5	8.7	32.9	9.7	36.8	10.2	38.6	10.7	40.3	11.5	43.5	11.9	45.1	•	•	•
.067	1.70	7.8	29.4	8.5	32.2	9.8	37.2	11.0	41.6	11.5	43.7	12.0	45.6	13.0	49.3	13.5	51.0		•	•
.069	1.75	8.2	31.2	9.0	34.2	10.4	39.5	11.7	44.1	12.2	46.3	12.8	48.4	13.8	52.2	14.3	54.1	•		•
.070	1.78	8.5	32.1	9.3	35.2	10.7	40.6	12.0	45.4	12.6	47.7	13.2	49.8	14.2	53.8	14.7	55.7		•	
.073	1.85	9.2	34.9	10.1	38.3	11.7	44.2	13.1	49.4	13.7	51.8	14.3	54.1	15.4	58.5	16.0	60.5		•	•
.075	1.91	9.7	36.9	10.7	40.4	12.3	46.7	13.8	52.2	14.5	54.7	15.1	57.1	16.3	61.7	16.9	63.9	•		•
.078	1.98	10.5	39.9	11.5	43.7	13.3	50.5	14.9	56.4	15.6	59.2	16.3	61.8	17.6	66.8	18.3	69.1		•	•
.082	2.08	11.6	44.1	12.8	48.3	14.7	55.8	16.5	62.4	17.3	65.4	18.0	68.3	19.5	73.8	20.2	76.4	•		•
.090	2.29	14.0	53.1	15.4	58.2	17.7	67.2	19.8	75.1	20.8	78.8	21.7	82.3	23.5	88.9	24.3	92.0	•		•
.093	2.36	15.0	56.7	16.4	62.1	19.0	71.7	21.2	80.2	22.2	84.1	23.2	87.9	25.1	94.9	26.0	98.2			•
.098	2.49	16.6	63.0	18.2	69.0	21.0	79.7	23.5	89.1	24.7	93.4	25.8	97.6	27.8	105.4	28.8	109.1	•		•
.106	2.69	19.5	73.7	21.3	80.7	24.6	93.2	27.5	104.2	28.9	109.3	30.2	114.1	32.6	123.3	33.7	127.6	•		•
.110	2.79	21.0	79.3	23.0	86.9	26.5	100.4	29.6	112.2	31.1	117.7	32.5	122.9	35.1	132.8	36.3	137.4			•
.115	2.92	22.9	86.7	25.1	95.0	29.0	109.7	32.4	122.6	34.0	128.6	35.5	134.3	38.3	145.1	39.7	150.2	•		•
.125	3.18	27.1	102.5	29.7	112.2	34.2	129.6	38.3	144.9	40.1	152.0	41.9	158.7	45.3	171.4	46.9	177.5	•		•
.135	3.43	31.6	119.5	34.6	130.9	39.9	151.2	44.7	169.0	46.8	177.3	48.9	185.1	52.8	200.0	54.7	207.0	•		
.145	3.68	36.4	137.9	39.9	151.0	46.1	174.4	51.5	195.0	54.0	204.5	56.4	213.6	60.9	230.7	63.1	238.8	•		

*Orifice size (or equivalent for fan types) is denoted in the part number (-018, etc.)

ORIFICE GROUP C

HHTC
(PAGE G-47)

HP
(PAGE G-36)

JS4
(PAGE G-55)

JS4F
(PAGE G-56)

P2TC
(PAGE G-53)

P4TC
(PAGE G-53)

RM
(PAGE G-57)

ORIFICE SIZE*		FLOW AT SPECIFIED PRESSURES (PSI / BAR)								AVAILABLE SERIES						
in	mm	5,000 gpm	344 lpm	6,000 gpm	413 lpm	8,000 gpm	551 lpm	10,000 gpm	689 lpm	HHTC	HP	JS4	JS4F	P2TC	P4TC	RM
.018	0.46	0.6	2.3	0.7	2.6	0.8	3.0	0.9	3.3	•	•	•	•	•	•	•
.020	0.51	0.8	2.9	0.8	3.2	1.0	3.7	1.1	4.1	•	•	•	•	•	•	•
.022	0.56	0.9	3.5	1.0	3.8	1.2	4.4	1.3	4.9	•	•	•	•	•	•	•
.024	0.61	1.1	4.2	1.2	4.6	1.4	5.3	1.6	5.9	•	•	•	•	•	•	•
.026	0.66	1.3	4.9	1.4	5.4	1.6	6.2	1.8	6.9	•	•	•	•	•	•	•
.029	0.74	1.6	6.1	1.8	6.7	2.0	7.7	2.3	8.6	•	•	•	•	•	•	•
.032	0.81	2.0	7.4	2.1	8.1	2.5	9.4	2.8	10.5	•	•	•	•	•	•	•
.035	0.89	2.3	8.9	2.6	9.7	3.0	11.2	3.3	12.5	•	•	•	•	•	•	•
.038	0.97	2.8	10.4	3.0	11.4	3.5	13.2	3.9	14.8	•	•	•	•	•	•	•
.042	1.07	3.4	12.7	3.7	14.0	4.3	16.1	4.8	18.0	•	•	•	•	•	•	•
.047	1.19	4.2	16.0	4.6	17.5	5.3	20.2	6.0	22.6	•	•	•	•	•	•	•
.052	1.32	5.2	19.5	5.7	21.4	6.5	24.7	7.3	27.6	•	•	•	•	•	•	•
.057	1.45	6.2	23.5	6.8	25.7	7.8	29.7	8.8	33.2	•	•	•	•	•	•	•
.063	1.60	7.6	28.7	8.3	31.4	9.6	36.3	10.7	40.6	•	•	•	•	•	•	•
.067	1.70	8.6	32.4	9.4	35.5	10.8	41.0	12.1	45.9	•	•			•	•	•
.069	1.75	9.1	34.4	10.0	37.7	11.5	43.5	12.9	48.7	•	•	•	•	•	•	•
.073	1.85	10.2	38.5	11.1	42.2	12.9	48.7	14.4	54.5	•	•			•	•	•
.075	1.90	10.7	40.6	11.8	44.5	13.6	51.4	15.2	57.5	•	•	•	•	•	•	•
.078	1.98	11.6	44.0	12.7	48.2	14.7	55.6	16.4	62.2	•	•			•	•	•
.082	2.08	12.8	48.6	14.1	53.2	16.2	61.5	18.2	68.7	•	•	•	•	•	•	•
.090	2.29	15.5	58.5	16.9	64.1	19.6	74.0	21.9	82.8	•	•	•	•	•	•	•
.093	2.36	16.5	62.5	18.1	68.5	20.9	79.1	23.4	88.4	•	•			•	•	•
.098	2.49	18.3	69.4	20.1	76.0	23.2	87.8	25.9	98.1	•	•	•	•	•	•	•
.106	2.69	21.5	81.2	23.5	88.9	27.1	102.7	30.3	114.8	•	•	•	•	•	•	•
.110	2.79	23.1	87.4	25.3	95.8	29.2	110.6	32.7	123.7	•	•			•	•	•
.115	2.92	25.2	95.6	27.7	104.7	31.9	120.9	35.7	135.2	•	•	•	•	•	•	•
.125	3.18	29.8	112.9	32.7	123.7	37.7	142.8	42.2	159.7	•	•	•	•	•	•	•
.135	3.43	34.8	131.7	38.1	144.3	44.0	166.6	49.2	186.3	•	•	•	•	•	•	•
.145	3.68	40.1	151.9	44.0	166.4	50.8	192.2	56.8	214.9	•	•	•	•	•	•	•
.155	3.94	45.9	173.6	50.2	190.2	58.0	219.6	64.9	245.5	•	•	•	•	•	•	•
.165	4.19	52.0	196.7	56.9	215.5	65.7	248.9	73.5	278.2	•	•	•	•	•	•	•

*Orifice size (or equivalent for fan types) is denoted in the part number (-018, etc.)

ORIFICE GROUP C

HHTC
(PAGE G-47)

HP
(PAGE G-36)

JS4
(PAGE G-55)

JS4F
(PAGE G-56)

P2TC
(PAGE G-53)

P4TC
(PAGE G-53)

RM
(PAGE G-57)

ORIFICE SIZE*		FLOW AT SPECIFIED PRESSURES (PSI / BAR)								AVAILABLE SERIES						
in	mm	11,000	758	12,000	827	14,000	965	15,000	1034	HHTC	HP	JS4	JS4F	P2TC	P4TC	RM
		gpm	lpm	gpm	lpm	gpm	lpm	gpm	lpm							
.018	0.46	0.9	3.5	1.0	3.6	1.0	3.9	1.1	4.1	•	•	•	•	•	•	•
.020	0.51	1.1	4.3	1.2	4.5	1.3	4.8	1.3	5.0	•	•	•	•	•	•	•
.022	0.56	1.4	5.2	1.4	5.4	1.5	5.9	1.6	6.1	•	•	•	•	•	•	•
.024	0.61	1.6	6.2	1.7	6.4	1.8	7.0	1.9	7.2	•	•	•	•	•	•	•
.026	0.66	1.9	7.2	2.0	7.6	2.2	8.2	2.2	8.5	•	•	•	•	•	•	•
.029	0.74	2.4	9.0	2.5	9.4	2.7	10.2	2.8	10.5	•	•	•	•	•	•	•
.032	0.81	2.9	11.0	3.0	11.5	3.3	12.4	3.4	12.8	•	•	•	•	•	•	•
.035	0.89	3.5	13.1	3.6	13.7	3.9	14.8	4.1	15.3	•	•	•	•	•	•	•
.038	0.97	4.1	15.5	4.3	16.2	4.6	17.5	4.8	18.1	•	•	•	•	•	•	•
.042	1.07	5.0	18.9	5.2	19.7	5.6	21.3	5.8	22.1	•	•	•	•	•	•	•
.047	1.19	6.3	23.7	6.5	24.7	7.1	26.7	7.3	27.6	•	•	•	•	•	•	•
.052	1.32	7.7	29.0	8.0	30.3	8.6	32.7	8.9	33.8	•	•	•	•	•	•	•
.057	1.45	9.2	34.8	9.6	36.4	10.4	39.3	10.7	40.7	•	•	•	•	•	•	•
.063	1.60	11.2	42.5	11.7	44.4	12.7	48.0	13.1	49.7	•	•	•	•	•	•	•
.067	1.70	12.7	48.1	13.3	50.3	14.3	54.3	14.8	56.2	•	•			•	•	•
.069	1.75	13.5	51.0	14.1	53.3	15.2	57.6	15.7	59.6	•	•	•	•	•	•	•
.073	1.85	15.1	57.1	15.8	59.7	17.0	64.4	17.6	66.7	•	•			•	•	•
.075	1.90	15.9	60.3	16.6	63.0	18.0	68.0	18.6	70.4	•	•	•	•	•	•	•
.078	1.98	17.2	65.2	18.0	68.1	19.4	73.6	20.1	76.1	•	•			•	•	•
.082	2.08	19.0	72.1	19.9	75.3	21.5	81.3	22.2	84.2	•	•	•	•	•	•	•
.090	2.29	22.9	86.8	24.0	90.7	25.9	97.9	26.8	101.4	•	•	•	•	•	•	•
.093	2.36	24.5	92.7	25.6	96.8	27.6	104.6	28.6	108.3	•	•			•	•	•
.098	2.49	27.2	102.9	28.4	107.5	30.7	116.1	31.8	120.2	•	•	•	•	•	•	•
.106	2.69	31.8	120.4	33.2	125.8	35.9	135.9	37.2	140.6	•	•	•	•	•	•	•
.110	2.79	34.3	129.7	35.8	135.5	38.7	146.3	40.0	151.4	•	•			•	•	•
.115	2.92	37.5	141.7	39.1	148.1	42.2	159.9	43.7	165.5	•	•	•	•	•	•	•
.125	3.18	44.2	167.5	46.2	174.9	49.9	188.9	51.7	195.6	•	•	•	•	•	•	•
.135	3.43	51.6	195.3	53.9	204.0	58.2	220.4	60.3	228.1	•	•	•	•	•	•	•
.145	3.68	59.5	225.4	62.2	235.4	67.2	254.2	69.5	263.2	•	•	•	•	•	•	•
.155	3.94	68.0	257.5	71.1	269.0	76.8	290.5	79.4	300.7	•	•	•	•	•	•	•
.165	4.19	77.1	291.8	80.5	304.8	87.0	329.2	90.0	340.8	•	•	•	•	•	•	•

*Orifice size (or equivalent for fan types) is denoted in the part number (-018, etc.)

OX SERIES CARBIDE ORIFICES

OX
(PAGE G-46)

ORIFICE SIZE*		FLOW AT SPECIFIED PRESSURES (PSI / BAR)															
in	mm	5,000	344	6,000	413	8,000	551	10,000	689	11,000	758	12,000	827	14,000	965	15,000	1034
		gpm	lpm	gpm	lpm	gpm	lpm	gpm	lpm	gpm	lpm	gpm	lpm	gpm	lpm	gpm	lpm
.018	0.46	0.6	2.4	0.7	2.7	0.8	3.1	0.9	3.4	1.0	3.6	1.0	3.8	1.1	4.1	0.9	3.4
.025	0.64	1.2	4.7	1.4	5.1	1.6	5.9	1.8	6.6	1.8	6.9	1.9	7.3	2.1	7.8	1.8	6.6
.029	0.74	1.7	6.3	1.8	6.9	2.1	8.0	2.4	8.9	2.5	9.3	2.6	9.8	2.8	10.5	2.4	8.9
.033	0.84	2.2	8.2	2.4	8.9	2.7	10.3	3.0	11.5	3.2	12.1	3.3	12.6	3.6	13.7	3.0	11.5
.038	0.97	2.9	10.8	3.1	11.9	3.6	13.7	4.0	15.3	4.2	16.1	4.4	16.8	4.8	18.1	4.0	15.3
.042	1.07	3.5	13.2	3.8	14.5	4.4	16.7	4.9	18.7	5.2	19.6	5.4	20.5	5.8	22.1	4.9	18.7
.046	1.17	4.2	15.9	4.6	17.4	5.3	20.1	5.9	22.4	6.2	23.5	6.5	24.6	7.0	26.5	5.9	22.4

*Orifice size (or equivalent for fan types) is denoted in the part number (-018, etc.)

NOZZLE NUMBER CROSS-REFERENCE CHART

Historically, Jetstream has used a random 5-digit part number with a 'Flow Number' to designate specific orifice sizes. Nozzle part numbers have since been updated to include the nozzle series and orifice size directly in the part number (i.e. JS2-018 for a JS2 series nozzle with a .018" diameter orifice). The charts below give a cross reference between the old 'Flow Number' and orifice diameter.

NO.	IN	MM
000	.018	0.46
00	.025	0.64
0	.029	0.74
1	.033	0.84
2	.038	0.97

NO.	IN	MM
3	.042	1.07
4	.046	1.17
5	.055	1.40
6	.063	1.60
7	.067	1.70

NO.	IN	MM
8	.070	1.78
9	.073	1.85
10	.078	1.98
12	.082	2.08
14	.090	2.28

NO.	IN	MM
15	.093	2.36
20	.110	2.79
30	.125	3.18

HHTC NOZZLES

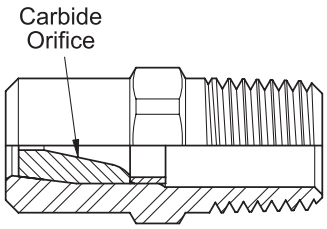

- Tungsten carbide orifice inserts significantly outlast conventional nozzle orifice material
- Tapered geometry provides highly cohesive, distortion-free waterjets for concentrated, work saving cleaning and cutting power
- Enables more work to be done in less time
- Straight (0°) and fan patterns available
- 1/4" NPT Male connection*
- 22,000 psi (1516 bar) maximum working pressure

HHTC0 STRAIGHT JET		HHTC15 15° FAN JET	HHTC25 25° FAN JET	HHTC50 50° FAN JET
PART NO.**		PART NO.**	PART NO.**	PART NO.**
HHTC0-018	HHTC0-073	HHTC15-029	HHTC25-047	HHTC50-057
HHTC0-020	HHTC0-075	HHTC15-038	HHTC25-057	HHTC50-063
HHTC0-022	HHTC0-078	HHTC15-042	HHTC25-063	HHTC50-067
HHTC0-024	HHTC0-082	HHTC15-047	HHTC25-067	HHTC50-069
HHTC0-026	HHTC0-090	HHTC15-057	HHTC25-069	HHTC50-073
HHTC0-029	HHTC0-093	HHTC15-063	HHTC25-073	HHTC50-078
HHTC0-032	HHTC0-098	HHTC15-067	HHTC25-078	
HHTC0-035	HHTC0-106	HHTC15-069	HHTC25-093	
HHTC0-038	HHTC0-110	HHTC15-073		
HHTC0-042	HHTC0-115	HHTC15-078		
HHTC0-047	HHTC0-125	HHTC15-082		
HHTC0-052	HHTC0-135	HHTC15-090		
HHTC0-057	HHTC0-145	HHTC15-093		
HHTC0-063	HHTC0-155			
HHTC0-067	HHTC0-165			
HHTC0-069				

*See details on all connection types in Section I.
**Orifice size (or equivalent for fan types) is denoted in the part number (-018, etc.)
For nozzle flow rates, see Orifice Group C chart, page G-44.

HHS0 NOZZLES

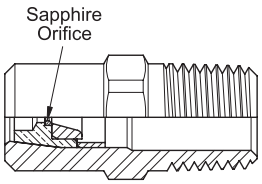

- Precision honed sapphire orifice inserts are twice as durable as tungsten carbide
- Tapered orifice retainer provides highly cohesive, distortion-free waterjets for concentrated, work saving cleaning and cutting power
- Straight (0°) patterns
- 1/4" NPT Male connection*
- 22,000 psi (1516 bar) maximum working pressure

HHS0 STRAIGHT JET

PART NO.**
HHS0-025
HHS0-029
HHS0-033
HHS0-038
HHS0-042
HHS0-046
HHS0-055

*See details on all connection types in Section I.
**Orifice size (or equivalent for fan types) is denoted in the part number (-018, etc.)
For nozzle flow rates, see Orifice Group A chart, page G-40.

HHD NOZZLES

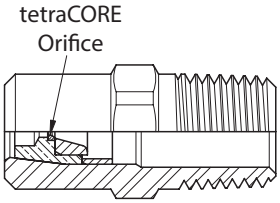

- tetraCORE™ synthetic diamond orifice inserts are 10-15x as durable as sapphire
- Tapered orifice retainer provides highly cohesive, distortion-free waterjets for concentrated, work saving cleaning and cutting power
- Straight (0°) patterns
- 1/4" NPT Male connection*
- 22,000 psi (1516 bar) maximum working pressure

HHD STRAIGHT JET

PART NO.**
HHD-038
HHD-042
HHD-047
HHD-052
HHD-057
HHD-063
HHD-069
HHD-073
HHD-078

*See details on all connection types in Section I.
**Orifice size (or equivalent for fan types) is denoted in the part number (-018, etc.)
For nozzle flow rates, see Orifice Group A chart, page G-40.

P1 PIPE CLEANING NOZZLES

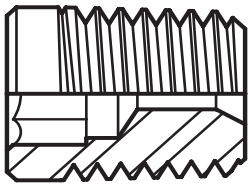

- Low profile design for unobstructed pipe cleaning
- Stainless steel
- Precision drilled orifice
- Tapered geometry provides highly cohesive, distortion-free waterjets for concentrated, work saving cleaning and cutting power
- Straight (0°) patterns
- 1/16″ NPT Male connection*
- 22,000 psi (1516 bar) maximum working pressure

P1 STRAIGHT JET

PART NO.**
P1-038
P1-042
P1-046
P1-055
P1-063
P1-067
P1-070
P1-073
P1-078

*See details on all connection types in Section I.
**Orifice size (or equivalent for fan types) is denoted in the part number (-018, etc.)
For nozzle flow rates, see Orifice Group B chart, page G-43.

OX NOZZLES

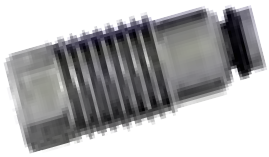

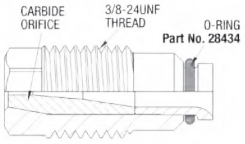

- High productivity carbide nozzles designed for use in the Orbi-Jet X22 tool
- Specially engineered carbide orifices provide the most aggressive waterjets available
- Efficient design reduces turbulence and orifice wear

OX STRAIGHT JET

PART NO.**
OX-018
OX-025
OX-029
OX-033
OX-038
OX-042
OX-046
OX-055

*See details on all connection types in Section I.
**Orifice size (or equivalent for fan types) is denoted in the part number (-018, etc.)
For nozzle flow rates, see the OX Series Carbide Orifices chart, page G-46.

UHPX NOZZLES

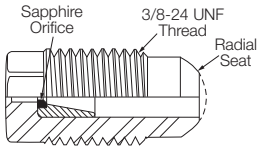

- Premium high productivity sapphire nozzles
- Tapered orifice retainer reduces turbulence and provides a cohesive, aggressive waterjet.
- 5/16" external hex
- 22,000 psi (1516 bar) maximum working pressure

UHPX STRAIGHT JET

PART NO.**	
UHPX-005	UHPX-025
UHPX-006	UHPX-026
UHPX-007	UHPX-027
UHPX-008	UHPX-028
UHPX-009	UHPX-029
UHPX-010	UHPX-030
UHPX-011	UHPX-031
UHPX-012	UHPX-032
UHPX-013	UHPX-033
UHPX-014	UHPX-034
UHPX-015	UHPX-035
UHPX-016	UHPX-036
UHPX-017	UHPX-037
UHPX-018	UHPX-038
UHPX-019	UHPX-039
UHPX-020	UHPX-040
UHPX-021	UHPX-042
UHPX-022	UHPX-046
UHPX-023	UHPX-052
UHPX-024	UHPX-067

*See details on all connection types in Section I.
**Orifice size (or equivalent for fan types) is denoted in the part number (-018, etc.)
For nozzle flow rates, see Orifice Group A chart, page G-40.

UHPXD NOZZLES

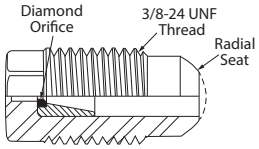

- Premium high productivity tetraCORE™ synthetic diamond nozzles
- Tapered orifice retainer reduces turbulence and provides a cohesive, aggressive waterjet.
- 5/16" external hex
- 22,000 psi (1516 bar) maximum working pressure

UHPXD STRAIGHT JET

PART NO.**	
UHPXD-005	UHPXD-025
UHPXD-006	UHPXD-026
UHPXD-007	UHPXD-027
UHPXD-008	UHPXD-028
UHPXD-009	UHPXD-029
UHPXD-010	UHPXD-030
UHPXD-011	UHPXD-031
UHPXD-012	UHPXD-032
UHPXD-013	UHPXD-033
UHPXD-014	UHPXD-034
UHPXD-015	UHPXD-035
UHPXD-016	UHPXD-036
UHPXD-017	UHPXD-037
UHPXD-018	UHPXD-038
UHPXD-019	UHPXD-039
UHPXD-020	UHPXD-040
UHPXD-021	UHPXD-042
UHPXD-022	UHPXD-046
UHPXD-023	UHPXD-052
UHPXD-024	UHPXD-067

*See details on all connection types in Section I.
**Orifice size (or equivalent for fan types) is denoted in the part number (-018, etc.)
For nozzle flow rates, see Orifice Group A chart, page G-40.

UHPXi NOZZLES

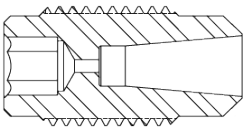

- Premium high productivity sapphire nozzles
- Tapered orifice retainer reduces turbulence and provides a cohesive, aggressive waterjet.
- 5/32" internal hex
- 22,000 psi (1516 bar) maximum working pressure

UHPXI STRAIGHT JET

PART NO.**	
UHPXi-005	UHPXi-025
UHPXi-006	UHPXi-026
UHPXi-007	UHPXi-027
UHPXi-008	UHPXi-028
UHPXi-009	UHPXi-029
UHPXi-010	UHPXi-030
UHPXi-011	UHPXi-031
UHPXi-012	UHPXi-032
UHPXi-013	UHPXi-033
UHPXi-014	UHPXi-034
UHPXi-015	UHPXi-035
UHPXi-016	UHPXi-036
UHPXi-017	UHPXi-037
UHPXi-018	UHPXi-038
UHPXi-019	UHPXi-039
UHPXi-020	UHPXi-040
UHPXi-021	UHPXi-042
UHPXi-022	UHPXi-046
UHPXi-023	UHPXi-052
UHPXi-024	UHPXi-067

*See details on all connection types in Section I.
**Orifice size (or equivalent for fan types) is denoted in the part number (-018, etc.)
For nozzle flow rates, see Orifice Group A chart, page G-40.

P4TC PIPE CLEANING NOZZLES

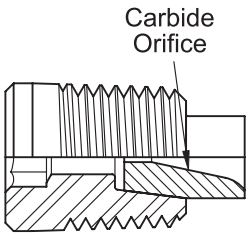

- Low profile design for unobstructed pipe cleaning
- Tungsten carbide orifice inserts significantly outlast conventional nozzle orifice material
- Tapered geometry provides highly cohesive, distortion-free waterjets for concentrated, work-saving cleaning and cutting power
- Straight (0°) patterns
- 1/4" NPT Male connection*
- 22,000 psi (1516 bar) maximum working pressure

P4TC STRAIGHT JET

PART NO.**	
P4TC-018	P4TC-073
P4TC-020	P4TC-075
P4TC-022	P4TC-078
P4TC-024	P4TC-082
P4TC-026	P4TC-090
P4TC-029	P4TC-093
P4TC-032	P4TC-098
P4TC-035	P4TC-106
P4TC-038	P4TC-110
P4TC-042	P4TC-115
P4TC-047	P4TC-125
P4TC-052	P4TC-135
P4TC-057	P4TC-145
P4TC-063	P4TC-155
P4TC-067	P4TC-165
P4TC-069	

*See details on all connection types in Section I.
**Orifice size (or equivalent for fan types) is denoted in the part number (-018, etc.)
For nozzle flow rates, see Orifice Group C chart, page G-44.

P2TC PIPE CLEANING NOZZLES

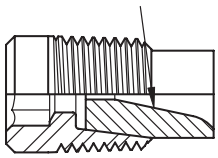

- Low profile design for unobstructed pipe cleaning
- Tungsten carbide orifice inserts significantly outlast conventional nozzle orifice material
- Tapered geometry provides highly cohesive, distortion-free waterjets for concentrated, work saving cleaning and cutting power
- Straight (0°) patterns
- 1/8" NPT Male connection*
- 22,000 psi (1516 bar) maximum working pressure

P2TC STRAIGHT JET

PART NO.**	
P2TC-018	P2TC-073
P2TC-020	P2TC-075
P2TC-022	P2TC-078
P2TC-024	P2TC-082
P2TC-026	P2TC-090
P2TC-029	P2TC-093
P2TC-032	P2TC-098
P2TC-035	P2TC-106
P2TC-038	P2TC-110
P2TC-042	P2TC-115
P2TC-047	P2TC-125
P2TC-052	P2TC-135
P2TC-057	P2TC-145
P2TC-063	P2TC-155
P2TC-067	P2TC-165
P2TC-069	

*See details on all connection types in Section I.
**Orifice size (or equivalent for fan types) is denoted in the part number (-018, etc.)
For nozzle flow rates, see Orifice Group C chart, page G-44.

P2TCS PIPE CLEANING NOZZLES

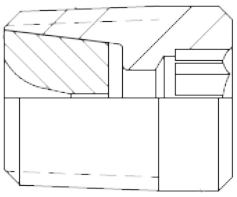

- Low profile design for unobstructed pipe cleaning with short inlet
- Tungsten carbide orifice inserts significantly outlast conventional nozzle orifice material
- Tapered geometry provides highly cohesive, distortion-free waterjets for concentrated, work saving cleaning and cutting power
- Straight (0°) patterns
- 1/8" NPT Male connection*
- 22,000 psi (1516 bar) maximum working pressure

P2TCS STRAIGHT JET

PART NO.**	
P2TCS-018	P2TCS-067
P2TCS-020	P2TCS-069
P2TCS-022	P2TCS-073
P2TCS-024	P2TCS-075
P2TCS-026	P2TCS-078
P2TCS-029	P2TCS-082
P2TCS-032	P2TCS-090
P2TCS-035	P2TCS-093
P2TCS-038	P2TCS-098
P2TCS-042	P2TCS-106
P2TCS-047	P2TCS-110
P2TCS-052	P2TCS-115
P2TCS-057	P2TCS-125
P2TCS-063	

*See details on all connection types in Section I.
**Orifice size (or equivalent for fan types) is denoted in the part number (-018, etc.)
For nozzle flow rates, see Orifice Group B chart, page G-43.

JS2 PIPE CLEANING NOZZLES

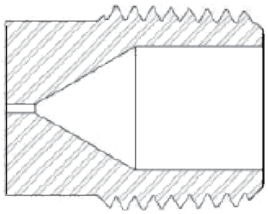

- Low profile design for unobstructed pipe cleaning with short inlet
- Stainless steel
- Precision drilled orifice
- Tapered geometry provides highly cohesive, distortion-free waterjets for concentrated, work saving cleaning and cutting power
- Straight (0°) patterns
- 1/8" NPT Male connection*
- 22,000 psi (1516 bar) maximum working pressure

JS2 STRAIGHT JET

PART NO.**	
JS2-018	JS2-063
JS2-020	JS2-069
JS2-022	JS2-075
JS2-024	JS2-082
JS2-026	JS2-090
JS2-029	JS2-098
JS2-032	JS2-106
JS2-035	JS2-115
JS2-038	JS2-125
JS2-042	JS2-135
JS2-047	JS2-145
JS2-052	JS2-PLUG
JS2-057	

*See details on all connection types in Section I.
**Orifice size (or equivalent for fan types) is denoted in the part number (-018, etc.)
For nozzle flow rates, see Orifice Group B chart, page G-43.

JS2D PIPE CLEANING NOZZLES

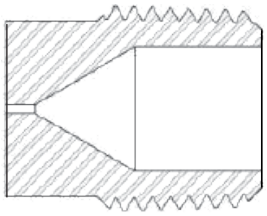

- Low profile design for unobstructed pipe cleaning with short inlet
- tetraCORE™ synthetic diamond orifice inserts are 10-15x as durable as sapphire
- Precision drilled orifice
- Tapered geometry provides highly cohesive, distortion-free waterjets for concentrated, work saving cleaning and cutting power
- Straight (0°) patterns
- 1/8" NPT Male connection*
- 22,000 psi (1516 bar) maximum working pressure

JS2D STRAIGHT JET

PART NO.**
JS2D-018
JS2D-020
JS2D-022
JS2D-024
JS2D-026
JS2D-029
JS2D-032
JS2D-035
JS2D-038
JS2D-042
JS2D-052
JS2D-057
JS2D-063
JS2D-078

*See details on all connection types in Section I.
**Orifice size (or equivalent for fan types) is denoted in the part number (-018, etc.)
For nozzle flow rates, see Orifice Group A chart, page G-40.

JS4 PIPE CLEANING NOZZLES

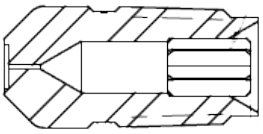

- Low profile design for unobstructed pipe cleaning with short inlet
- Stainless steel
- Precision drilled orifice
- Tapered geometry provides highly cohesive, distortion-free waterjets for concentrated, work saving cleaning and cutting power
- Straight (0°) patterns
- 1/4" NPT Male connection*
- 22,000 psi (1516 bar) maximum working pressure

JS4 STRAIGHT JET

PART NO.**	
JS4-018	JS4-063
JS4-020	JS4-069
JS4-022	JS4-075
JS4-024	JS4-082
JS4-026	JS4-090
JS4-029	JS4-098
JS4-032	JS4-106
JS4-035	JS4-115
JS4-038	JS4-125
JS4-042	JS4-135
JS4-047	JS4-145
JS4-052	JS4-155
JS4-057	JS4-165

*See details on all connection types in Section I.
**Orifice size (or equivalent for fan types) is denoted in the part number (-018, etc.)
For nozzle flow rates, see Orifices Group C chart, page G-44

JS4F PIPE CLEANING NOZZLES

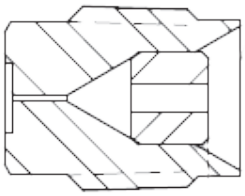

- Flush mount design
- Stainless steel
- Precision drilled orifice
- Tapered geometry provides highly cohesive, distortion-free waterjets for concentrated, work saving cleaning and cutting power
- Straight (0°) patterns
- 1/4" NPT Male connection*
- 22,000 psi (1516 bar) maximum working pressure

JS4F STRAIGHT JET

PART NO.**	
JS4F-018	JS4F-063
JS4F-020	JS4F-069
JS4F-022	JS4F-075
JS4F-024	JS4F-082
JS4F-026	JS4F-090
JS4F-029	JS4F-098
JS4F-032	JS4F-106
JS4F-035	JS4F-115
JS4F-038	JS4F-125
JS4F-042	JS4F-135
JS4F-047	JS4F-145
JS4F-052	JS4F-155
JS4F-057	JS4F-165
	JS4F-PLUG

*See details on all connection types in Section I.
**Orifice size (or equivalent for fan types) is denoted in the part number (-018, etc.)
For nozzle flow rates, see Orifice Group C chart, page G-44.

JS4FD PIPE CLEANING NOZZLES

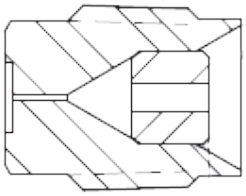

- Flush mount design
- tetraCORE™ synthetic diamond orifices are 10-15x as durable as sapphire
- Precision drilled orifice
- Tapered geometry provides highly cohesive, distortion-free waterjets for concentrated, work saving cleaning and cutting power
- Straight (0°) patterns
- 1/4" NPT Male connection*
- 22,000 psi (1516 bar) maximum working pressure

JS4FD STRAIGHT JET

PART NO.**
JS4FD-032
JS4FD-035
JS4FD-038
JS4FD-042
JS4FD-047
JS4FD-052
JS4FD-057
JS4FD-075

*See details on all connection types in Section I.
**Orifice size (or equivalent for fan types) is denoted in the part number (-018, etc.)
For nozzle flow rates, see Orifice Group A chart, page G-40

FLUSH MOUNT NOZZLE TIPS

P1SO PIPE CLEANING NOZZLES

- Low profile design for unobstructed pipe cleaning
- Precision honed sapphire orifice inserts are twice as durable as tungsten carbide
- Tapered geometry provides highly cohesive, distortion-free waterjets for concentrated, work saving cleaning and cutting power
- Enables more work to be done in less time
- Straight (0°) patterns
- 1/16″ NPT Male connection*
- 22,000 psi (1516 bar) maximum working pressure

P1SO STRAIGHT JET

PART NO.**
P1S0-018
P1S0-025
P1S0-029
P1S0-033
P1S0-038
P1S0-042
P1S0-046
P1S0-052

*See details on all connection types in Section I.
**Orifice size (or equivalent for fan types) is denoted in the part number (-018, etc.)
For nozzle flow rates, see Orifice Group A chart, page G-40.

RM PIPE CLEANING NOZZLES

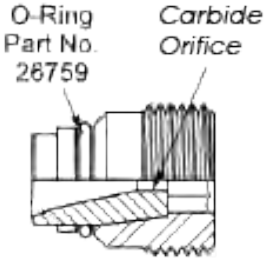

- Flush mount design
- Tapered geometry provides highly cohesive, distortion-free waterjets for concentrated, work saving cleaning and cutting power
- Enables more work to be done in less time
- Straight (0°) patterns
- 1/2″-28UNEF male connection
- 22,000 psi (1516 bar) maximum working pressure

RM STRAIGHT JET

PART NO.**	
RM-018	RM-073
RM-020	RM-075
RM-022	RM-078
RM-024	RM-082
RM-026	RM-090
RM-029	RM-093
RM-032	RM-098
RM-035	RM-106
RM-038	RM-110
RM-042	RM-115
RM-047	RM-125
RM-052	RM-135
RM-057	RM-145
RM-063	RM-155
RM-067	RM-165
RM-069	RM-PLUG

*See details on all connection types in Section I.
**Orifice size (or equivalent for fan types) is denoted in the part number (-018, etc.)
For nozzle flow rates, see Orifice Group C chart, page G-44.

RMD PIPE CLEANING NOZZLES

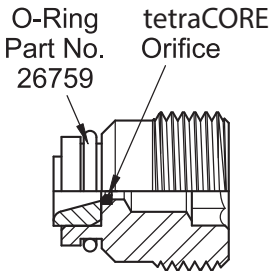

- Flush mount design
- tetraCORE™ synthetic diamond orifices are 10-15x as durable as sapphire
- Tapered geometry provides highly cohesive, distortion-free waterjets for concentrated, work saving cleaning and cutting power
- Enables more work to be done in less time
- Straight (0°) patterns
- 1/2"-28UNEF male connection
- 22,000 psi (1516 bar) maximum working pressure

RM STRAIGHT JET	
	PART NO.**
	RMD-018
	RMD-025
	RMD-029
	RMD-033
	RMD-038
	RMD-042
	RMD-046
	RMD-052

*See details on all connection types in Section I.
**Orifice size (or equivalent for fan types) is denoted in the part number (-018, etc.)
For nozzle flow rates, see Orifice Group A chart, page G-40.

RMS PIPE CLEANING NOZZLES

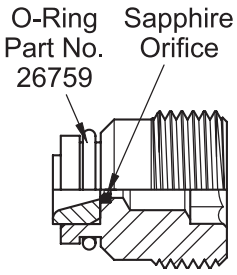

- Flush mount design
- Precision-honed sapphire orifice inserts are twice as durable as tungsten carbide
- Tapered orifice retainer provides highly cohesive, distortion-free waterjets for concentrated, work-saving cleaning and cutting power
- Straight (0°) patterns
- 1/2"-28UNEF male connection*
- 22,000 psi (1516 bar) maximum working pressure

RMS STRAIGHT JET	
	PART NO.**
	RMS-018
	RMS-025
	RMS-029
	RMS-033
	RMS-038
	RMS-042
	RMS-046
	RMS-052

*See details on all connection types in Section I.
**Orifice size (or equivalent for fan types) is denoted in the part number (-018, etc.)
For nozzle flow rates, see Orifice Group A chart, pageG-40.

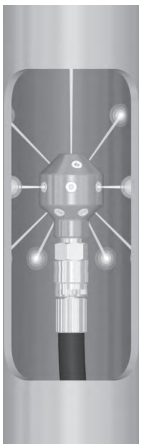

PIPE CLEANING NOZZLES

Commonly called “pineapples,” pipe cleaning nozzles are used for cleaning large diameter pipes (generally 4″ or larger).

- Available in a variety of sizes and patterns
- Nozzle ports can be plugged to create several unique patterns to perform specific tasks (unplugging, flushing, etc.)
- Heat-treated stainless steel

NOZZLE	NUMBER OF JETS	DIMENSIONS	USE WITH	NOZZLE PORT PLUG
	1 FRONT JET 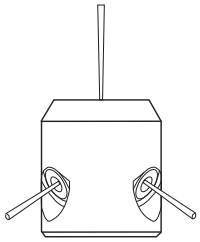 3 BACK JETS (30°)	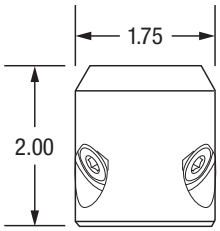 Dimensions shown in inches	P4TC Nozzles Page G-53 	Plug unused nozzle ports **Part No. 64682**

PART NO.	CONNECTIONS*		MAX OPERATING PRESSURE	
	INLET	NOZZLE	psi	bar
50512	1/2″ NPT Female	1/4″ NPT Female	10,000	689

*See details on all connection types in Section I.

NOZZLE	NUMBER OF JETS	DIMENSIONS	USE WITH	NOZZLE PORT PLUG
	1 FRONT JET 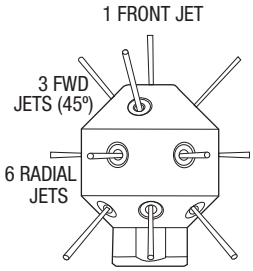 6 BACK JETS (45°)	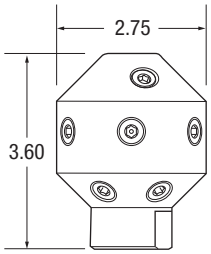 Dimensions shown in inches	P2TC/JS2 Nozzles Pages G-53, G-54 	Plug unused nozzle ports **Part No. 68528**

PART NO.	CONNECTIONS*		MAX OPERATING PRESSURE	
	INLET	NOZZLE	psi	bar
54184	3/4″ NPT Female	1/8″ NPT Female	15,000	1034

*See details on all connection types in Section I.

PIPE CLEANING NOZZLES

NOZZLE	NUMBER OF JETS	DIMENSIONS	USE WITH	NOZZLE PORT PLUG
	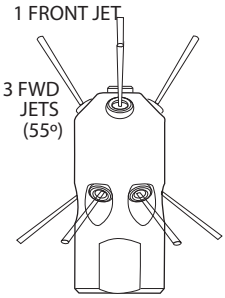	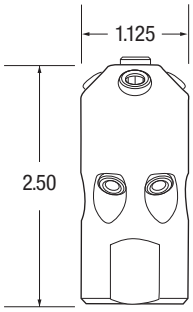 Dimensions shown in inches	P1S0 Nozzles Page G-57	Plug unused nozzle ports **Part No. 25395**

PART NO.	CONNECTIONS*		MAX OPERATING PRESSURE	
	INLET	NOZZLE	psi	bar
54165	1/2" NPT Female	1/16" NPT Female	15,000	1034

*See details on all connection types in Section I.

NOZZLE	NUMBER OF JETS	DIMENSIONS	USE WITH	NOZZLE PORT PLUG
	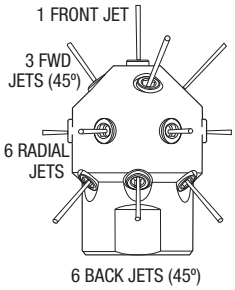	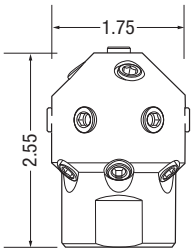 Dimensions shown in inches	P1S0 Nozzles Page G-57	Plug unused nozzle ports **Part No. 25395**

PART NO.	CONNECTIONS*		MAX OPERATING PRESSURE	
	INLET	NOZZLE	psi	bar
54166	3/4" NPT Female	1/16" NPT Female	15,000	1034

*See details on all connection types in Section I.

PIPE CLEANING NOZZLES

NOZZLE	NUMBER OF JETS	DIMENSIONS	USE WITH	NOZZLE PORT PLUG
	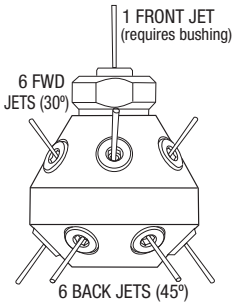	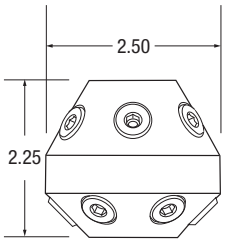 Dimensions shown in inches	P4TC Nozzles Page G-53 	Plug unused nozzle ports **Part No. 64682**

PART NO.	CONNECTIONS*		MAX OPERATING PRESSURE	
	INLET	NOZZLE	psi	bar
51094	3/4" NPT Female	1/4" NPT Female	15,000	1034

*See details on all connection types in Section I.

CONFIGURATIONS & ACCESSORIES

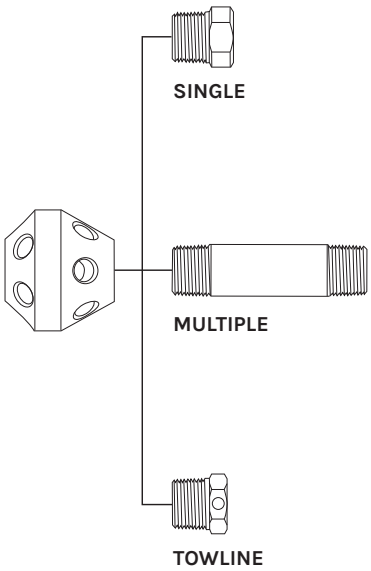

Reducing Bushing
Allows the connection of a nozzle to the front port
Part No. 26069

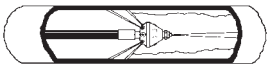

Nipple
Connect multiple pipe cleaning nozzles
Part No. 28875-04

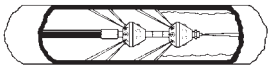

Towing Eye Plug
Use to pull nozzle through pipe
Part No. 51156

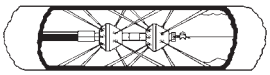

TOOLS & NOZZLES

PIPE CLEANING NOZZLES

NOZZLE	NUMBER OF JETS	DIMENSIONS	USE WITH	NOZZLE PORT PLUG
	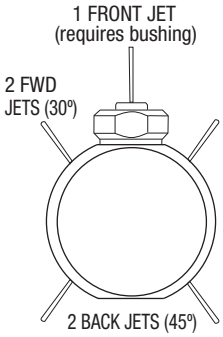	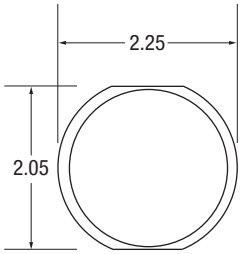	P4TC Nozzles Page G-53 	Plug unused nozzle ports **Part No. 64682**

PART NO.	CONNECTIONS*			MAX OPERATING PRESSURE	
	INLET	FRONT	NOZZLE PORT	psi	bar
51096	1/2" NPT Female	1/4" NPT Female	1/4" NPT Female	10,000	689

*See details on all connection types in Section I.

CONFIGURATIONS & ACCESSORIES

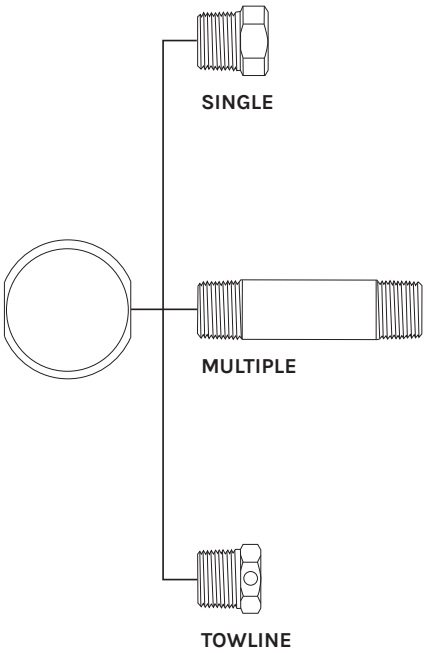

Reducing Bushing
Allows the connection of a nozzle to the front port
Part No. 25904

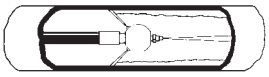

Nipple
Connect multiple pipe cleaning nozzles
Part No. 55450-04

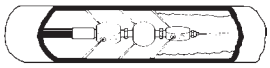

Towing Eye Plug
Use to pull nozzle through pipe
Part No. 51169

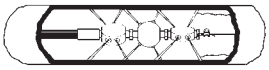

DRILLJET™

TUBE CLEANING NOZZLES

The DrillJet™ is a self-powered rotating nozzle used for removing deposits in tubes. The main rotor (with four orifices - two front facing and two radial), the only rotating component in the DrillJet, spins at ultra-high rpms. The nozzle can be used with either rigid or flexible lances.

- Designed for unplugging and cleaning tubes found in heat exchangers and industrial tube bundles
- Water bearing design - no bearings, seals, or lubricants to replace!
- 9.5 mm, 13 mm, 18 mm, 24 mm, and 33 mm sizes available
- Different inlet and orifice configurations are available for working pressures up to 15,000 psi (1034 bar)
- **The tool is not designed to be repairable in the field**

NOZZLE PART NUMBERING

Example Part Number DJ13-P2-322-15-10

SIZE (mm)
INLET CONFIGURATION
NOZZLE COUNT (forward/side/rear)
PRESSURE (Kpsi)
FLOW (gpm)

UNIVERSAL 7-JET PATTERN
9.5 and 13 mm

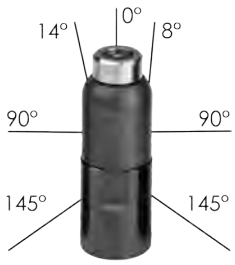

UNIVERSAL 7-JET PATTERN
18 and 24 mm

UNIVERSAL 7-JET PATTERN
33 mm

UNIVERSAL 6-JET PATTERN
9.5 and 13 mm

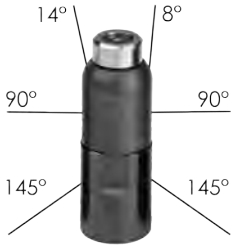

UNIVERSAL 6-JET PATTERN
18 and 24 mm

UNIVERSAL 6-JET PATTERN
33 mm

DRILLJET™ TUBE CLEANING NOZZLES

ASSEMBLY PART NO.	TUBE ID RANGE		INLET CONNECTIONS*	OUTSIDE DIAMETER		LENGTH		FLOW AT MAX OPERATING PRESSURE		MAX OPERATING PRESSURE		PULL
	in	mm		in	mm	in	mm	gpm	lpm	psi	bar	lbs
UNIVERSAL 7-JET												
DJ9.5-P1-322-15-8	.47-.63	12-16	1/16" NPT	0.37	9.5	1.54	39	8	30			3.5
DJ13-P2-322-15-10	.60-1.0	15-25	1/8" NPT	0.50	13	1.65	42	10	38			7
DJ13-BSPP2-322-15-10			1/8" BSPP									
DJ18-P4-322-15-10	.87-1.3	22-33	1/4" NPT	0.71	18	2.16	55	10	38			4
DJ18-P4-322-15-14								14	53			5
DJ24-P6-322-15-10	1.1-2.0	28-51	3/8" NPT	0.94	24	2.54	65	10	38			6
DJ24-P6-322-15-15								15	57	15,000	1034	7
DJ24-P6-322-15-24								24	91			6
DJ33-P8-322-15-17	1.5-2.4	38-61	1/2" NPT	1.30	33	3.30	84	17	64			6
DJ33-P8-322-15-24								24	91			9
DJ33-P8-322-15-32								32	121			11
DJ33-P8-322-15-37								37	140			13
DJ33-P8-322-15-47								47	178			9
UNIVERSAL 6-JET												
DJ9.5-P1-222-15-8	.47-.63	12-16	1/16" NPT	0.37	9.5	1.54	39	8	30			8.5
DJ13-P2-222-15-10	.60-1.0	15-25	1/8" NPT	0.50	13	1.65	42	10	38			11.5
DJ13-BSPP2-222-15-10			1/8" BSPP									
DJ18-P4-222-15-10	.87-1.3	22-33	1/4" NPT	0.71	18	2.16	55	10	38			9
DJ18-P4-222-15-14								14	53			14
DJ24-P6-222-15-10	1.1-2.0	28-51	3/8" NPT	0.94	24	2.54	65	10	38			13
DJ24-P6-222-15-15								15	57	15,000	1034	19
DJ24-P6-222-15-24								24	91			22
DJ33-P8-222-15-17	1.5-2.4	38-61	1/2" NPT	1.30	33	3.30	84	17	64			16
DJ33-P8-222-15-24								24	91			22
DJ33-P8-222-15-32								32	121			27
DJ33-P8-222-15-37								37	140			33
DJ33-P8-222-15-47								47	178			30

*See details on all connection types in Section I.

These resources contain additional technical information about the DrillJet™ tube cleaning nozzles.

Click or scan the QR code.

Quick Start Guide
QSG-180

Product Instruction
PI-180

NOTE: Shown with FP series cap nozzles, SOLD SEPARATELY.

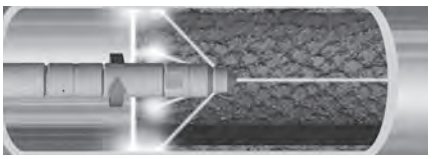

TUBE SPINNER™

TUBE CLEANING NOZZLES

- Provide the most thorough cleaning of tube walls
- Maximum impact without streaking
- Self-rotating, heat-treated stainless steel sleeve spins on a bearing of water and features two radial jets that spin at high speed for complete coverage
- Specially coated nozzle body for maximum lubricity
- Custom flow rates available for special applications
- Tube nozzles or blanks are used to cap the end of the nozzle **(sold separately)**
- Thruster nozzles can be used in conjunction for greater inertia forward **(sold separately)**
- Female pipe thread (NPT Female) inlet, male pipe thread outlet (NPT Male)
- 15,000 psi (1034 bar) maximum working pressure

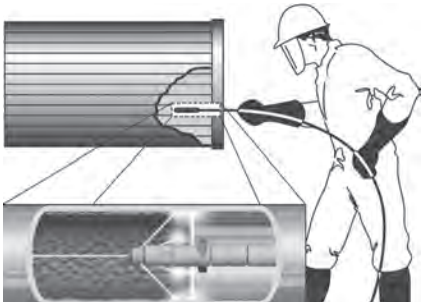

REPLACEMENT PART FOR FLAT SEAL CONNECTIONS

Copper Crush Washer

For flat seal connections between the tube spinner and the lance.

SIZE	PART NO.
M7	59932
1/8" BSPP	59933
1/4" BSPP	59934

ASSEMBLY PART NO.	CONNECTIONS* FEMALE INLET X MALE OUTLET*	FLOW RATE	OUTSIDE DIAMETER		LENGTH W/ NOZZLE		SLEEVE PART NO.	BODY PART NO.
			in	mm	in	mm		
52146	1/16" NPT	1	.375	9.5	2.72	69	52141	52143
52147		2	.375	9.5	2.72	69	52142	52143
51997	1/8" NPT	1	.500	12.7	2.66	68	51992	51996
51998		2	.500	12.7	2.66	68	51993	51996
52002	1/4" NPT	1	.665	16.8	3.14	80	51922	52001
52003		2	.665	16.8	3.14	80	51923	52001
52007	3/8" NPT	1	.875	22.2	3.30	84	51926	52006
52008		2	.875	22.2	3.30	84	51927	52006
64104		3	.875	22.2	3.30	84	64088	52006
64105		4	.875	22.2	3.30	84	64089	52006
52012	1/2" NPT	1	1.040	26.4	3.92	100	51941	52011
52013		2	1.040	26.4	3.92	100	51942	52011
64106		3	1.040	26.4	3.92	100	64090	52011
64107		4	1.040	26.4	3.92	100	64091	52011
59900	M7 Flat Seal	1	.375	9.5	2.28	58	52141	59906
59901		2	.375	9.5	2.28	58	52142	59906
59902	1/8" BSPP Flat Seal	1	.500	12.7	2.38	61	51992	59907
59903		2	.500	12.7	2.38	61	51993	59907
59904	1/4" BSPP Flat Seal	1	.665	16.9	2.68	68	51922	59908
59905		2	.665	16.9	2.68	68	51923	59908

*See details on all connection types in Section I.

TUBE SPINNER™ NOZZLE FLOW RATINGS

SIZE*	FLOW RATE	FLOW AT SPECIFIED PRESSURES (PSI / BAR)**																			
		3,000	206	4,000	275	5,000	344	6,000	413	7,000	482	8,000	551	9,000	620	10,000	689	12,500	861	15,000	1034
		gpm	lpm	gpm	lpm	gpm	lpm	gpm	lpm	gpm	lpm	gpm	lpm	gpm	lpm	gpm	lpm	gpm	lpm	gpm	lpm
NPT INLET																					
1/16"	1	1.9	7.1	2.3	8.7	2.6	9.8	2.9	10.9	3.2	12.1	3.5	13.2	3.7	14.0	4.0	15.1	4.6	17.4	5.1	19.3
	2	3.0	11.3	3.5	13.2	4.0	15.1	4.4	16.6	4.8	18.1	5.2	19.6	5.6	21.2	5.9	22.3	6.8	25.7	7.5	28.3
1/8"	1	2.6	9.8	3.1	11.7	3.5	13.2	3.9	14.7	4.3	16.6	4.7	17.7	5.0	18.9	5.4	20.4	6.2	23.4	7.0	26.5
	2	5.0	18.9	5.9	22.3	6.7	25.3	7.4	28.0	8.0	30.2	8.7	32.9	9.3	35.2	9.9	37.4	11.3	42.7	12.5	47.3
1/4"	1	2.4	9.0	2.9	10.9	3.4	12.8	3.8	14.3	4.2	15.9	4.6	17.4	5.0	18.9	5.4	20.4	6.3	23.8	7.2	27.2
	2	5.2	19.6	6.2	23.4	7.0	26.5	7.8	29.5	8.5	32.1	9.2	34.8	9.9	37.4	10.6	40.1	12.1	45.8	13.5	51.1
3/8"	1	3.6	13.6	4.3	16.6	4.9	18.5	5.5	20.8	6.1	23.0	6.6	24.9	7.2	27.2	7.7	29.1	9.0	34.0	10.1	38.2
	2	7.0	26.5	8.2	31.0	9.3	35.2	10.4	39.3	11.3	42.7	12.2	46.1	13.1	49.5	14.0	53.0	15.9	60.1	17.8	67.3
	3	10.0	37.8	11.7	44.2	13.3	50.3	14.7	55.6	16.0	60.5	17.2	65.1	18.4	69.6	19.6	74.1	22.1	83.6	24.6	93.1
	4	13.7	51.8	15.9	60.1	18.0	68.1	19.9	75.3	21.5	81.3	23.1	87.4	24.7	93.5	26.2	99.1	29.5	111.7	32.7	123.8
1/2"	1	3.0	11.3	3.7	14.0	4.3	16.2	4.9	18.5	5.5	20.8	6.1	23.0	6.6	24.9	7.1	26.8	8.5	32.1	9.7	36.7
	2	6.7	25.3	7.9	29.9	9.0	34.0	10.0	37.8	11.0	41.6	12.0	45.4	12.9	48.8	13.7	51.8	15.8	59.8	17.8	67.3
	3	10.3	38.9	12.2	46.1	13.8	52.2	15.2	57.5	16.7	63.2	18.1	68.5	19.3	73.0	20.5	77.6	23.4	88.5	26.1	98.9
	4	14.0	53.0	16.4	62.0	18.5	70.0	20.4	77.2	22.2	84.0	24.0	90.8	25.6	96.9	27.1	102.6	30.8	116.6	34.2	129.5
M7 FLAT SEAL INLET																					
M7	1	1.9	7.1	2.3	8.7	2.6	9.8	2.9	10.9	3.2	12.1	3.5	13.2	3.7	14.0	4.0	15.1	4.6	17.4	5.1	19.3
	2	3.0	11.3	3.5	13.2	4.0	15.1	4.4	16.6	4.8	18.1	5.2	19.6	5.6	21.2	5.9	22.3	6.8	25.7	7.5	28.3
BSPP FLAT SEAL INLET																					
1/8"	1	2.6	9.8	3.1	11.7	3.5	13.2	3.9	14.7	4.3	16.6	4.7	17.7	5.0	18.9	5.4	20.4	6.2	23.4	7.0	26.5
	2	5.0	18.9	5.9	22.3	6.7	25.3	7.4	28.0	8.0	30.2	8.7	32.9	9.3	35.2	9.9	37.4	11.3	42.7	12.5	47.3
1/4"	1	2.4	9.0	2.9	10.9	3.4	12.8	3.8	14.3	4.2	15.9	4.6	17.4	5.0	18.9	5.4	20.4	6.3	23.8	7.2	27.2
	2	5.2	19.6	6.2	23.4	7.0	26.5	7.8	29.5	8.5	32.1	9.2	34.8	9.9	37.4	10.6	40.1	12.1	45.8	13.5	51.1

*See details on all connection types in Section I.
**Flow rates do not include additional flow if a drilled cap nozzle is used.

These resources contain additional technical information about the Tube Spinner™ tube cleaning nozzles.

Click or scan the QR code.

Quick Start Guide
QSG-123

Product Instruction
PI-123

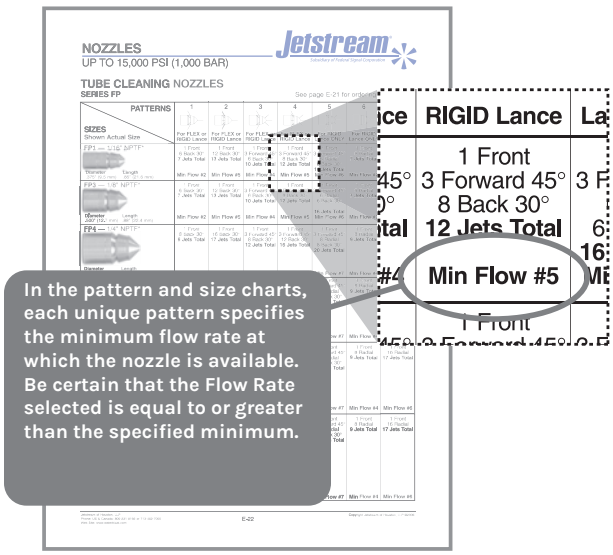

TUBE CLEANING NOZZLES

SELECTION & PART NUMBERING

Use the part numbering instructions and flow chart on this page for ordering tube nozzles pages G-68 to G-88.

NOZZLE PART NUMBERING

Example Part Number FP 3 4 - 7

NOZZLE SERIES

FP FPC FPT E EX
C MP MS TP
FM FB2

SIZE
From left column of nozzle size and pattern charts

(Pages G-75 - G-88.)

PATTERN
Specify number corresponding to desired pattern nozzle size and pattern charts.

(Pages G-75 - G-88.)

HYPHEN

FLOW RATING
Find the flow rate number that most closely matches the desired flow and pressure chart below.
Example:
A flow rate number of 7 will flow 6.6 gpm at 6,000 psi.

NOZZLE FLOW RATES

FLOW RATE	FLOW AT SPECIFIED PRESSURES (PSI / BAR)																	
	3,000	206	5,000	344	6,000	413	8,000	551	10,000	689	11,000	758	12,000	827	14,000	965	15,000	1034
	gpm	lpm	gpm	lpm	gpm	lpm	gpm	lpm	gpm	lpm	gpm	lpm	gpm	lpm	gpm	lpm	gpm	lpm
2	1.5	5.6	1.9	7.1	2.1	7.9	2.4	9.1	2.7	10.2	2.9	10.9	3.0	11.3	3.2	12.3	3.3	12.4
3	1.8	7.1	2.4	9.1	2.6	9.8	3.0	11.3	3.3	12.4	3.5	13.2	3.7	14.0	4.0	15.2	4.1	15.5
4	2.2	8.3	2.9	10.9	3.2	12.3	3.7	14.0	4.1	15.5	4.3	16.3	4.5	17.0	4.8	18.1	5.0	18.9
5	3.1	12.1	4.0	15.2	4.4	16.6	5.1	19.3	5.7	21.5	6.0	22.7	6.3	23.8	6.8	25.7	7.0	26.5
6	4.1	15.5	5.2	19.6	5.7	21.5	6.6	24.9	7.4	28.0	7.8	29.5	8.1	30.6	8.7	32.9	9.1	34.5
7	4.7	17.7	6.0	22.7	6.6	24.9	7.6	28.9	8.5	32.1	8.9	33.6	9.3	35.2	10.1	38.2	10.4	39.3
8	5.1	19.3	6.6	24.9	7.2	27.4	8.3	31.4	9.3	35.2	9.7	36.8	10.2	38.6	11.0	41.6	11.4	43.1
9	5.5	208	7.1	26.8	7.8	29.5	9.0	34.0	10.1	38.2	10.6	40.3	11.1	42.0	11.9	45.0	12.4	47.0
10	6.3	23.8	8.1	30.6	8.9	33.6	10.3	38.9	11.5	43.6	12.1	45.8	12.6	47.7	13.6	51.4	14.1	53.3
12	6.8	25.7	8.8	33.3	9.6	36.3	11.1	42.0	12.4	47.0	13.0	49.2	13.6	51.4	14.7	55.6	15.2	57.5
14	8.2	31.0	10.6	40.3	11.6	43.9	13.4	50.7	15.0	56.7	15.7	59.4	16.4	62.0	17.7	67.0	18.4	69.6
15	9.0	34.0	11.6	43.9	12.7	48.0	14.6	55.2	16.4	62.0	17.2	65.1	17.9	67.7	19.4	73.4	20.1	76.0
20	12.5	47.3	16.2	61.3	17.7	67.0	20.5	77.6	22.9	86.6	24.0	90.8	25.1	95.0	27.1	102.6	28.1	106.4
40	16.2	61.3	20.9	79.1	22.9	86.6	26.5	100.3	29.8	112.8	31.0	117.3	32.4	122.6	35.0	132.5	36.2	137.0

FP SERIES
TUBE CLEANING NOZZLES

- For use with flex or rigid lances that have male pipe threads (NPT Male)
- Recessed orifices for protection surface abrasion or damage by wrenches
- Double-tapered nose for fast, unrestricted travel through plugged tubes
- Machined heat-treated stainless steel
- Maximum working pressure: 15,000 psi (1034 bar)
- Six sizes, seven standard patterns, and fourteen flow ratings (see page G-77)
- Custom patterns available
- Standard patterns with minimum flows

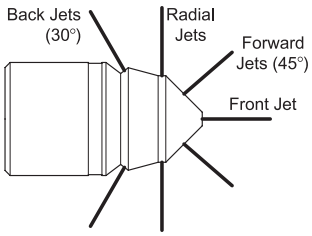

FPC SERIES
TUBE CLEANING NOZZLES

- For use with flex or rigid lances that have male pipe threads (NPT Male)
- Ultra-compact design ideal for getting around sharp bends in tube
- Orifices recessed for protection surface abrasion or damage by wrenches
- Machined heat-treated stainless steel
- Maximum working pressure: 15,000 psi (1034 bar)
- Five sizes, seven standard patterns and fourteen flow ratings
- Custom patterns available
- See page G-67 for flow ratings and ordering instructions

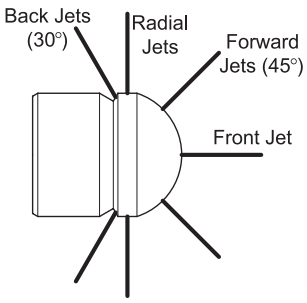

C SERIES
TUBE CLEANING NOZZLES

- For use with specially designed Jetstream flex lances that have male machine screw threads (UNEF)
- Ultra-compact design for cleaning U-tubes and other small diameter tubes
- Wrench flats for easy installation and removal
- Machined heat-treated stainless steel
- Locking pin (see page G-79) must be installed to prevent nozzle unscrewing lance
- Maximum working pressure: C1: 8,000 psi (551 bar) C2: 10,000 psi (689 bar)
- Two sizes, four standard patterns and fourteen flow ratings
- See page G-67 for flow ratings and ordering instructions
- Custom patterns available

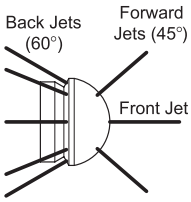

FPT SERIES
TUBE CLEANING NOZZLES

- For use with flex or rigid lances that have male pipe threads (NPT Male)
- Features three rows of rearward facing jets for powerful polishing and flushing
- Wrench flats for easy installation and removal
- Machined heat-treated stainless steel
- Maximum working pressure: 15,000 psi (1034 bar)
- Five sizes, four standard patterns and fourteen flow ratings (ten for standard patterns)
- See page G-67 for flow ratings and ordering instructions
- Custom patterns available

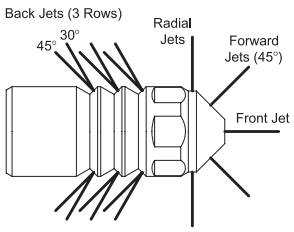

E SERIES
TUBE CLEANING NOZZLES

- For use with flex or rigid lances that have male pipe threads (NPT Male)
- Features long, tapered nose for penetrating fouled tubes
- Machined heat-treated stainless steel
- Maximum working pressure: 15,000 psi (1034 bar)
- Five sizes, two standard patterns and fourteen flow ratings (eleven for standard patterns)
- See page G-67 for flow ratings and ordering instructions
- Custom patterns available

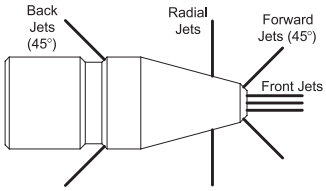

EX SERIES
TUBE CLEANING NOZZLES

- For use with flex or rigid lances that have male pipe threads (NPT Male)
- Features long, tapered nose for penetrating front jets and two rows of recessed rear jets for flushing, polishing and pulling
- Wrench flats for easy installation and removal
- Machined heat-treated stainless steel
- Maximum working pressure: 15,000 psi (1034 bar)
- Five sizes, five standard patterns and fourteen flow ratings (11 for standard patterns)
- See page G-67 for flow ratings and ordering instructions
- Custom patterns available

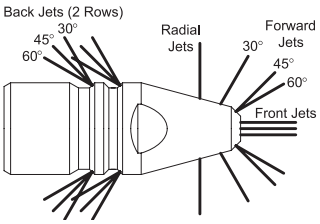

US & Canada: 800-231-8192 or 832-590-1300 | **waterblast.com**

Jetstream® Subsidiary of Federal Signal Corporation

MP SERIES
TUBE CLEANING NOZZLES

- Specifically for use with rigid lances that have female pipe threads (NPT Female)
- Recessed orifices for protection from surface abrasion or damage by wrenches
- Double-tapered nose for fast, unrestricted travel through plugged tubes
- Machined heat-treated stainless steel
- Maximum working pressure: 15,000 psi (1034 bar)
- Four sizes, seven standard patterns and fourteen flow ratings
- Custom patterns available
- See page G-67 for flow ratings and ordering instructions

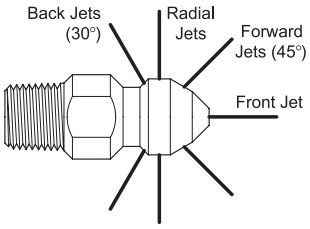

MS SERIES
TUBE CLEANING NOZZLES

- For use with Jetstream flex or rigid lances that have female machine screw threads (UNF, UNC)
- Designed with the smallest possible outside diameter for cleaning small tubes
- Wrench flats for easy installation and removal
- Machined heat-treated stainless steel
- Maximum working pressure: 10,000 psi (689 bar)
- Four sizes, seven standard patterns and fourteen flow ratings
- See page G-67 for flow ratings and ordering instructions
- Custom patterns available

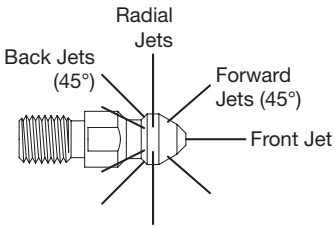

TP SERIES THRUSTERS

TUBE CLEANING NOZZLES

- Used in combination with Tube Spinners or other nozzles that do not have rear jets to provide thrust for pulling through tubes
- Rear orifices recessed for protection surface abrasion or damage by wrenches
- Female pipe threads at inlet (NPT Female) and male pipe threads at outlet (NPT Male)
- Machined heat-treated stainless steel
- Maximum working pressure: 15,000 psi (1034 bar)
- Three sizes, two standard patterns and thirteen flow ratings
- See page G-67 for flow ratings and ordering instructions
- Custom patterns available

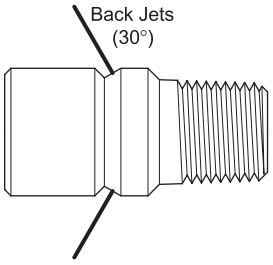

FM7 SERIES
TUBE CLEANING NOZZLES

- For use with Jetstream flex lances that have male M7 Flat Seal end fittings
- Heat-treated stainless steel
- Copper Crush Washer (shown on page G-65) must be installed for seal connection between the nozzle and lance
- Maximum working pressure: 15,000 psi (1034 bar)
- Seven standard patterns and fourteen flow ratings
- See page G-67 for flow ratings and ordering instructions
- Custom patterns available

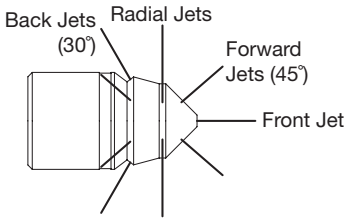

FB SERIES
TUBE CLEANING NOZZLES

- For use with Jetstream flex lances that have male BSPP Flat Seal end fittings
- Heat-treated stainless steel
- Copper Crush Washer (shown on page G-65) must be installed for seal connection between the nozzle and lance
- Maximum working pressure: 15,000 psi (1034 bar)
- Seven standard patterns and 14 flow ratings
- See page G-67 for flow ratings and ordering instructions
- Custom patterns available

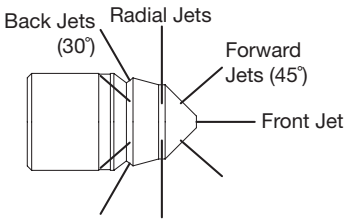

FM / FB SERIES TUBE CLEANING NOZZLES

PART NO.	FM7	FB2	FB4
NOZZLES SHOWN AS ACTUAL SIZE			
INLET CONNECTION*	M7 FLAT SEAL	1/8" BSPP FLAT SEAL	1/4" BSPP FLAT SEAL
OUTSIDE DIAMETER	.375 | 9.5 mm	.500 | 12.7 mm	.665 | 16.9 mm
OVERALL LENGTH	.85" | 21.6 mm	.88" | 22.4 mm	1.16" | 29.5 mm
PATTERNS - NUMBER OF JETS BY LOCATION			
PATTERN 1 FLEX OR RIGID LANCES 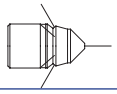	1 Front 6 Back 30° 7 Jets Total **Min Flow #2**	1 Front 6 Back 30° 7 Jets Total **Min Flow #2**	1 Front 8 Back 30° 9 Jets Total **Min Flow #4**
PATTERN 2 FLEX OR RIGID LANCES 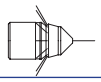	1 Front 12 Back 30° 13 Jets Total **Min Flow #5**	1 Front 12 Back 30° 13 Jets Total **Min Flow #5**	1 Front 16 Back 30° 17 Jets Total **Min Flow #6**
PATTERN 3 FLEX OR RIGID LANCES 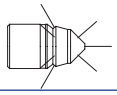	1 Front 3 Forward 45° 6 Back 30° 10 Jets Total **Min Flow #4**	1 Front 3 Forward 45° 6 Back 30° 10 Jets Total **Min Flow #4**	1 Front 3 Forward 45° 8 Back 30° 12 Jets Total **Min Flow #5**
PATTERN 4 FLEX OR RIGID LANCES 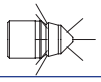	1 Front 3 Forward 45° 8 Back 30° 12 Jets Total **Min Flow #5**	1 Front 3 Forward 45° 8 Back 30° 12 Jets Total **Min Flow #5**	1 Front 3 Forward 45° 12 Back 30° 16 Jets Total **Min Flow #6**
PATTERN 5 FLEX OR RIGID LANCES 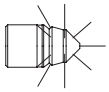	1 Front 3 Forward 45° 6 Radial 6 Back 30° 16 Jets Total **Min Flow #6**	1 Front 3 Forward 45° 6 Radial 6 Back 30° 16 Jets Total **Min Flow #6**	1 Front 3 Forward 45° 8 Radial 8 Back 30° 20 Jets Total **Min Flow #7**
PATTERN 6 RIGID LANCE ONLY 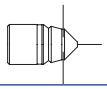	1 Front 6 Radial 7 Jets Total **Min Flow #2**	1 Front 6 Radial 7 Jets Total **Min Flow #2**	1 Front 8 Radial 9 Jets Total **Min Flow #4**
PATTERN 7 RIGID LANCE ONLY 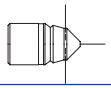	1 Front 12 Radial 13 Jets Total **Min Flow #5**	1 Front 12 Radial 13 Jets Total **Min Flow #5**	1 Front 16 Radial 17 Jets Total **Min Flow #6**

*See details on all connection types in Section I.

TOOLS & NOZZLES

FP SERIES TUBE CLEANING NOZZLES

PART NO.	FP1	FP3	FP4
NOZZLES SHOWN AS ACTUAL SIZE			
BLANK PART NO.	50624	50554	50639
INLET CONNECTION*	1/16" NPT FEMALE*	1/8" NPT FEMALE*	1/4" NPT FEMALE*
OUTSIDE DIAMETER	.375 | 9.5 mm	.500 | 12.7 mm	.665 | 16.9 mm
OVERALL LENGTH	.85" | 21.6 mm	.88" | 22.4 mm	1.16" | 29.5 mm
PATTERNS - NUMBER OF JETS BY LOCATION			
PATTERN 1 **FLEX OR RIGID LANCES** 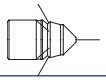	1 Front 6 Back 30° 7 Jets Total **Min Flow #2**	1 Front 6 Back 30° 7 Jets Total **Min Flow #2**	1 Front 8 Back 30° 9 Jets Total **Min Flow #4**
PATTERN 2 **FLEX OR RIGID LANCES** 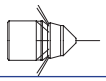	1 Front 12 Back 30° 13 Jets Total **Min Flow #5**	1 Front 12 Back 30° 13 Jets Total **Min Flow #5**	1 Front 16 Back 30° 17 Jets Total **Min Flow #6**
PATTERN 3 **FLEX OR RIGID LANCES** 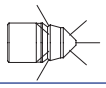	1 Front 3 Forward 45° 6 Back 30° 10 Jets Total **Min Flow #4**	1 Front 3 Forward 45° 6 Back 30° 10 Jets Total **Min Flow #4**	1 Front 3 Forward 45° 8 Back 30° 12 Jets Total **Min Flow #5**
PATTERN 4 **FLEX OR RIGID LANCES** 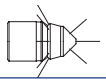	1 Front 3 Forward 45° 8 Back 30° 12 Jets Total **Min Flow #5**	1 Front 3 Forward 45° 8 Back 30° 12 Jets Total **Min Flow #5**	1 Front 3 Forward 45° 12 Back 30° 16 Jets Total **Min Flow #6**
PATTERN 5 **FLEX OR RIGID LANCES** 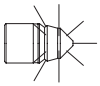	1 Front 3 Forward 45° 6 Radial 6 Back 30° 16 Jets Total **Min Flow #6**	1 Front 3 Forward 45° 6 Radial 6 Back 30° 16 Jets Total **Min Flow #6**	1 Front 3 Forward 45° 8 Radial 8 Back 30° 20 Jets Total **Min Flow #7**
PATTERN 6 **RIGID LANCE ONLY** 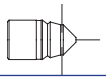	1 Front 6 Radial 7 Jets Total **Min Flow #2**	1 Front 6 Radial 7 Jets Total **Min Flow #2**	1 Front 8 Radial 9 Jets Total **Min Flow #4**
PATTERN 7 **RIGID LANCE ONLY** 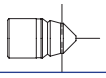	1 Front 12 Radial 13 Jets Total **Min Flow #5**	1 Front 12 Radial 13 Jets Total **Min Flow #5**	1 Front 16 Radial 17 Jets Total **Min Flow #6**

*See details on all connection types in Section I.

FP SERIES TUBE CLEANING NOZZLES

FP5	FP6	FP7
50640	50620	50851
3/8" NPT FEMALE*	1/2" NPT FEMALE*	3/4" NPT FEMALE*
.875" | 22.2 mm	1.040 | 26.4 mm	1.375 | 34.9 mm
1.20" | 30.5 mm	1.47" | 37.3 mm	1.87" | 47.5 mm
PATTERNS - NUMBER OF JETS BY LOCATION		
1 Front 8 Back 30° 9 Jets Total **Min Flow #4**	1 Front 8 Back 30° 9 Jets Total **Min Flow #4**	1 Front 8 Back 30° 9 Jets Total **Min Flow #4**
1 Front 16 Back 30° 17 Jets Total **Min Flow #6**	1 Front 16 Back 30° 17 Jets Total **Min Flow #6**	1 Front 16 Back 30° 17 Jets Total **Min Flow #6**
1 Front 3 Forward 45° 8 Back 30° 12 Jets Total **Min Flow #5**	1 Front 3 Forward 45° 8 Back 30° 12 Jets Total **Min Flow #5**	1 Front 3 Forward 45° 8 Back 30° 12 Jets Total **Min Flow #5**
1 Front 3 Forward 45° 12 Back 30° 16 Jets Total **Min Flow #6**	1 Front 3 Forward 45° 12 Back 30° 16 Jets Total **Min Flow #6**	1 Front 3 Forward 45° 12 Back 30° 16 Jets Total **Min Flow #6**
1 Front 3 Forward 45° 8 Radial 8 Back 30° 20 Jets Total **Min Flow #7**	1 Front 3 Forward 45° 8 Radial 8 Back 30° 20 Jets Total **Min Flow #7**	1 Front 3 Forward 45° 8 Radial 8 Back 30° 20 Jets Total **Min Flow #7**
1 Front 8 Radial 9 Jets Total **Min Flow #4**	1 Front 8 Radial 9 Jets Total **Min Flow #4**	1 Front 8 Radial 9 Jets Total **Min Flow #4**
1 Front 16 Radial 17 Jets Total **Min Flow #6**	1 Front 16 Radial 17 Jets Total **Min Flow #6**	1 Front 16 Radial 17 Jets Total **Min Flow #6**

*See details on all connection types in Section I.

FPC SERIES TUBE CLEANING NOZZLES

PART NO.	FPC1	FPC3	FPC4	FPC5	FPC6
NOZZLES SHOWN AS ACTUAL SIZE					
BLANK PART NO.	53487	53486	53484	53483	53482
INLET CONNECTION*	1/16" NPT Female*	1/8" NPT Female*	1/4" NPT Female*	3/8" NPT Female*	1/2" NPT Female*
OUTSIDE DIAMETER	.370" | 9.4 mm	.500" | 12.7 mm	.620" | 15.7 mm	870" | 22.1 mm	1.00" | 25.4 mm
OVERALL LENGTH	.51" | 13.0 mm	.58" | 14.7 mm	.75" | 19.1 mm	.88" | 22.4 mm	1.00" | 25.4 mm
PATTERNS - NUMBER OF JETS BY LOCATION					
PATTERN 1	1 Front 6 Back 30° 7 Jets Total **Min Flow #2**	1 Front 6 Back 30° 7 Jets Total **Min Flow #2**	1 Front 8 Back 30° 9 Jets Total **Min Flow #4**	1 Front 8 Back 30° 9 Jets Total **Min Flow #4**	1 Front 8 Back 30° 9 Jets Total **Min Flow #4**
PATTERN 2 FLEX OR RIGID LANCES	1 Front 12 Back 30° 13 Jets Total **Min Flow #5**	1 Front 12 Back 30° 13 Jets Total **Min Flow #5**	1 Front 16 Back 30° 17 Jets Total **Min Flow #6**	1 Front 16 Back 30° 17 Jets Total **Min Flow #6**	1 Front 16 Back 30° 17 Jets Total **Min Flow #6**
PATTERN 3 FLEX OR RIGID LANCES	1 Front 3 Forward 45° 6 Back 30° 10 Jets Total **Min Flow #4**	1 Front 3 Forward 45° 6 Back 30° 10 Jets Total **Min Flow #4**	1 Front 3 Forward 45° 8 Back 30° 12 Jets Total **Min Flow #5**	1 Front 3 Forward 45° 8 Back 30° 12 Jets Total **Min Flow #5**	1 Front 3 Forward 45° 8 Back 30° 12 Jets Total **Min Flow #5**
PATTERN 4 FLEX OR RIGID LANCES	1 Front 3 Forward 45° 8 Back 30° 12 Jets Total **Min Flow #5**	1 Front 3 Forward 45° 8 Back 30° 12 Jets Total **Min Flow #5**	1 Front 3 Forward 45° 12 Back 30° 16 Jets Total **Min Flow #6**	1 Front 3 Forward 45° 12 Back 30° 16 Jets Total **Min Flow #6**	1 Front 3 Forward 45° 12 Back 30° 16 Jets Total **Min Flow #6**
PATTERN 5 FLEX OR RIGID LANCES	1 Front 3 Forward 45° 6 Radial 6 Back 30° 16 Jets Total **Min Flow #6**	1 Front 3 Forward 45° 6 Radial 6 Back 30° 16 Jets Total **Min Flow #6**	1 Front 3 Forward 45° 8 Radial 8 Back 30° 20 Jets Total **Min Flow #7**	1 Front 3 Forward 45° 8 Radial 8 Back 30° 20 Jets Total **Min Flow #7**	1 Front 3 Forward 45° 8 Radial 8 Back 30° 20 Jets Total **Min Flow #7**
PATTERN 6 RIGID LANCE ONLY	1 Front 6 Radial 7 Jets Total **Min Flow #2**	1 Front 6 Radial 7 Jets Total **Min Flow #2**	1 Front 8 Radial 9 Jets Total **Min Flow #4**	1 Front 8 Radial 9 Jets Total **Min Flow #4**	1 Front 8 Radial 9 Jets Total **Min Flow #4**
PATTERN 7 RIGID LANCE ONLY	1 Front 12 Radial 13 Jets Total **Min Flow #5**	1 Front 12 Radial 13 Jets Total **Min Flow #5**	1 Front 16 Radial 17 Jets Total **Min Flow #6**	1 Front 16 Radial 17 Jets Total **Min Flow #6**	1 Front 16 Radial 17 Jets Total **Min Flow #6**

*See details on all connection types in Section I.

C SERIES TUBE CLEANING NOZZLES

PART NO.	C1	C2
NOZZLES SHOWN AS ACTUAL SIZE		
BLANK PART NO.	50541	50518
INLET CONNECTION*	5/16"-32 UNEF Female	5/16"-32 UNEF Female
OUTSIDE DIAMETER	.500" | 12.7 mm	.560" | 14.2 mm
OVERALL LENGTH	.40" | 10.2 mm	.47" | 11.9 mm
PATTERNS - NUMBER OF JETS BY LOCATION		
PATTERN 1 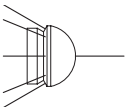	1 Front 8 Back 60° 9 Jets Total **Min Flow #4**	1 Front 8 Back 60° 9 Jets Total **Min Flow #4**
PATTERN 2 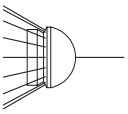	1 Front 16 Back 60° 17 Jets Total **Min Flow #6**	1 Front 16 Back 60° 17 Jets Total **Min Flow #6**
PATTERN 4 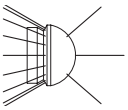	1 Front 3 Forward 45° 16 Back 60° 20 Jets Total **Min Flow #7**	1 Front 3 Forward 45° 16 Back 60° 20 Jets Total **Min Flow #7**

*See details on all connection types in Section I.

TOOLS & NOZZLES

ACCESSORIES

NOZZLE LOCKING PIN

Fits both C1 and C2 size nozzles.
Installed through hole in side of nozzle.
Part No. 25501 (Sold Individually)

PIN REMOVAL TOOL

For removal of pin.
Part No. 25749

FPT SERIES TUBE CLEANING NOZZLES

PART NO.	FPT1	FPT3	FPT4
NOZZLES SHOWN AS ACTUAL SIZE			
BLANK PART NO.	54153	54154	54156
INLET CONNECTION*	1/16″ NPT Female*	1/8″ NPT Female*	1/4″ NPT Female*
OUTSIDE DIAMETER	.370″ | 9.4 mm	.500″ | 12.7 mm	.665″ | 16.9 mm
OVERALL LENGTH	1.13″ | 28.7 mm	1.20″ | 30.5 mm	1.62″ | 41.1 mm
PATTERNS - NUMBER OF JETS BY LOCATION			
PATTERN 1 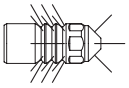	1 Front 2 Forward 45° 12 Back 30° 15 Jets Total **Min Flow #6**	1 Front 3 Forward 45° 18 Back 30° 22 Jets Total **Min Flow #8**	1 Front 3 Forward 45° 24 Back 30° 28 Jets Total **Min Flow #10**
PATTERN 2 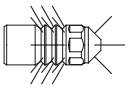	1 Front 3 Forward 45° 12 Back 45° 16 Jets Total **Min Flow #6**	1 Front 4 Forward 45° 18 Back 45° 23 Jets Total **Min Flow #8**	1 Front 6 Forward 45° 24 Back 45° 31 Jets Total **Min Flow #12**
PATTERN 3 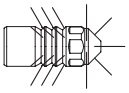	1 Front 2 Forward 45° 4 Radial 9 Back 30° 16 Jets Total **Min Flow #6**	1 Front 3 Forward 45° 6 Radial 12 Back 30° 22 Jets Total **Min Flow #8**	1 Front 4 Forward 45° 12 Radial 18 Back 30° 35 Jets Total **Min Flow #14**
PATTERN 4 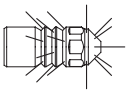	1 Front 2 Forward 45° 4 Radial 9 Back 45° 16 Jets Total **Min Flow #6**	1 Front 4 Forward 45° 6 Radial 12 Back 45° 23 Jets Total **Min Flow #8**	1 Front 8 Forward 45° 8 Radial 15 Back 45° 32 Jets Total **Min Flow #14**

*See details on all connection types in Section I.

FPT SERIES TUBE CLEANING NOZZLES

FPT5	FPT6
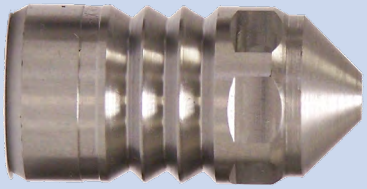	
54157	54158
3/8" NPT Female*	1/2" NPT Female*
.870" | 22.1 mm	1.040" | 26.4 mm
1.73" | 43.9 mm	2.10" | 53.3 mm
PATTERNS - NUMBER OF JETS BY LOCATION	
1 Front 4 Forward 45° 24 Back 30° 29 Jets Total **Min Flow #12**	1 Front 4 Forward 45° 24 Back 30° 29 Jets Total **Min Flow #10**
1 Front 8 Forward 45° 24 Back 45° 33 Jets Total **Min Flow #14**	1 Front 8 Forward 45° 24 Back 45° 33 Jets Total **Min Flow #14**
1 Front 4 Forward 45° 12 Radial 18 Back 30° 35 Jets Total **Min Flow #14**	1 Front 4 Forward 45° 12 Radial 18 Back 30° 35 Jets Total **Min Flow #14**
1 Front 8 Forward 45° 12 Radial 18 Back 45° 39 Jets Total **Min Flow #15**	1 Front 8 Forward 45° 12 Radial 18 Back 45° 39 Jets Total **Min Flow #15**

*See details on all connection types in Section I.

E SERIES TUBE CLEANING NOZZLES

PART NO.	E0	E1	E2
NOZZLES SHOWN AS ACTUAL SIZE			
BLANK PART NO.	52134	51125	51123
INLET CONNECTION*	1/16" NPT Female*	1/8" NPT Female*	1/4" NPT Female*
OUTSIDE DIAMETER	.375" | 9.5 mm	.500" | 12.7 mm	.665" | 16.9 mm
OVERALL LENGTH	1.17" | 29.7 mm	1.40" | 35.6 mm	1.76" | 44.7 mm
PATTERNS - NUMBER OF JETS BY LOCATION			
PATTERN 1 FLEX OR RIGID LANCES 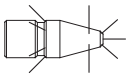	1 Front 3 Forward 45° 4 Radial 6 Back 45° 14 Jets Total **Min Flow #5**	1 Front 3 Forward 45° 6 Radial 6 Back 45° 16 Jets Total **Min Flow #6**	1 Front 3 Forward 45° 6 Radial 6 Back 45° 16 Jets Total **Min Flow #6**
PATTERN 2 FLEX OR RIGID LANCES 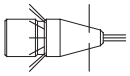	N/A	4 Front 6 Radial 12 Back 45° 22 Jets Total **Min Flow #8**	4 Front 6 Radial 12 Back 45° 22 Jets Total **Min Flow #8**

*See details on all connection types in Section I.

E SERIES TUBE CLEANING NOZZLES

E3	E4
51121	51119
3/8" NPT Female*	1/2" NPT Female*
2.10" | 53.3 mm	2.27" | 57.7 mm
.870" | 22.1 mm	1.040" | 26.4 mm
PATTERNS - NUMBER OF JETS BY LOCATION	
1 Front 3 Forward 45° 8 Radial 8 Back 45° 20 Jets Total **Min Flow #7**	1 Front 3 Forward 45° 8 Radial 8 Back 45° 20 Jets Total **Min Flow #7**
4 Front 8 Radial 16 Back 45° 28 Jets Total **Min Flow #10**	4 Front 8 Radial 16 Back 45° 28 Jets Total **Min Flow #10**

*See details on all connection types in Section I.

EX SERIES TUBE CLEANING NOZZLES

PART NO.	EX1	EX3	EX4
NOZZLES SHOWN AS ACTUAL SIZE			
BLANK PART NO.	54168	54169	54171
INLET CONNECTION*	1/16" NPT Female*	1/8" NPT Female*	1/4" NPT Female*
OUTSIDE DIAMETER	.375" | 9.5 mm	.500" | 12.7 mm	.665" | 16.9 mm
OVERALL LENGTH	1.29" | 32.8 mm	1.45" | 36.8 mm	1.72" | 43.7 mm
PATTERNS - NUMBER OF JETS BY LOCATION			
PATTERN 1 FLEX OR RIGID LANCES 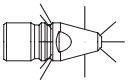	1 Front 3 Forward 45° 4 Radial 8 Back 30° 16 Jets Total **Min Flow #6**	1 Front 4 Forward 45° 8 Radial 10 Back 30° 23 Jets Total **Min Flow #8**	1 Front 6 Forward 45° 8 Radial 16 Back 30° 31 Jets Total **Min Flow #12**
PATTERN 2 FLEX OR RIGID LANCES 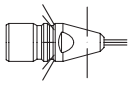	N/A	4 Front 6 Radial 10 Back 30° 20 Jets Total **Min Flow #7**	4 Front 8 Radial 12 Back 30° 24 Jets Total **Min Flow #9**
PATTERN 3 FLEX OR RIGID LANCES 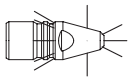	1 Front 3 Forward 60° 3 Radial 6 Back 60° 13 Jets Total **Min Flow #5**	3 Front 3 Forward 60° 4 Radial 8 Back 60° 18 Jets Total **Min Flow #6**	4 Front 4 Forward 60° 8 Radial 12 Back 60° 28 Jets Total **Min Flow #10**
PATTERN 4 FLEX OR RIGID LANCES 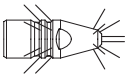	N/A	2 Front 2 Forward 60° 6 Forward 30° 12 Back 45° 22 Jets Total **Min Flow #8**	3 Front 3 Forward 60° 8 Forward 30° 16 Back 45° 30 Jets Total **Min Flow #12**
PATTERN 5 FLEX OR RIGID LANCES 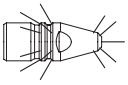	1 Front 3 Forward 45° 3 Forward 30° 6 Back 30° 6 Back 60° 19 Jets Total **Min Flow #6**	1 Front 3 Forward 45° 3 Forward 30° 8 Back 30° 6 Back 60° 21 Jets Total **Min Flow #7**	1 Front 4 Forward 45° 4 Forward 30° 8 Back 30° 6 Back 60° 23 Jets Total **Min Flow #8**

*See details on all connection types in Section I.

US & Canada: 800-231-8192 or 832-590-1300 | **waterblast.com**

Jetstream Subsidiary of Federal Signal Corporation

EX SERIES TUBE CLEANING NOZZLES

EX5	EX6
54172	54173
3/8" NPT Female*	1/2" NPT Female*
.875" | 22.2 mm	1.040" | 26.4 mm
2.21" | 56.1 mm	2.37" | 60.2 mm
PATTERNS - NUMBER OF JETS BY LOCATION	
1 Front 6 Forward 45° 8 Radial 16 Back 30° 31 Jets Total **Min Flow #12**	1 Front 6 Forward 45° 8 Radial 16 Back 30° 31 Jets Total **Min Flow #12**
4 Front 8 Radial 16 Back 30° 28 Jets Total **Min Flow #10**	4 Front 8 Radial 16 Back 30° 28 Jets Total **Min Flow #10**
4 Front 4 Forward 60° 8 Radial 12 Back 60° 28 Jets Total **Min Flow #10**	4 Front 4 Forward 60° 8 Radial 12 Back 60° 28 Jets Total **Min Flow #10**
3 Front 3 Forward 60° 8 Forward 30° 16 Back 45° 30 Jets Total **Min Flow #12**	4 Front 4 Forward 60° 8 Forward 30° 24 Back 45° 40 Jets Total **Min Flow #15**
1 Front 4 Forward 45° 4 Forward 30° 8 Back 30° 6 Back 60° 23 Jets Total **Min Flow #8**	1 Front 4 Forward 45° 4 Forward 30° 8 Back 30° 6 Back 60° 23 Jets Total **Min Flow #9**

*See details on all connection types in Section I.

MP SERIES TUBE CLEANING NOZZLES

PART NO.	MP1	MP2	MP3	MP4
NOZZLES SHOWN AS ACTUAL SIZE				
BLANK PART NO.	51114	51115	51116	51117
INLET CONNECTION*	1/16" NPT Male*	1/8" NPT Male*	1/4" NPT Male*	3/8" NPT Male*
OUTSIDE DIAMETER	3.75" | 9.5 mm	.500" | 12.7 mm	.625" | 15.9 mm	75" | 19.1 mm
OVERALL LENGTH	.96" | 24.4 mm	1.21" | 30.7 mm	1.43" | 36.3 mm	1.60" | 40.6 mm
PATTERNS - NUMBER OF JETS BY LOCATION				
PATTERN 1 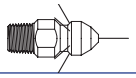	1 Front 6 Back 30° 7 Jets Total **Min Flow #2**	1 Front 8 Back 30° 9 Jets Total **Min Flow #4**	1 Front 8 Back 30° 9 Jets Total **Min Flow #4**	1 Front 8 Back 30° 9 Jets Total **Min Flow #4**
PATTERN 2 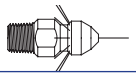	1 Front 12 Back 30° 13 Jets Total **Min Flow #5**	1 Front 16 Back 30° 17 Jets Total **Min Flow #6**	1 Front 16 Back 30° 17 Jets Total **Min Flow #6**	1 Front 16 Back 30° 17 Jets Total **Min Flow #6**
PATTERN 3 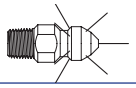	1 Front 3 Forward 45° 6 Back 30° 10 Jets Total **Min Flow #4**	1 Front 3 Forward 45° 8 Back 30° 12 Jets Total **Min Flow #5**	1 Front 3 Forward 45° 8 Back 30° 12 Jets Total **Min Flow #5**	1 Front 3 Forward 45° 8 Back 30° 12 Jets Total **Min Flow #5**
PATTERN 4 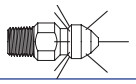	1 Front 3 Forward 45° 8 Back 30° 12 Jets Total **Min Flow #5**	1 Front 3 Forward 45° 6 Radial 6 Back 30° 16 Jets Total **Min Flow #6**	1 Front 6 Radial 7 Jets Total **Min Flow #2**	1 Front 12 Radial 13 Jets Total **Min Flow #5**
PATTERN 5 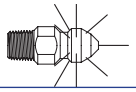	1 Front 3 Forward 45° 12 Back 30° 16 Jets Total **Min Flow #6**	1 Front 3 Forward 45° 8 Radial 8 Back 30° 20 Jets Total **Min Flow #7**	1 Front 8 Radial 9 Jets Total **Min Flow #4**	1 Front 16 Radial 17 Jets Total **Min Flow #6**
PATTERN 6 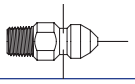	1 Front 3 Forward 45° 12 Back 30° 16 Jets Total **Min Flow #6**	1 Front 3 Forward 45° 8 Radial 8 Back 30° 20 Jets Total **Min Flow #7**	1 Front 8 Radial 9 Jets Total **Min Flow #4**	1 Front 16 Radial 17 Jets Total **Min Flow #6**
PATTERN 7 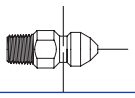	1 Front 3 Forward 45° 12 Back 30° 16 Jets Total **Min Flow #6**	1 Front 3 Forward 45° 8 Radial 8 Back 30° 20 Jets Total **Min Flow #7**	1 Front 8 Radial 9 Jets Total **Min Flow #4**	1 Front 16 Radial 17 Jets Total **Min Flow #6**

*See details on all connection types in Section I.

MS SERIES TUBE CLEANING NOZZLES

PART NO.	MS1	MS2	MS3
NOZZLES SHOWN AS ACTUAL SIZE			
BLANK PART NO.	51113	51060	50468
INLET CONNECTION**	#12-28UNF MALE	1/4"-28UNF MALE	5/16"-24UNF MALE
DIAMETER	.250" | 6.4 mm	.312" | 7.9 mm	.375" | 9.5 mm
LENGTH	.95" | 24.4 mm	1.06" | 26.9 mm	1.12 | 28.4 mm
PATTERNS - NUMBER OF JETS BY LOCATION			
PATTERN 1 FLEX OR RIGID LANCE 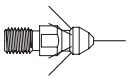	1 Front 6 Back 45° 7 Jets Total **Min Flow #2**	1 Front 6 Back 45° 7 Jets Total **Min Flow #2**	1 Front 6 Back 45° 7 Jets Total **Min Flow #2**
PATTERN 2 FLEX OR RIGID LANCE 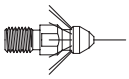	1 Front 12 Back 45° 13 Jets Total **Min Flow #5**	1 Front 12 Back 45° 13 Jets Total **Min Flow #5**	1 Front 12 Back 45° 13 Jets Total **Min Flow #5**
PATTERN 3 FLEX OR RIGID LANCE 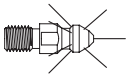	1 Front 3 Forward 45° 6 Back 45° 10 Jets Total **Min Flow #4**	1 Front 3 Forward 45° 6 Back 45° 10 Jets Total **Min Flow #4**	1 Front 3 Forward 45° 6 Back 45° 10 Jets Total **Min Flow #4**
PATTERN 4 FLEX OR RIGID LANCE 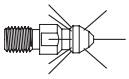	1 Front 3 Forward 45° 8 Back 45° 12 Jets Total **Min Flow #5**	1 Front 3 Forward 45° 8 Back 45° 12 Jets Total **Min Flow #5**	1 Front 3 Forward 45° 8 Back 45° 12 Jets Total **Min Flow #5**
PATTERN 5 FLEX OR RIGID LANCE 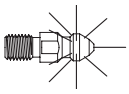	1 Front 3 Forward 45° 6 Radial 6 Back 45° 16 Jets Total **Min Flow #6**	1 Front 3 Forward 45° 6 Radial 6 Back 45° 16 Jets Total **Min Flow #6**	1 Front 3 Forward 45° 6 Radial 6 Back 45° 16 Jets Total **Min Flow #6**
PATTERN 6 RIGID LANCE ONLY 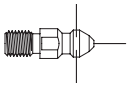	1 Front 6 Radial 7 Jets Total **Min Flow #2**	1 Front 6 Radial 7 Jets Total **Min Flow #2**	1 Front 6 Radial 7 Jets Total **Min Flow #2**
PATTERN 7 RIGID LANCE ONLY 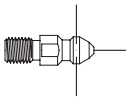	1 Front 12 Radial 13 Jets Total **Min Flow #5**	1 Front 12 Radial 13 Jets Total **Min Flow #5**	1 Front 12 Radial 13 Jets Total **Min Flow #5**

*See details on all connection types in Section I.

TP SERIES THRUSTERS TUBE CLEANING NOZZLES

PART NO.	TP4	TP5	TP6
NOZZLES SHOWN AS ACTUAL SIZE			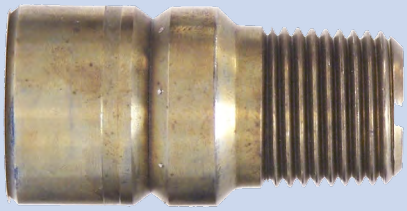
BLANK PART NO.	54709	52138	52151
INLET CONNECTION*	1/4" NPT Female	3/8" NPT Female	1/2" NPT Female
OUTLET CONNECTION*	1/4" NPT Male	3/8" NPT Male	1/2" NPT Male
OUTSIDE DIAMETER	.665" | 16.9 mm	.875" | 22.2 mm	1.040" | 26.4 mm
OVERALL LENGTH	1.63" | 41.4 mm	1.65" | 41.9 mm	2.03" | 51.6 mm
PATTERNS - NUMBER OF JETS BY LOCATION			
PATTERN 1 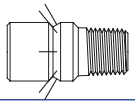	8 Back 30° **Min Flow #3**	8 Back 30° **Min Flow #3**	8 Back 30° **Min Flow #3**
PATTERN 2 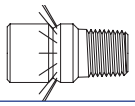	16 Back 30° **Min Flow #6**	16 Back 30° **Min Flow #6**	16 Back 30° **Min Flow #6**

*See details on all connection types in Section I.

ABRASIVE INJECTOR NOZZLE

- Provides powerful, cohesive mix of water and abrasive
- Easily replaceable, precision-drilled spool nozzle creates a powerful, focused waterjet and provides suction force to pull the abrasive media into the nozzle and mix with pressurized water. No air feed required!
- Wear-resistant, lightweight boron carbide abrasive nozzle
- Integral nozzle shut-off valve prevents clogging of abrasive
- Heat-treated stainless steel construction
- Lightweight, compact design
- Includes #5 Spool Nozzle

PART NO.	INLET WATER CONNECTION*	INLET ABRASIVE CONNECTION*	ASSEMBLY WEIGHT		MAX. OPERATING PRESSURE	
			lb	kg	psi	bar
52810	3/8" NPT Female	1/2" Hose Barb	1.5	0.7	15,000	1034

*See details on all connection types in Section I.

Before

After

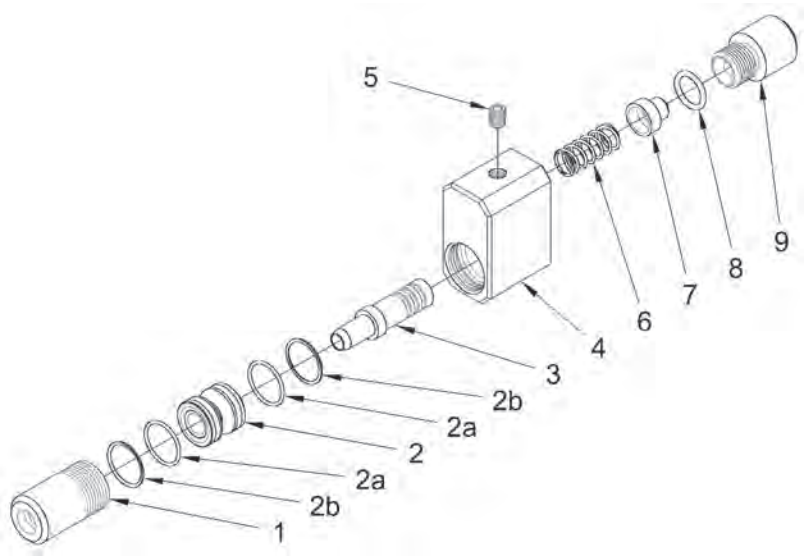

PART BREAKDOWN

ITEM	PART NO.	DESCRIPTION	ITEM	PART NO.	DESCRIPTION
1	52815	Abrasive Nozzle	4	52706	Body
2	53106	#2 Spool Nozzle	5	25395	Plug
	53107	#5 Spool Nozzle	6	26534	Spring
2a	26920	O-Ring	7	52711	Valve
2b	27030	Backup Ring	8	25228	O-Ring
3	52708	Hose Barb	9	52709	Adapter, 3/8" NPT Female

SPOOL NOZZLES

- Control flow of water through the nozzle
- Two standard flow ratings are available
- Custom drilled spool nozzles available

PART NO.	FLOW RATE	FLOW AT SPECIFIED PRESSURES (PSI / BAR)																	
		3,000	206	5,000	344	6,000	413	8,000	551	10,000	689	11,000	758	12,000	827	14,000	965	15,000	1034
		gpm	lpm	gpm	lpm	gpm	lpm	gpm	lpm	gpm	lpm	gpm	lpm	gpm	lpm	gpm	lpm	gpm	lpm
53106	2	1.4	5.3	1.8	7.1	1.9	7.1	2.2	8.3	2.5	9.4	2.6	9.8	2.7	10.2	3.0	11.3	3.1	12.1
53107	5	3.6	13.6	4.6	17.4	5.1	19.3	5.9	22.3	6.6	24.9	6.9	26.1	7.2	27.4	7.8	29.5	8.0	30.2

ABRASIVES

SHARPJET GARNET

55 lb (25 kg) bag

PART NO.	GRIT
70034-36	36
70034-50	50
70034-60	60
70034-80	80
70034-120	120

MAXXSTRIP MAGNESIUM SULPHATE/ KIESERITE

50 lb (23 kg) bag

PART NO.	MESH SIZE
J70378-C	20-40
J70378-M	40-60
J70378-F	60-80

SOFSTRIP SODIUM BICARBONATE

50 lb (23 kg) bag

PART NO.	MESH SIZE
J70377-XL	60-80
J70377-M	80-100

ABRASIVE POT

Part No. 27301

SAFETY APPAREL & EQUIPMENT

SAFETY. The one word every organization places at the top of the list when thinking about an employee. Jetstream understands the importance of conducting a safe environment when working in any high pressure waterblasting application. From personal protective equipment (PPE) to caution tape and signage, Jetstream provides a complete line of safety products to ensure a well protected job site and operator safety.

Products included in this section:

VISUAL SAFETY SYSTEM

- Jetstream's pioneered Visual Safety System
- Safety Protection through color coding of parts
- Guns, Foot Guns, Hoses, Lances, Fittings, and Decals

SAFETY SHROUDS

- Standard Waterblasting Safety Shrouds
- TST® Hose Shrouds
- TST Hose Connection Covers
- Covered Safety Whips

FLEX LANCE SAFETY

- Hand-Held Lance Grip and Accessories
- Pipe and Tube Cleaning Exit Safety Devices

PERSONAL PROTECTIVE EQUIPMENT (PPE)

- TurtleSkin® WaterArmor
- TST Waterjet Protection

SAFETY ACCESSORIES

- Sonetics® APEX wireless headsets
- Safety Glasses, Goggles, Boots, and Gloves
- Face Shield, Hard Hats, and Ear Protection
- Protection Suits

SAFETY TAPE, SIGNS AND DECALS

SAFETY HOSE CHECKS

- Nylon
- Stainless Steel

SAFETY

VISUAL SAFETY SYSTEM DECALS
are highly visible and brightly colored to provide operators and supervisors with visual confirmation that all water-blast components, not colored, are appropriately matched to pressure ratings.
Part No. 71742

VISUAL SAFETY SYSTEM

PROTECT YOUR WORKERS AND THE WATERBLASTING EQUIPMENT WITH JETSTREAM'S VISUAL SAFETY SYSTEM.

Ensuring the operator is using the correct equipment is now identifiable from a distance. Jetstream's Visual Safety System uses highly visible and color-matched decals and additional markers to clearly show water-blast components in use are correctly and safely suited to current pump pressures.

Jetstream is now following the WJTA recommended colors to visually identify the pressure being used on a job site:

- 15,000 psi – GREEN
- 20,000 psi – BLUE
- 40,000 psi – ORANGE

All 15K psi rated Jetstream lances, adapters, couplers and connectors are color-coded green to represent 15,000 psi (1034 bar) working pressure.

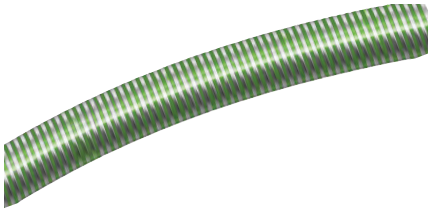

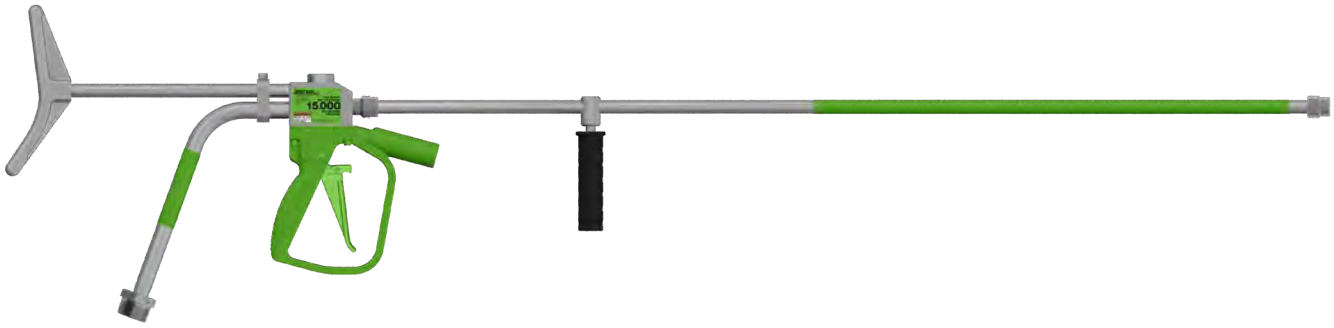

SAFETY

SAFETY SHROUDS

Designed for use with 15,000 psi control guns that have pipe thread inlet connections, these safety shroud assemblies improve operator protection in the event of a hose or end fitting failure by completely enclosing the hose and connection fittings. Assemblies include shroud, nut, and a six foot whip hose, or items can be purchased individually.

- Shroud is constructed of a wire braided stainless steel inner core, surrounded by strands of woven ballistic fiber and a durable, fiber reinforced, abrasion resistant thermoplastic outer cover for maximum protection and flexibility.
- Shroud is easily fastened or removed from rear barrel of control gun by a steel nut which fits over connection fittings.
- Whip hoses are lengths of waterblast hose designed to be a cost effective solution for ensuring operator safety. They are meant to be replaced at regular intervals to ensure that the hose nearest the operator's body is always in good condition.
- Contact factory for connection types other than those listed below

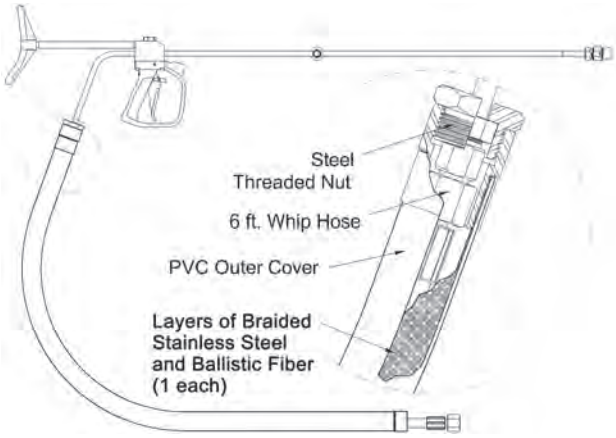

PART NO.	LENGTH		HOSE CONNECTION*	HOSE I.D.		REPLACEMENT PARTS				MAX. OPERATING PRESSURE	
	ft	m		in	mm	SHROUD	NUT	WHIP HOSE**	WHIP MATERIAL	psi	bar
59391	6	1.8	1/2" NPT	.50	12.7	28860	58100	52241-0060505	Rubber	15,000	1,034
58101	10	3.0	1/2" NPT	.50	12.7	28860-10	58100	52241-0100505	Rubber	15,000	1,034

*See Section I for a description of each connection type.
**Whip Hoses listed do not have abrasion or burst shield guards and are not intended for use near an operator without a safety shroud.

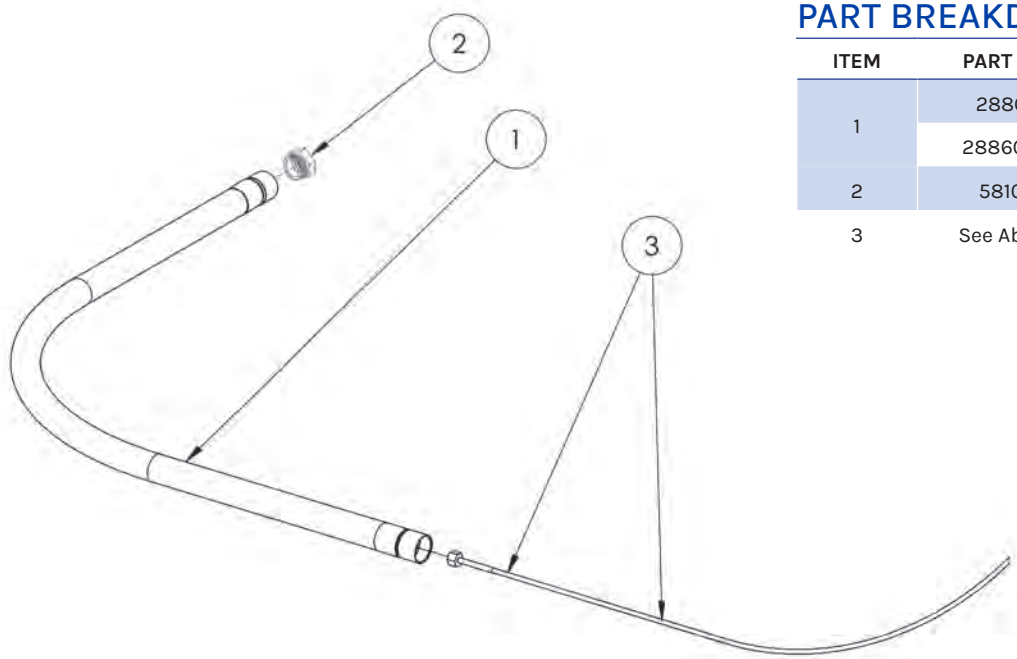

PART BREAKDOWN

ITEM	PART NO.	DESCRIPTION
1	28860	Shroud, 6 ft.
	28860-10	Shroud, 10 ft.
2	58100	Nut
3	See Above	Whip Hose

SAFETY

TST® HOSE SHROUDS

PART NO.	SIZE
59008	36mm ID x 750mm long
59009	36mm ID x 1400mm long
59010	36mm ID x 180mm long
59011	47mm ID x 1400mm long swivel
59012	59mm ID x 750mm long
59013	59mm ID x 1400mm long
59014	59mm ID x 1800mm long

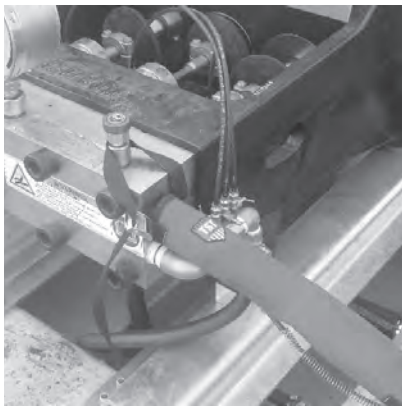

HOSE CONNECTION COVER

Perfect use to protect connections on pumps or foot panels. The cover has an adjustable strap and the other end has two loops for flexible use.

PART NO.	SIZE
62257	50mm ID x 400mm long

STRAIN RELIEF HOSE

Used for flex lance applications, the strain relief hose prevents kinking of the flex lance to extend service life.

- Rubber hose material is more flexible and manageable than thermoplastic flex lance material
- Connects the foot control gun to the flex lance

PART NO.	LENGTH		HOSE CONNECTION*		HOSE I.D.		MAX. OPERATING PRESSURE	
	ft	m	INLET CONNECTION* (TO FOOT GUN)	OUTLET CONNECTION* (TO FLEX LANCE)	in	mm	psi	bar
50135	3	0.9	1/2" NPT Male	1/4" NPT Male	.50	12.7	15,000	1034
50138	3	0.9	1/2" NPT Male	1/8" NPT Male	.50	12.7	15,000	1034

* See Section I for a description of each connection type.

SAFETY

SAFETY HOSE CHECKS

NYLON HOSE CHECK - HIGH STRENGTH

One Size Fits All.
Part No. 66743

CONTAINMENT GRIP HOSE CHECK

Coated, Galvanized Carbon Steel

PART NO.	HOSE O.D.
63210	3/4" - 1 1/4"
59291	1 1/4" - 2"
61255	2" - 2 3/4"

SHACKLE ANCHOR FOR CONTAINMENT GRIP HOSE CHECKS

Part No. 65670

LOCKING COTTER PIN FOR SHACKLE ANCHOR

Part No. 65671

FLEX LANCE SAFETY GRIP

For use in flex lance tube cleaning operations, the safety grip prevents a nozzle from unexpectedly exiting a tube by providing a stop through which the sleeve of the flex lance will not pass. Package includes handle, lance stop retainer for use on tubes up to 3/4" O.D. Choose lance stop below (not included). **Part No. 54164**

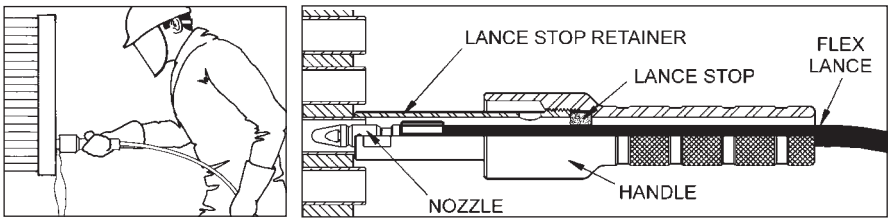

SAFETY GRIP ACCESSORIES

LANCE STOPS

Choose lance stops below based on flex lance ID.

LANCE STOP RETAINERS

Choose lance stop retainers based on the outside diameter of the tube to be cleaned.

SAFETY GRIP SHIELD

Clear, plastic shield attaches to the safety grip handle to deflect water exiting the tube. **Part No. J55785**

LANCE STOP PART NO.	FLEX LANCE SERIES NUMBER	FLEX LANCE NOMINAL I.D.	
		in	mm
51779	27560	5/16	8
51044*	26108	1/4	6
51038*	26106	3/16	5
51036*	26104	5/32	4
	28596	1/8	3

PART NO.	LENGTH
51055	for tubes up to 3/4" O.D. (included in package)
51425	for tubes up to 1" O.D.
51427	for tubes up to 2" O.D.

SAFETY

FLEXSTOP™

The FlexStop Lance Safety Device protects the operator from a flex lance exiting a tube sheet during cleaning operations in either a horizontal or vertical application. An articulating arm, two friction disc hubs and a telescoping tube allow for a wide range of adjustment and positioning possibilities. Durable stainless steel construction. **Part No. 66288**

The FlexStop Kit contains the articulating arm, the safety grip assembly with Lexan splash guard, all four lance stops, both guide bushings, an extension tube, and two flange clamps. **Part No. 61374**

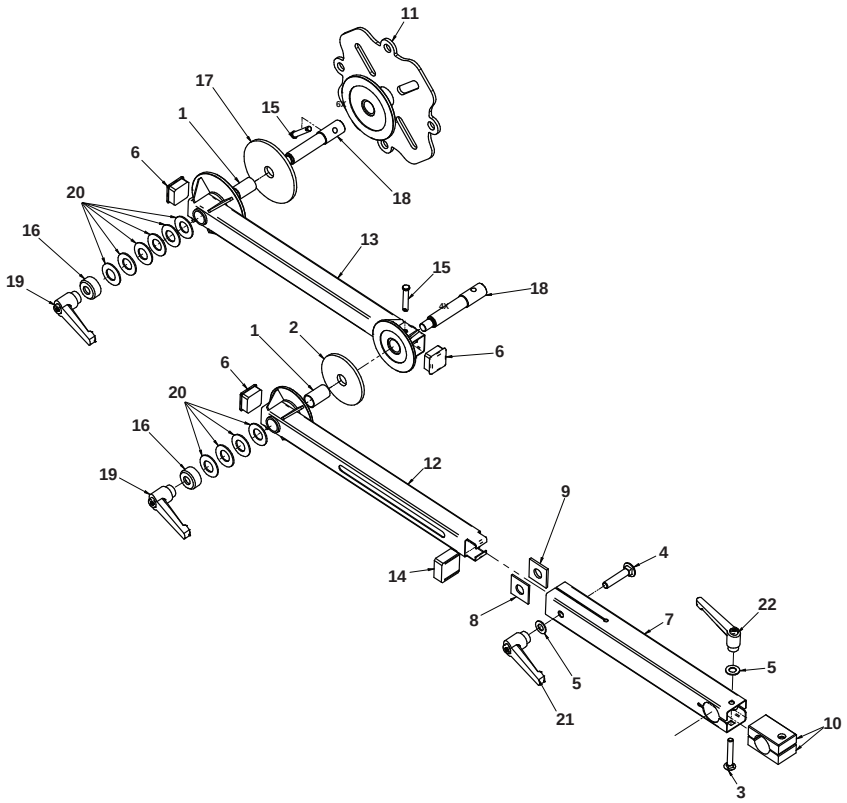

LANCE STOPS

LANCE STOP PART NO.	FLEX LANCE NOMINAL I.D.		HOSE TYPE
	in	mm	
51036	.325	8	4/2 & 3/2
51038	.445	11	5/2
51044	.510	13	6/2 & 6/4
51779	.610	15	8/2 & 8/6

GUIDE BUSHINGS

GUIDE BUSHING PART NO.	NOMINAL I.D.	
	in	mm
60288	.550	14
60289	.780	20

PART BREAKDOWN

ITEM	PART NO.	DESCRIPTION	ITEM	PART NO.	DESCRIPTION
1	60311	Sleeve Bearing	12	66298	Outer Arm
2	60998	4" Friction Element	13	66299	Inner Arm
3	61046	Capscrew	14	66300	Centering Block
4	61050	Capscrew	15	66302	Clevis Pin
5	61148	Thrust Washer	16	66865	Friction Plate Plunger
6	66274	Finishing Plug	17	66866	5" Friction Element
7	66291	Outer Telescoping Arm	18	66867	Pivot Pin
8	66293	Spacer, Telescoping Arm, Thin	19	66870	Adjustment Handle
9	66294	Spacer, Telescoping Arm, Thick	20	66871	Disc Spring
10	66296	Clamp Block	21	66889	Adjustment Handle
11	66297	Mounting Plate	22	66890	Adjustment Handle

THE WARDEN™

The Jetstream Warden is an anti-withdrawal device used for pipe cleaning applications with pipes ranging from 5"-18". With the multiple mounting location points, the pipe shield provides complete pipe coverage with a lockable shutter to allow large debris removal.
Part No. 61447

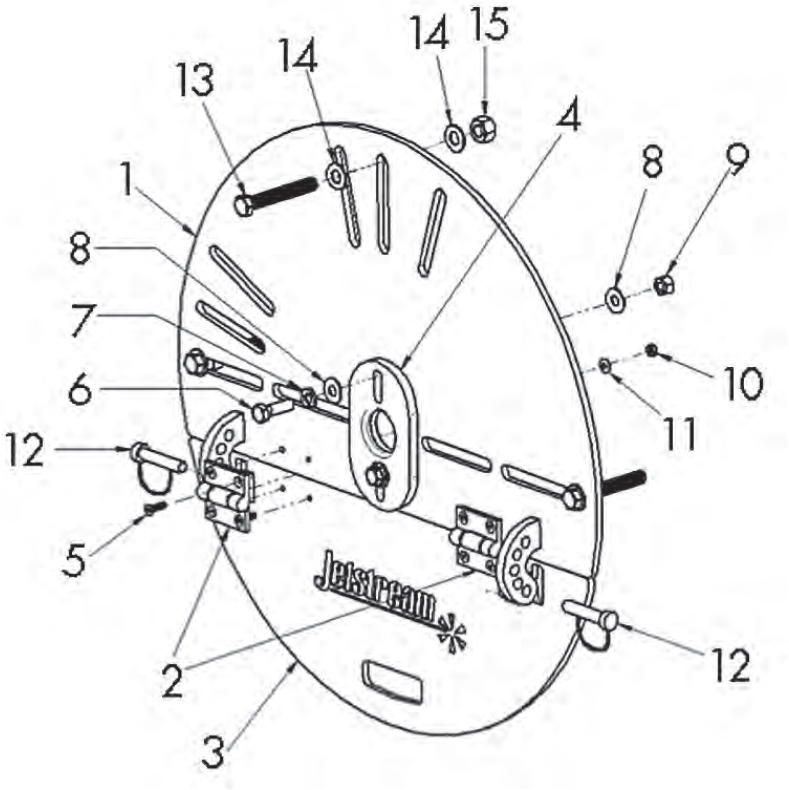

PART BREAKDOWN

ITEM	PART NO.	DESCRIPTION	ITEM	PART NO.	DESCRIPTION
1	61283	Pipe Cover Wldt, 1-19" Dia.	9	26562	Nut .38 C,Hx
2	61448	Shield Door Hinge	10	27449	Nut #10-24,Hx,Nylok
3	61284	Tilt Panel Wldt	11	J70804	Washer #10 Flat
4	61288	Dia. Adjustment Plate	12	61449	.375" Dia. Locking Pin
5	61461	Capscrew #10-24 X .87	13	61450	Capscrew .43 C X 3.0 SS
6	27126	Capscrew .38 C X 1.25	14	59229	Washer .44 Flat
7	25249	Washer .38 Lock	15	26834	Nut .44 F,Hx Lock
8	25251	Washer .38 Flat			

CENTRALIZERS

- Three styles are available.
- Supports the tool while providing a controlled, even cleaning along with damage protection.

SKID STYLE

Used in pipes with and without elbows up to 10 in. (250 mm) in diameter. Designed to be used with RotoMag™ X22 and Swivel X15/X22.

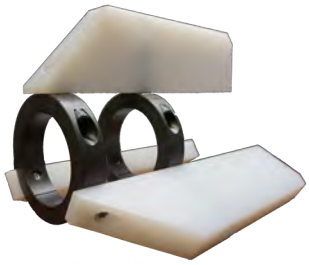

REPLACEMENT RUNNERS

Three plastic runners and six screws.

PART NO.	DIAMETER	
	in	mm
66104-06	6.0	150
66104-08	8.0	200
66104-10	10.0	250

RotoMag X22 in Skid Centralizer

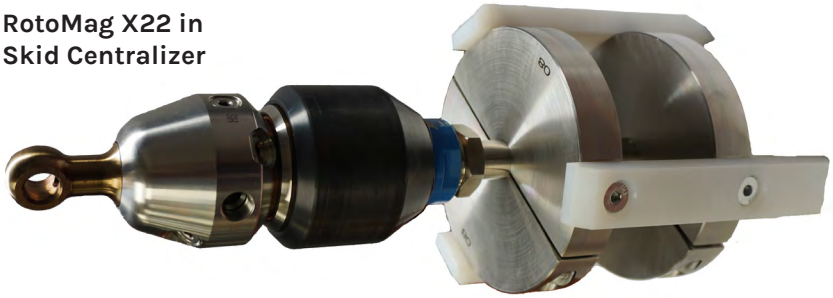

ROTOMAG X22

PART NO.	DIAMETER	
	in	mm
63842-ROTO-6	6.0	150
63842-ROTO-8	8.0	200
63842-ROTO-10	10.0	250

NOTE: Does not include nipple or fittings.

RELATED ITEMS

Use 20K fittings listed below and adapt to 15K hose using proper fittings.

PART NO.	DESCRIPTION
29108-08	3/4" MP LH Tube Nipple
28383 (2)	3/4" MP Gland
28384 (2)	3/4" MP Collar

Swivel in Skid Centralizer

SWIVEL X15/X22

PART NO.	DIAMETER	
	in	mm
63842-SWVL-6	6.0	150
63842-SWVL-8	8.0	200
63842-SWVL-10	10.0	250

SAFETY

CAGE STYLE

Recommended for navigating complex piping arrangements to clean built up debris. Designed for RotoMag X22 (clamp to nipple), Swivel X15/X22 (clamp to tool), and H_3Orbiter (clamp to tool).

RotoMag X22 with Nozzle Extensions in Cage Centralizer

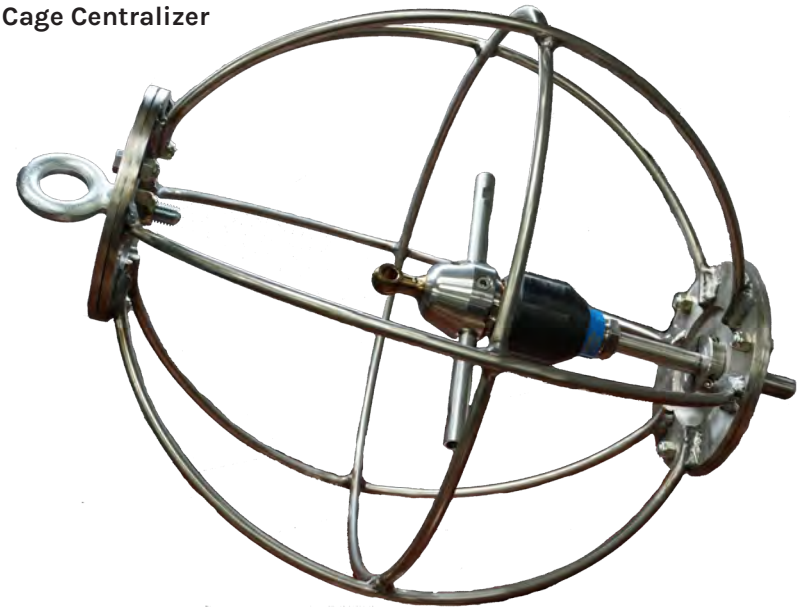

ROTOMAG X22

PART NO.	DIAMETER	
	in	mm
63843-ROTO	18.75	475

63843-ROTO does not include nipple or fittings recommended as follows:

RELATED ITEMS

PART NO.	DESCRIPTION
55450-7	7" long 1/2" NPT Male Nipple
28903	1/2" NPTF x 3/4" MP Male Adapter (Nipple to Tool)
27722 (4)	Capscrew, .25 F x 1.0"

NOTE: *3/4" NPT Nipple WILL NOT fit in cage centralizer because OD is too large. If 1/2" NPT Nipple is used, quantity (4) of capscrew 27722 must be used for the clamps to fit. Hose to nipple adapter may be needed based on end fitting.

Swivel in Cage Centralizer

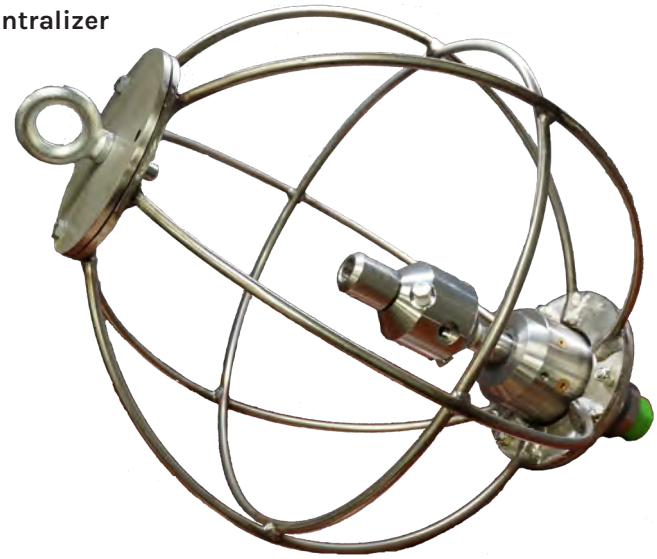

SWIVEL X15/X22

PART NO.	DIAMETER	
	in	mm
63843-SWVL	18.75	475

SAFETY

CAGE STYLE

H_3ORBITER		
PART NO.	DIAMETER	
	in	mm
63843-H30	11.75	298

SCISSOR STYLE

Designed for straight pipe runs only. The adjustable frames allow for an effective pipe clean anywhere from 9-60 inches (230-1500 mm) in diameter. Compatible with most tools. Comes with a central lance (shown below) for mounting tools.

PART NO.	CONNECTION	PRESSURE	WEIGHT	LENGTH
SMALL 9-18" [230-460 MM] PIPE DIAMETER				
64452-S15-8	1/2" NPT	15K PSI	20 lb. (9 kg)	36 in. (915 mm)
64452-S15-12	3/4" NPT	15K PSI	20 lb. (9 kg)	36 in. (915 mm)
64452-S20	3/4" MP Male Tube	20K PSI	20 lb. (9 kg)	36 in. (915 mm)
64452-S40	9/16" HP Male Tube	40K PSI	20 lb. (9 kg)	36 in. (915 mm)
MEDIUM 13-40" [330-1000MM] PIPE DIAMETER				
64452-M15-8	1/2" NPT	15K PSI	32 lb. (15 kg)	48 in. (1220 mm)
64452-M15-12	3/4" NPT	15K PSI	32 lb. (15 kg)	48 in. (1220 mm)
64452-M20	3/4" MP Male Tube	20K PSI	32 lb. (15 kg)	48 in. (1220 mm)
64452-M40	9/16" HP Male Tube	40K PSI	32 lb. (15 kg)	48 in. (1220 mm)
LARGE 16-60" [410-1500 MM] PIPE DIAMETER				
64452-L15-8	1/2" NPT	15K PSI	40 lb. (18 kg)	72 in. (1850 mm)
64452-L15-12	3/4" NPT	15K PSI	40 lb. (18 kg)	72 in. (1850 mm)
64452-L20	3/4" MP Male Tube	20K PSI	40 lb. (18 kg)	72 in. (1850 mm)
64452-L40	9/16" HP Male Tube	40K PSI	40 lb. (18 kg)	72 in. (1850 mm)

VERSABOOM™

Large tanks and vessels can be challenging to clean. They come is all shapes and sizes, and they often have limited access, making it hard to get a cleaning tool into the proper position to ensure a complete cleaning.

The Versaboom™ is a positioning device designed to hold a 3D waterblast tool in a desired location inside tanks and vessels with limited access. **(Part No. 67901)**

- Adjustable extensions make it easy to extend or retract the cleaning tool to a variety of insertion depths and angles for optimal cleaning
- Aluminum mounting plate clamps to the tank or vessel during cleaning, increasing operator safety
- Access hatch in the mounting plate allows the operator to visually position the cleaning tool and check cleaning progress
- Easy to set up and operate; no special tools are required

PART NO.	MAX. HOSE I.D.		MAX. END FITTING		WEIGHT	
	in	mm	in	mm	lbs	kg
67901	.50	12.7	1.5	38.1	80	36

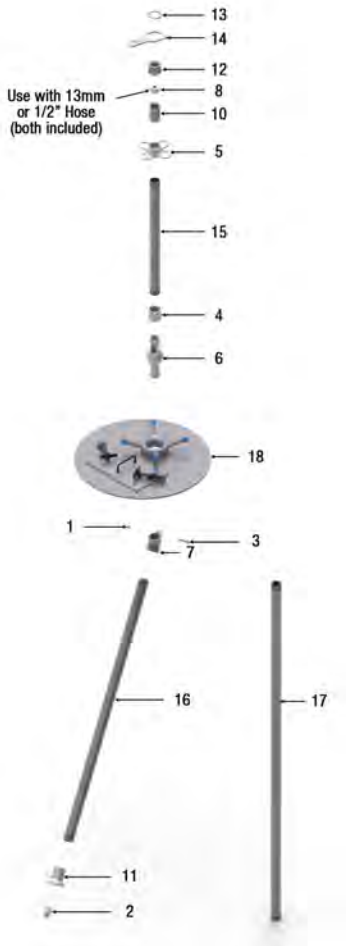

PART BREAKDOWN

ITEM	PART NO.	DESCRIPTION
1	25296	Lock Nut
2	26065	Bushing
3	27091	Capscrew
4	67908	Coupler
5	67919	Coupling, Anchor
6	67920	1" Ball Pipe
7	67921	Elbow
8	67922	Collet. 13mm
9	67923	Collet, 1/2" NPT
10	67924	Nipple
11	67925	Outlet Fitting
12	67926	Gland
13	67927	Retaining Ring
14	67928	Gland Wrench
15	67929	Tube Extension, 2'
16	67930	Tube Extension, 4'
17	67931	Tube Extension, 6'
18	67936	Base Plate Assy

SONETICS® APEX WIRELESS HEADSET

Headset
Part No. 64299 (wireless)
65911 (wireless w/Bluetooth)

Wireless Base Station
Part No. 66090

Portable Com Hub
Part No. 64298 (5/100)
65644 (10/100)

Charging Cases
Part No. 64300 (5-user)
65925 (10-user)

Sonetics APEX wireless headsets provide a communication solution for all members on your team. Operators today rely on eye-contact and hand signals to communicate when operating large, noisy machinery, including waterblasting systems.

What if you could know word-for-word what the other operator needs in an instant with NO interpretation required? Sonetics developed a headset that provides a piece-of-mind in an instant through actual voice communication, noise reduction, and noise filtration with an industry first in integrated personal sound dosimeter. Built to withstand extreme environments, Sonetics wireless systems are dust proof, watertight, and ready to perform in the same tough conditions you face every day.

FEATURES

- Secure interference-free communication with excellent range (up to 1,600 feet)
- EPA NRR of 20dB in both behind-the-head and hard-hat configurations
- Front microphones to provide situational awareness limited to no higher than 82dB
- Personal sound dosimeter measures the exposure to sound over time and adjusts headset volume to keep the operator's ears safe
- Auto-leveling microphone with automatic voice adjustments for exterior noise
- Noise suppression limits high impulse events from transmission
- Convertible headband to allow over-the-head or behind the head wear
- Customizable ruggedized colors available to aid in identification of team members
- Integration with wired or wireless two-way portable radios
- Optional bluetooth integration for communication with cell phones, MP3 players, mobile radios, and computers
- In-case charging of headsets available when not in use

Contact your Jetstream Sales Manager for more details about the system that's right for you.

TST® WORKPLACE SAFETY SOLUTIONS

TST Workplace Safety Solutions (WSS) provide protection to sensitive equipment, machinery, or people from water, water jetting, gravel spray, and ricochets! They are made with an extremely strong outer protective fabric called TECHSTEEL™, which can withstand up to 43,500 psi (3000 bar) at a stand-off distance of 5 ft (1.5 m).

WSS OPERATOR BOOTH

Inflatable body with floor to protect operator. Can be connected to protective walls and curtains. Easy to transport and store.
Part No. 66649

WSS PROTECTIVE CURTAIN

Practical curtains which can be put together to form a protective wall of desired length. Each section is approximately 5 x 8.2 ft.
Part No. 66650

WSS PROTECTIVE WALL

Protective Wall is a stand alone solution Several walls can be connected together indefinitely. The wall can be disassembled for easy transport and storage. Each section is approximately 5.5 x 7.2 ft. Comes with aluminum frame, feet, protective fabric and bottom flap.
Part No. 66651

WSS PROTECTIVE WALL CONNECTING PANEL

Connecting panels uses waterproof Keder connections to connect WSS Protective Walls, Curtains, and Booths.

PART NO.	CONNECTION TYPE
67659	Keder Betwen Walls
67660	Female Keder Between Walls and Curtains or Booths
67661	Male Keder Between Walls and Curtains or Booths

WSS SCUFFGUARD

Protect valuable hoses from wear and tear. The 6.6 ft. version is easy to mount with hooks and loops. The 16.4 ft. version is like a tube. Inner diameter is approximately 2.2 in. Eyelets are used for fastening at the ends.

PART NO.	LENGTH
66652	6.6 ft (2m)
66653	16.4 ft (5m)

SAFETY

TST® WATERJET PROTECTION

TST products provide protection to the operator without compromising on comfort or quality. Two levels of protection are offered depending on the protection needs and working pressures. See chart below for specific protection levels.

PROTECTION LEVEL*	COLOR IDENTIFIER	SINGLE JET	ROTARY JET
10/28	YELLOW	14,500 psi/1000 bar	40,600 psi/2800 bar
20/30	ORANGE	30,000 psi/2000 bar	43,500 psi/3000 bar

*Protection levels are located on all articles for quick identification.

TST ALFA KIT

Waistcoast and apron with hand protection. One size fits all.

PROTECTION LEVEL 10/28	PROTECTION LEVEL 20/30
PART NO.	PART NO.
67445	67446

TST GAMMA KIT

Trousers and jacket with integrated hand protection.

PROTECTION LEVEL 10/28			PROTECTION LEVEL 20/30		
PART NO.	VENTILATED PART NO.*	SIZE	PART NO.	VENTILATED PART NO.*	SIZE
58962	58962-V	S/M	58963	58963-V	S/M
58901	58901-V	L/XL	58964	58964-V	L/XL
58902	58902-V	2XL/3XL	58965	58965-V	2XL/3XL
59873	59873-V	4XL/5XL	59874	59874-V	4XL/5XL
59875	59875-V	6XL	59876	59876-V	6XL

*Ventilated products consist of tubing throughout the suit with holes every five inches for complete coverage. (A cooling tube will need to be purchased with this system, as well. See page H-19.)

TST® DELTA KIT

Trousers, waistcoat, and hand protection.

PROTECTION LEVEL 10/28

PART NO.	VENTILATED PART NO.*	SIZE
58956	58956-V	S/M
58957	58957-V	L/XL
58958	58958-V	2XL/3XL

PROTECTION LEVEL 20/30

PART NO.	VENTILATED PART NO.*	SIZE
58959	58959-V	S/M
58960	58960-V	L/XL
58961	58961-V	2XL/3XL

*Ventilated products consist of tubing throughout the suit with holes every five inches for complete coverage. (A cooling tube will need to be purchased with this system, as well. See page H-19.)

TST SIGMA KIT

Waistcoat & overall with integrated hand protection.

PROTECTION LEVEL 10/28

PART NO.	SIZE
58944	S
58945	M
58946	L
58947	XL
58948	2XL
58949	3XL

PROTECTION LEVEL 20/30

PART NO.	SIZE
58950	S
58951	M
58952	L
58953	XL
58954	2XL
58955	3XL

TST TROUSERS

Individual item.

PROTECTION LEVEL 10/28

PART NO.	VENTILATED PART NO.*	SIZE
58966	58966-V	S/M
58967	58967-V	L/XL
58968	58968-V	2XL/3XL

PROTECTION LEVEL 20/30

PART NO.	VENTILATED PART NO.*	SIZE
58969	58969-V	S/M
58970	58970-V	L/XL
58971	58971-V	2XL/3XL

*Ventilated products consist of tubing throughout the suit with holes every five inches for complete coverage. (A cooling tube will need to be purchased with this system, as well. See page H-19.)

TST® JACKET

Integrated hand protection. Individual item.

PROTECTION LEVEL 10/28		PROTECTION LEVEL 20/30	
PART NO.	SIZE	PART NO.	SIZE
58972	S/M	58975	S/M
58973	L/XL	58976	L/XL
58974	2XL/3XL	58977	2XL/3XL
		59492	4XL/5XL

TST WAISTCOAT

Individual item.

PROTECTION LEVEL 10/28		PROTECTION LEVEL 20/30	
PART NO.	SIZE	PART NO.	SIZE
58978	M-2XL	58980	M-2XL
58979	3XL	58981	3XL

TST OVERALL

Integrated hand protection. Individual item.

PROTECTION LEVEL 10/28		PROTECTION LEVEL 20/30	
PART NO.	SIZE	PART NO.	SIZE
58982	S	58988	S
58983	M	58989	M
58984	L	58990	L
58985	XL	58991	XL
58986	2XL	58992	2XL
58987	3XL	58993	3XL

TST® HAND PROTECTION

One size fits all. Sold in pairs.

PART NO.	PROTECTION LEVEL
67526	10/28
67527	20/30

TST APRON

One size fits all. Individual Item.

PART NO.	PROTECTION LEVEL
58903	10/28
58997	20/30

TST WAISTCOAT WITH APRON

One size fits all. Individual Item.

PART NO.	PROTECTION LEVEL
58955	10/28
58996	20/30

TST BOOTS 3000

PART NO.	SIZE APPROX. US MEN
59000	9
59001	9.5
59002	10
58932	10.5
59003	11
59004	12
59005	13

TST GAITERS

One size fits all. Pair.

PART NO.	PROTECTION LEVEL
59007	20/30

TST BALACLAVA

Comfort accessory for use under protective gear. One size fits all.

PART NO.	PROTECTION LEVEL
59006	N/A

VORTEX COOLER TUBE

(Not shown.) Personal Air Conditioner. For full body cooling, a 25cfm or 35cfm tube is recommended. If the tube is not sized for the available air supply, it will perform poorly.

PART NO.	CFM
61415	25 CFM
51416	35 CFM

TST GREASE REMOVER

PART NO.	L
59015	0.5
59016	2.5

SAFETY

TST® PRO-OPERATOR TROUSERS

Individual item. Grey or High Visibility Orange.

GREY		HIGH VISIBILITY	
PROTECTION LEVEL 5/5/2		PROTECTION LEVEL 5/5/2	
PART NO.	SIZE	PART NO.	SIZE
66694	XS	66715	XS
66695	S	66716	S
66696	M	66717	M
66697	L	66718	L
66698	XL	66719	XL
66699	XXL	66720	XXL
66700	3XL	66721	3XL

TST PRO-OPERATOR JACKET WITH HOOD

Individual item. Grey or High Visibility Orange.

GREY		HIGH VISIBILITY	
PROTECTION LEVEL 5/5/2		PROTECTION LEVEL 5/5/2	
PART NO.	SIZE	PART NO.	SIZE
66687	XS	66708	XS
66688	S	66709	S
66689	M	66710	M
66690	L	66711	L
66691	XL	66712	XL
66692	XXL	66713	XXL
66693	3XL	66714	3XL

TST PRO-OPERATOR VEST

Individual item. High Visibility Orange.

HIGH VISIBILITY	
PROTECTION LEVEL 5/5/2	
PART NO.	SIZE
66552	S
66553	M
66554	L
66555	XL
66556	XXL
66557	3XL

TST® PRO-OPERATOR OVERALL WITH HOOD

Individual item. Grey or High Visibility Orange.

GREY		HIGH VISIBILITY	
PROTECTION LEVEL 5/5/2		PROTECTION LEVEL 5/5/2	
PART NO.	SIZE	PART NO.	SIZE
66701	XS	66722	XS
66702	S	66723	S
66703	M	66724	M
66704	L	66725	L
66705	XL	66726	XL
66706	XXL	66727	XXL
66707	3XL	66728	3XL

TST HEAD PROTECTION

Helmet with visor and hearing protectors. One size fits all.

PART NO.	PROTECTION LEVEL
65498	20/30

TST HELMET

Helmet with CE marking approved to SS-EN397:2012. Adjustable. One size fits all.

PART NO.	PROTECTION LEVEL
66645	20/30

TST HEARING PROTECTION

One size fits all. Adjustable.
Part No. 66647

TST BLUETOOTH ADAPTER

Enables wireless communication while using TST Hearing Protection.
Part No. 67658

TST VISOR HOLDER

Visor holder for TST Head Protection.
Part No. 66646

TST VISORS (10 PACK)

10 pack of replaceable visors for TST Head Protection.
Part No. 67657

SAFETY

TST® CHIN STRAP

3-point chin strap for use with TST Head Protection.
Part No. 66648

TST PRO-OPERATOR GLOVES

Includes inner gloves. Pair.

PART NO.	PROTECTION LEVEL
60396	5/5/2

TURTLESKIN® WATERARMOR

Provides waterblast operators with a high level of protection from high-pressure waterjets.

- Proven protection up to 40,000 psi (2750 bar)
- Lightweight, hinged panel design provides flexibility without fatigue
- Modular design—buy only what you need
- Open back keeps operator cooler longer

ITEM(S)	PART NO.	DESCRIPTION
	TURTLESKIN MAIN PARTS	
A	27885	Safety Suit—Torso & Chaps
B	27884	Gaiters (Shins & Feet)
C	28589	Gauntlets (Hands & Forearms)
	REPAIR KITS	
-	71613	Torso
-	71614	Chaps
-	71615	Gaiters

SAFETY ACCESSORIES

SAFETY GLASSES PREMIUM

Clear/Gray anti-fog lens, adjustable nose pad, scratch resistant, UV-blocking, Z87+ approved.
Part No. J70316

SAFETY GLASSES PREMIUM

Gray/Gray anti-fog lens, adjustable nose pad, scratch resistant, UV-blocking, Z87+ approved.
Part No. J70317

SAFETY GLASSES ECONOMY

Scratch resistant, UV-blocking.
Part No. J70318

SAFETY GOGGLES

Soft frame with impact and chemical splash protection, anti-fog lens, Neoprene strap, Z87+ approved.
Part No. 25620

FACE SHIELD

Multiple Mounting Slots. Polycarbonate.
Part No. 26255

FACE SHIELD

Multiple Mounting Slots. Polycarbonate.
Part No. 26255T

FACE SHIELD

Multiple Mounting Slots with Velcro strip. Polycarbonate.
Part No. 26255V

UNIVERSAL FACE SHIELD BRACKET

Fits the brim of most hard hats. Plastic.
Part No. 25621

EAR PLUGS

Uncorded with noise reduction rating: 33. Molded Polyurethane Foam.
Part No. J70321

HARD HAT

White, six-point nylon suspension with ratchet knob. Hard Plastic.
Part No. J70315

HARD HAT

White, six-point nylon suspension with pin-lock adjustment. Hard Plastic.
Part No. 25625

EAR PLUGS

Corded with noise reduction rating: 30. Molded Polyurethane Foam.
Part No. J70322

PREMIUM 16" BOOTS

Steel toe, waterproof, meets ANSI Z41 PT99 Sect 1, 2, & 5. Size 6 to 14. Black/Yellow Rubber.
Part No. J70324-size

ECONOMY 16" BOOTS

Steel toe, waterproof. Size 7 to 13. Black Rubber.
Part No. 27168-size

12" BOOTS

Steel toe, waterproof, meets ANSI Z41 PT99 Sect 1. Size 6 to 14. Copper/Tan Neoprene.
Part No. J70326-size

SHIN & FOOT GUARDS

Padded instep and nylon straps. Aluminum.
Part No. 26894

WATER PROTECTION SUITS

Jacket, bib overall pants & face shield bib. PVC/Polyester. Sizes M-5XL
Part No. J70323-size

WATER PROTECTION SUITS

Jacket and bib overall pants. PVC/Polyester. Size M-7XL
Part No. 25617-size

GLOVES

14" PVC/NITRILE. Chemical resistant with rough finish. Fully coated with jersey lining. Size 10.
Part No. 25624

GLOVES

12" PVC Rough Finished gloves. Cotton Lining. Size 10.
Part No. J70327

SAFETY

SAFETY TAPE, SIGNS AND DECALS

HEALTH HAZARD CAUTION SIGN

8½" x 11"
Part No. 26247

RESTRICTED CAUTION SIGN

8½" x 11"
Part No. 26253

WATERBLASTING DANGER SIGN

8½" x 11"
Part No. 25614

SAFETY WARNING STICKER

Part No. 28501

SAFETY TAPE "CAUTION: WATERBLASTING IN PROGRESS"

Dimensions:
3"x 300ft
75mm x 90 m
Part No. 57998

SAFETY TAPE "DANGER: HYDRO-BLASTING"

Dimensions:
3" x 1000ft
75mm x 300 m
Part No. J70413

SAFETY WARNING DECAL SET (UNIT AND FLUID END)

Part No. 71147

SAFETY WARNING DECAL SET (FLUID END ONLY)

Part No. 71147-FE

15K COLOR CODED PRESSURE DECAL

Part No. 71742

JETSTREAM UNIT DECAL - BLUE

Part No. 29956

JETSTREAM UNIT DECAL - WHITE

Part No. 26717

SAFETY LITERATURE AND MEDIA

WJTA® INDUSTRY BEST PRACTICES FOR HIGH PRESSURE WATERJETTING EQUIPMENT

Part No. 64625

WJTA® HYDROBLASTER ORANGE BOOK

Pocket sized.
Part No. 66858

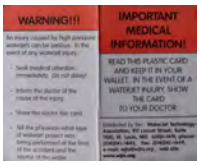

SAFETY WARNING MEDICAL CARD

Part No. 29263

TECHNICAL

UNIT CONVERSIONS & FORMULAS

MEASUREMENT	CONVERSION	EXAMPLE
LENGTH	1 in. = 25.4 mm	12 in. x 25.4 = 304.8 mm
	1 in. = .0254 m	120 in. x .0254 = 3.05 m
	1 ft. = .3048 m	12 ft. x .3048 = 3.68 m
	1 mm = .0394 in.	100 mm x .0394 = 3.94 in.
	1 m = 39.37 in.	10 m x 39.37 = 393.7 in.
	1 m = 3.281 ft.	10 m x 3.281 = 32.81 ft.
VOLUME	1 gal = 3.785 l	10 gal x 3.785 = 37.85 l
	1 liter = .2642 gal	100 liters x 26.42 = 26.42 gal
WEIGHT	1 lb. = .454 kg	10 lbs. x .454 = 4.54 kg
	1 kg = 2.205 lbs.	10 kg x 2.205 = 22.05 lbs.
PRESSURE	1 psi = .06895 bar	40,000 psi x .06895 = 2,750 bar
	1 bar = 14.503 psi	2,750 bar x 14.503 = 40,000 psi
FLOW	1 gpm = 3.785 lpm	30 gpm x 3.785 = 113.55 lpm
	1 lpm = .2642 gpm	100 lpm x .264 = 26.42 gpm
FORCE	1 lb. = 4.448 N	100 lbs. x 4.448 = 444.8 N
	1 N = .2248 lbs.	900 N x .2248 = 202.32 lbs.
TORQUE	1 lb.-ft. = 1.3567 N-m	100 lb.-ft. x 1.3567 = 135.67 N-m
	1 N-m = .737 lb.-ft.	100 N-m x .737 = 73.7 lb.-ft.
POWER	1 hp = .7457 kW	50 hp x .7457 = 37.29 kW
	1 kW = 1.341 hp	50 kW x 1.341 = 67.05 hp

FORMULA	ENGLISH UNITS	METRIC UNITS
POWER REQUIREMENTS*	hp = gpm x psi / 1550	kW = lpm x bar / 540

*Formulas assume 90% mechanical efficiency

CONNECTION TYPES

Several connection types are used at pressures of 15,000 psi (1034 bar) and below. The purpose of this section is to allow users to identify the connections needed and provide information on the features and proper use of each.

Actual Size
Reference Chart

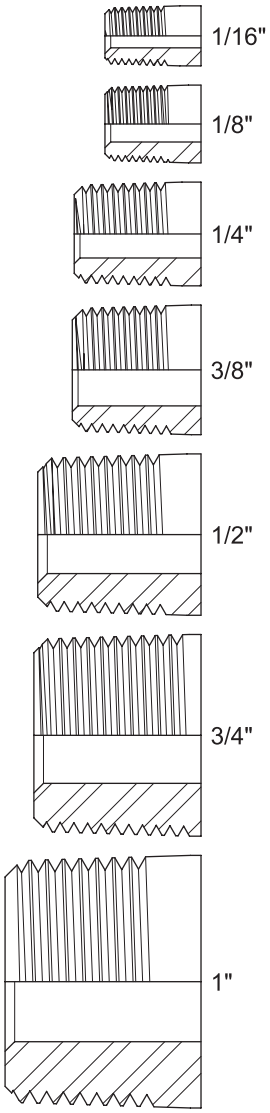

(continued on I-3)

PIPE THREADS (NPT)

- Most widely used connection type at pressures of 15,000 psi (1034 bar) and below.
- NPT threads are tapered so that, as the thread engagement between the male and female threaded components increases, the threads get closer until the connection becomes tight.

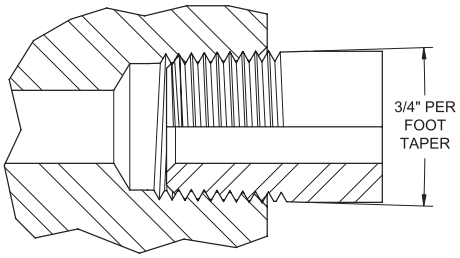

- Unlike connection types that seal using closely machined seating surfaces or soft seals (such as O-rings), pipe threads seal around the threads, with Teflon® tape or pipe joint compound applied to the threads to prevent water from escaping through the tiny gaps between the male and female threads.
- Pipe threads have a significant potential for galling — where threads seize together as threaded components are tightened. Some factors that affect the likelihood of galling are:
  - **Materials:** many stainless steels have a higher tendency to gall than
    carbon steels, and like materials are more prone to galling than two different materials.
  - **Thread quality:** a rough finish on thread surfaces increases the potential for galling.
  - **Thread profile:** some manufacturers allow sharp edges at the crest of each thread, causing interference with the thread roots of mating part (see illustration below) and significantly increasing the risk of galling.
    All pipe threads on Jetstream products are machined with flat thread crests to prevent damage to mating parts.
  - **Copper plating** is used on Jetstream stainless steel fittings with male pipe threads to prevent galling.
  - **Thread lubricants (anti-seize)** applied to the male threads before engagement greatly reduce the chance of galling. Consistent use of thread lubricant is **strongly recommended** for all connections but absolutely essential for pipe threads or stainless steel connections.
  - Jetstream pipe threads are machined to a special specification to ensure greater thread engagement for increased safety and to reduce the risk of galling.

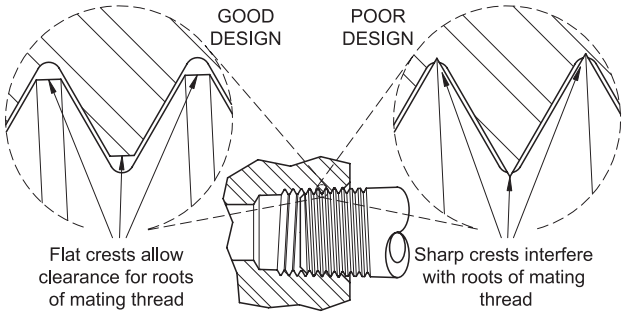

TECHNICAL

CONNECTION TYPES

PIPE THREAD CONNECTION INSTRUCTIONS

1. Wrap Teflon® tape three or four times around the male threads in a clockwise direction (if looking at the face of the threaded end of the part).

2. Brush on nickel- or silver-based thread lubricant (anti-seize) over the Teflon.

3. Install male threaded component into female threaded component and hand tighten.

4. Wrench tighten 1/2 to 2 turns past hand tight.

Actual Size
Reference Chart (continued)

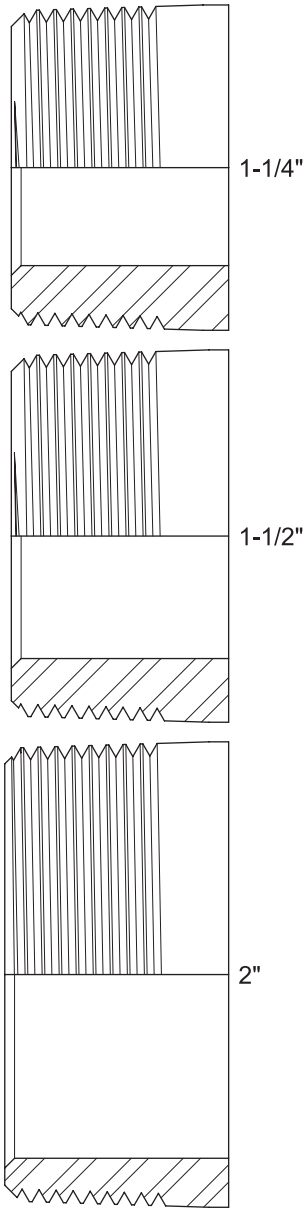

TECHNICAL

CONNECTION TYPES

JETSTREAM HF MALE ADAPTERS

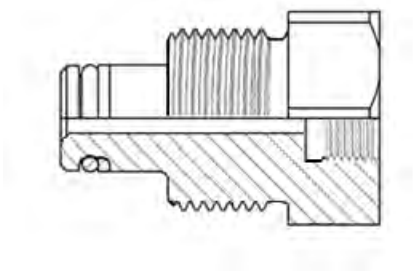

For use with 5015Q and 6015 pumps, the Jetstream HF connection features an easily replaceable seal to prevent wear or damage to the manifold and a large bore to minimize pressure drop through fittings.

- Copper plated for galling resistance
- Stainless steel

Actual Size
Reference Chart

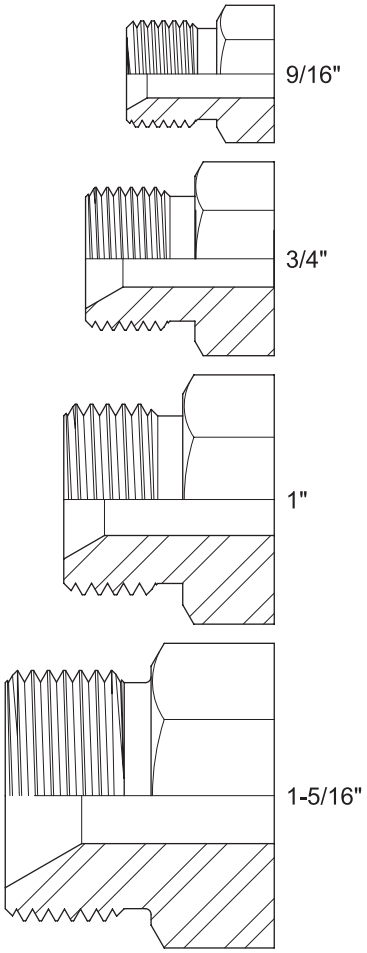

TYPE M

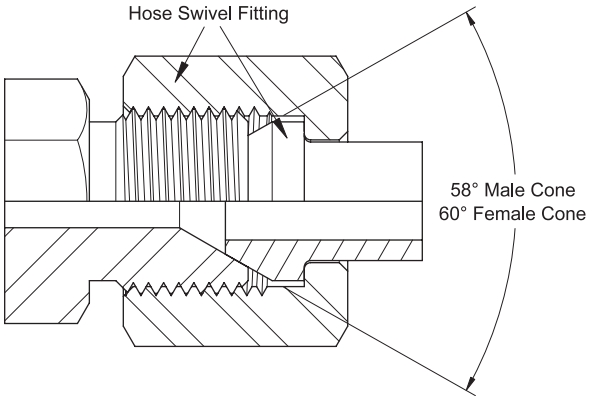

- Industry standard connection
- Designed for fast, simple connection of waterblast hoses and lances to waterblast equipment
- Male conical seat protected from damage by the hose swivel nut
- Unlike medium pressure connections, the seating surfaces do not rotate against each other when connections are made, resulting in a more reliable, longer lasting connection
- Verify pressure rating of Type M hoses and fittings before use as the connection type is used for a wide range of pressures due to its ease of use and reliability

SIZE	CONNECTION THREAD	RECOMMENDED TORQUE	
		FT-LB	N-M
9/16" Type M	9/16" – 18UNF	30	41
3/4" Type M	3/4" – 16UNF	45	61
1" Type M	1" – 12UNF	70	95
1-5/16" Type M	1-5/16" – 12UN	110	149

Note: Always apply thread lubricant (anti-seize) to male threads before assembling waterblast connections. See Section E for thread lubricants available from Jetstream.

TECHNICAL

CONNECTION TYPES

METRIC

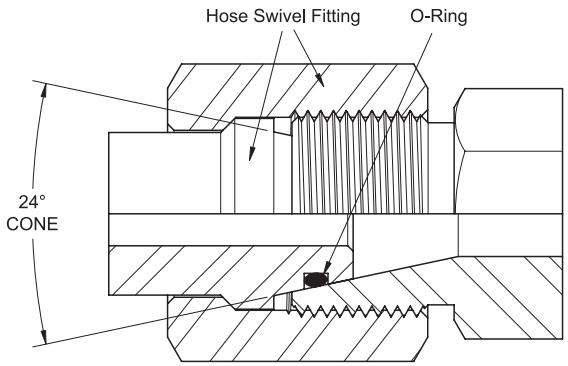

- Internationally used connection
- Designed for fast, simple connection of waterblast hoses and lances to waterblast equipment
- Male conical seat protected from damage by the hose swivel nut

CONNECTION SIZES
M22 x 1.5
M24 x 1.5
M36 x 2.0
M43 x 2.0

Note: Always apply thread lubricant (anti-seize) to male threads before assembling waterblast connections. See Section E for thread lubricants available from Jetstream.

Actual Size
Reference Chart

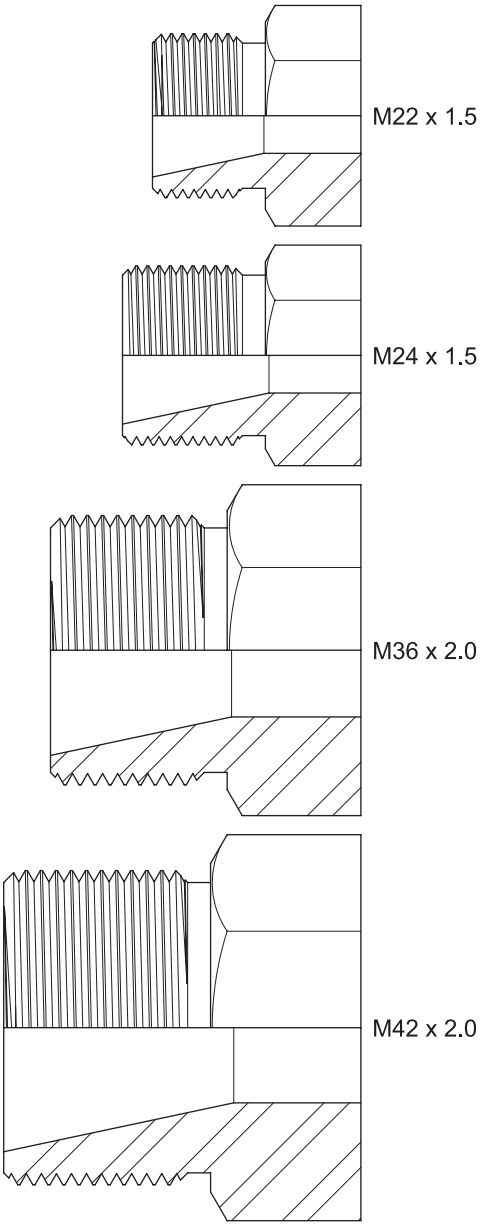

TECHNICAL

CONNECTION TYPES

BRITISH STANDARD PIPE (BSPP)

Actual Size
Reference Chart

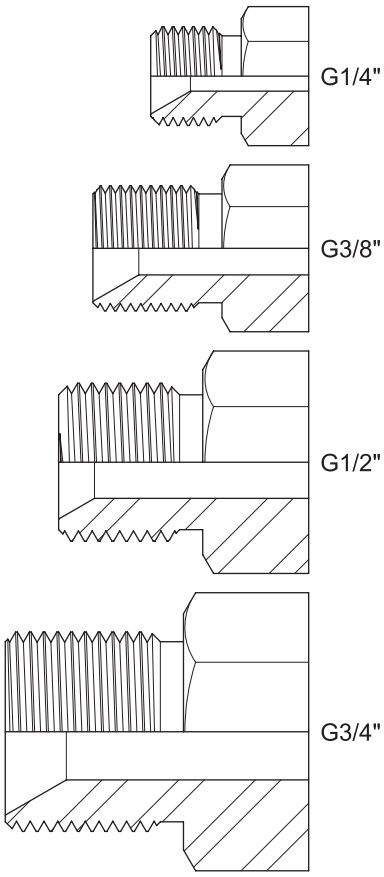

- Industry standard connection most common in Europe
- Designed for fast, simple connection of waterblast hoses and lances to waterblast equipment
- Male conical seat protected from damage by the hose swivel nut
- Products with BSPP connections featured in this catalog are straight thread connection using a metal-to-metal conical seat as the sealing method. BSPP is also available as a tapered thread similar in function to NPT pipe threads, but this variation is not found on products in this catalog.

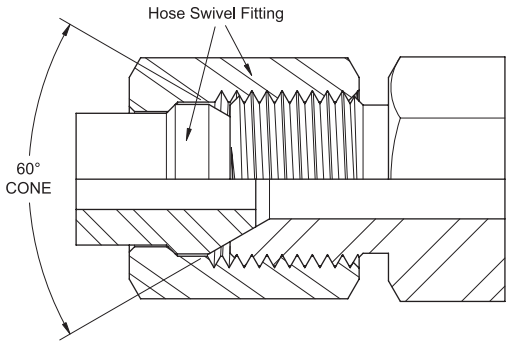

SIZE	CONNECTION TYPES
G1/4	1/4"-19BSPP
G3/8"	3/8"-19BSPP
G1/2"	1/2"-14BSPP
G3/4"	3/4"-14BSPP

Note: Always apply thread lubricant (anti-seize) to male threads before assembling waterblast connections. See Section E for thread lubricants available from Jetstream.

STRAIGHT BOSS

Actual Size
Reference Chart

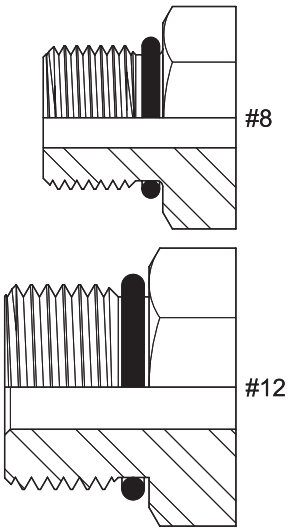

- Hydraulic connection adapted for waterblast use with American Aero pumps
- Sealing accomplished by O-ring behind male threads
- Used at 10,000 psi 689 bar) or below

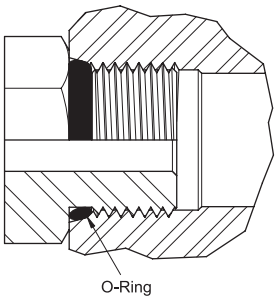

SIZE	CONNECTION THREAD
#8	3/4"-16UNF
#12	1-1/16"-12UN

Note: Always apply thread lubricant (anti-seize) to male threads before assembling waterblast connections. See Section E for thread lubricants available from Jetstream.

CONNECTION TYPES

MEDIUM PRESSURE (MP)

3-Piece Male Connection (Standard)

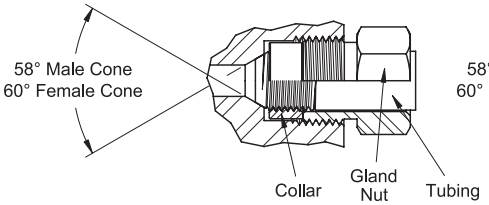

Single-Piece Male Connection

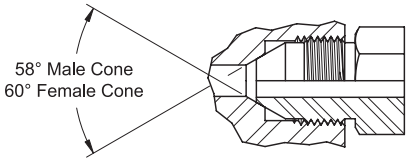

- Industry standard connection for 20,000 psi (1379 bar) applications, medium pressure is occasionally used in applications at 15,000 psi (1034 bar) and below.
- Connections exist in two different forms:
  1. Used to connect medium pressure tubing with a conical male seat and left-handed threads to a female port using a gland nut and left-hand threaded collar (Gland, Collar & Tubing).
  2. For many medium pressure male fittings, the geometry of the gland, collar, and tubing is combined into one component that connects directly to a medium pressure female port (Single Piece Style).
- With proper care, this connection is suitable for repetitive connection/disconnection.
- Damage from repeated or improper use can often be repaired using reconing tools. For details on tubing preparation and repair equipment, contact Jetstream Sales.

SIZE	CONNECTION THREAD	TUBING THREAD* LEFT-HAND	RECOMMENDED TORQUE	
			ft-lb	N-m
1/4" MP	7/16"-20UNF	1/4"-28UNF	20	27
3/8" MP	9/16"-18UNF	3/8"-24UNF	30	41
9/16" MP	13/16"-16UNF	9/16"-18UNF	50	68
3/4" MP	3/4"-14NPSM	3/4"-16UNF	90	122
1" MP	1-3/8"-12UNF	1"-14UNF	125	170

* For three-piece connection styles only

CONNECTION INSTRUCTIONS

1. **3-piece Male Connection Style only** — Liberally apply anti-seize to male tubing threads to prevent thread galling.
2. **3-piece Male Connection Style only** — Slide gland nut over tubing and thread collar (left-hand threaded) onto tubing until it is past the first one or two full threads of the tubing.
3. **Both Styles** — Liberally apply anti-seize to male connection threads and male cone.
4. **Both Styles** — Install male connection into female port and tighten according to torque specification in chart above.

Note: Always apply thread lubricant (anti-seize) to male threads before assembling waterblast connections. See Section E for thread lubricants available from Jetstream.

Actual Size
Reference Chart

Single Piece Style

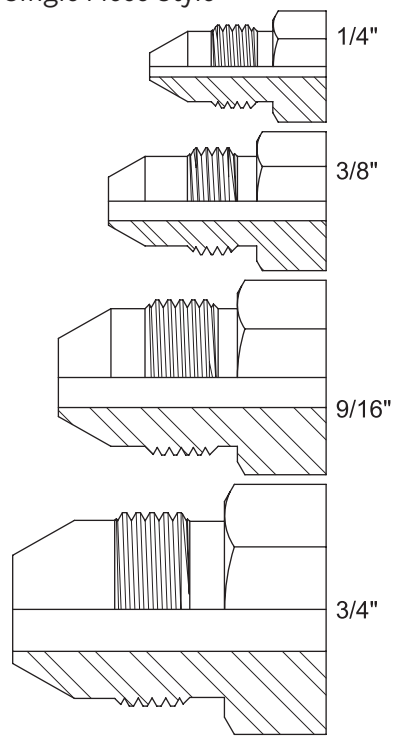

Gland, Collar & Tubing

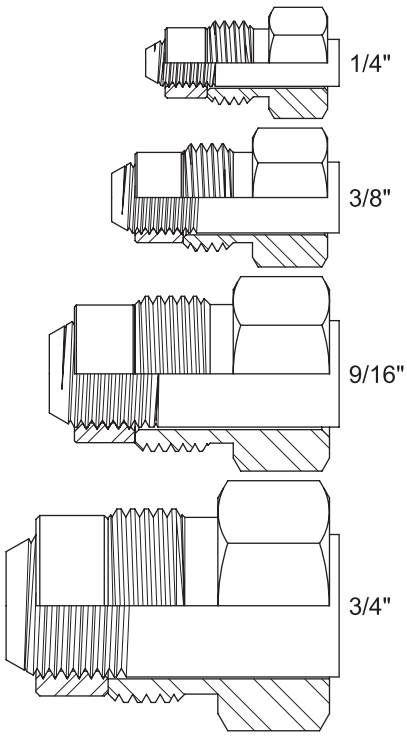

1" MP not shown

TECHNICAL

INDEX

PART NUMBERS

00111 ..... E-11
01437 ..... E-10
04101 ..... B-7, B-12, B-15, B-19
04210 ..... F-5
08130 ..... B-7
08282 ..... C-21, C-24
25036 ..... B-29, B-31
25037 ..... C-31, C-32 25059 B-37, B-47, B-49, B-53
25060 ..... B-37, 25120 B-12, B-29, B-31, E-8
25125 ..... C-23
25132 ..... B-22
25165 ..... B-55, C-23, C-24
25174 ..... C-29, E-8
25193 ..... F-3, F-4, F-5, F-6, F-7
25206 ..... C-7, C-10, C-13
25212 ..... C-23
25215 ..... E-8
25220 ..... B-77, B-79
25221 ..... C-36
25228 ..... G-89
25229 ..... G-28
25238 ..... E-15
25247 ..... C-26, C-31
25249 ..... C-31, H-8
25251 ..... B-22, C-31, H-8
25255 ..... B-37, B-47, B-49, B-53
25261 ..... F-11, F-12
25264 ..... B-9
25279 ..... C-25
25296 ..... F-3, F-4, F-9, G-35, H-13
25314 ..... C-26, C-31
25395 ..... E-8, G-60, G-89
25427 ..... B-95
25428 ..... B-22
25452 ..... E-7
25454 ..... E-7
25455 ..... E-7
25501 ..... G-79
25508 ..... B-22
25513 ..... D-2, D-3, D-17
25513-0250505 D-2
25513-0500505 D-2
25536 ..... B-22
25541 ..... B-22
25566 ..... B-25, B-27, B-69
25568 ..... D-9, D-10, D-20
25568-25 ..... D-9
25568-50 ..... D-9
25570 ..... D-9, D-10, D-20
25570-25 ..... D-9
25570-50 ..... D-9
25571 ..... D-9, D-10, D-20
25571-25 ..... D-9
25571-50 ..... D-9
25576 ..... D-2, D-3, D-17
25576-0250404 D-2
25576-0500404 D-2
25593 ..... C-17, C-19, C-27, C-29
25603 ..... C-17, C-27, C-29
25607 ..... B-47, B-49, B-51, B-53, B-65, B-67
25610 ..... B-9
25614 ..... H-24
25617 ..... H-23
25620 ..... H-23
25621 ..... H-23
25624 ..... H-23
25625 ..... H-23
25638 ..... C-24
25644 ..... C-9, C-15
25657 ..... C-19
25690 ..... E-3
25700 ..... C-17, C-19, C-27, C-29
25702 ..... E-9
25703 ..... E-9
25706 ..... B-45, B-83
25740 ..... C-23
25749 ..... G-79
25771 ..... B-29, C-19, C-37
25782 ..... G-33, G-35
25796 ..... C-7, C-19
25807 ..... C-19
25864 ..... B-61, B-63
25866 ..... C-35
25901 ..... E-6
25902 ..... E-6
25903 ..... E-6
25904 ..... E-6, G-62
25914 ..... D-2, D-3, D-17
25914-0250303 D-2
25914-0500303 D-2
25928 ..... B-12, B-15, B-19, B-22
25932 ..... C-19
25946 ..... B-12, B-15, B-19, B-22, B-35, B-37, B-39, B-45, B-47, B-49, B-51, B-53, B-55, B-57, B-61, B-63, B-65, B-67, B-69, B-73, B-77, B-79, B-83, B-87, B-89, B-91, B-95
26051 ..... B-7, B-12, B-15, B-19
26055 ..... E-5
26056 ..... E-5
26057 ..... E-5
26059 ..... E-5
26061 ..... E-5, F-3, F-4, F-5, F-6, F-7, F-9, F-10
26062 ..... E-6, F-5, F-6, F-7, F-10
26063 ..... E-6
26064 ..... E-5
26065 ..... C-19, E-6, H-13
26067 ..... E-5
26069 ..... C-25, E-6, G-61
26072 ..... E-5
26073 ..... E-6
26074 ..... E-6
26075 ..... E-7
26077 ..... E-8
26084 ..... E-7
26104 ..... D-5, D-6, D-7, D-8, D-19, H-6
26104-0250101 ... D-5
26104-0350101 ... D-5
26104-0500101 ... D-5
26106 ..... D-5, D-6, D-7, D-8, D-19, H-6
26106-0250202 D-5
26106-0350202 D-5
26106-0500202 D-5
26108 ..... D-1, D-5, D-6, D-7, D-8, D-18, H-6
26108-0250303 D-5
26108-0350303 D-5
26108-0500303 D-5
26115 ..... B-27, C-17, C-19, E-8
26124 ..... E-6
26126 ..... C-7, C-9, C-10, C-11,

C-13, C-15
26146 ..... E-8
26147 ..... C-21, E-8
26148 ..... B-25, E-8
26149 ..... E-8
26151 ..... E-7
26152 ..... E-7
26153 ..... E-7
26154 ..... E-7
26155 ..... E-7
26156 ..... E-7
26157 ..... E-6
26158 ..... E-6
26162 ..... E-4
26164 ..... C-27, E-8
26166 ..... E-4
26170 ..... E-8
26171 ..... E-4
26173 ..... E-4
26195 ..... B-15, B-19
26208 ..... B-12, B-15, B-19
26212 ..... B-51, B-53, B-55
26220 ..... B-47, B-73
26247 ..... H-24
26253 ..... H-24
26255 ..... H-23
26255T H-23
26255V H-23
26259 ..... B-7, B-12, B-15, B-19
26259-1 ..... B-7, B-12, B-15, B-19
26259-2 ..... B-7, B-12, B-15, B-19
26259-3 ..... B-7, B-12, B-15, B-19
26314 ..... E-5
26360 ..... B-7, B-12, B-15, B-19, B-22
26361 ..... B-12, B-15, B-19
26364 ..... C-7
26369 ..... B-15, B-19
26376 ..... B-7, B-12, B-15, B-19
26379 ..... B-7, B-12, B-15, B-19, B-25, B-27, B-29, B-31
26387 ..... B-29, B-31, B-33, B-35, B-37, B-47, B-49, B-51, B-53, B-65, B-67, B-69
26390 ..... B-7, B-12, B-15, B-19
26416 ..... B-39, B-61, B-63, B-73, B-77, B-79, B-83, B-87, B-89, B-91, B-95, C-23
26426 ..... C-25
26435 ..... B-7, B-12, B-15, B-19, B-22
26453 ..... F-11, F-12
26455 ..... C-34
26462 ..... B-22, B-39, B-45, B-61, B-63, B-73, B-77, B-79, B-83, B-87, B-89, B-91, B-95
26465 ..... B-25, B-45, B-47, B-49, B-51, B-53, B-55, B-57, B-61, B-63, B-65, B-67, B-69, B-83, B-87, B-89, B-91, B-95
26468 ..... B-12, B-15, B-19, B-22, B-31, B-33, B-35, B-37, B-39, B-45, B-47, B-49, B-51, B-53, B-55, B-57, B-61, B-63, B-65, B-67, B-69, B-73, B-77, B-79, B-83, B-87, B-89, B-91, B-95, C-26
26469 ..... B-55, B-57, B-61, B-69, B-79
26470 ..... B-39, B-45, B-61, B-63, B-73, B-77, B-79, B-83, B-87, B-89, B-91, B-95
26472 ..... B-39, B-45, B-61, B-63, B-73, B-77, B-79, B-83, B-87, B-89, B-91, B-95
26473 ..... B-45, B-83
26474 ..... B-39, B-45, B-73, B-77, B-79, B-83, B-87, B-89, B-91, B-95
26476 ..... B-39, B-45, B-61, B-63, B-73, B-77, B-79, B-83, B-87, B-89, B-91, B-95
26478 ..... B-22
26479 ..... B-7, B-12, B-15, B-19
26481 ..... B-7, B-12, B-15, B-19
26482 ..... B-7, B-12, B-15, B-19
26483 ..... B-22
26484 ..... B-15, B-19, B-22
26486 ..... B-22
26487 ..... B-7, B-12, B-15, B-19, B-29, B-31, B-35, B-37, B-47, B-49, B-51, B-53, B-55, B-65, B-67, B-69
26491 ..... B-15, B-19
26492 ..... B-22
26494 ..... B-49
26495 ..... B-22
26495-1 ..... B-22
26495-2 ..... B-22
26495-3 ..... B-22
26496 ..... B-22
26500 ..... B-7, B-12, B-15, B-19, B-29, B-31, B-33, B-35, B-37, B-65, B-67
26509 ..... C-17, C-27, C-29
26522 ..... C-17
26523 ..... E-16
26534 ..... G-89
26543 ..... B-77, B-79
26544 ..... B-77, B-79, B-87, B-89, B-91
26556 ..... C-21
26558 ..... B-12, B-15, B-19, B-22, B-7
26562 ..... H-8
26565 ..... C-31
26589 ..... B-25, B-27, B-29, B-31
26590 ..... B-15, B-19
26623 ..... B-22, B-39, B-61, B-73, B-77, B-79
26635 ..... C-33, E-20, E-21, G-36
26645 ..... C-33, E-20, G-36
26669 ..... B-65, B-67
26682 ..... C-26
26688 ..... C-26
26689 ..... B-33, C-10, C-11, C-26, F-3, F-4, F-5, F-6, F-7, F-9, F-10
26690 ..... C-26
26705 ..... B-7, B-12, B-15, B-19, B-22
26707 ..... C-31
26709 ..... B-9
26711 ..... C-9, C-15
26717 ..... H-24
26728 ..... C-26
26732 ..... B-57
26733 ..... B-57
26734 ..... B-57
26735 ..... B-57
26737 ..... B-57
26759 ..... G-20, G-24
26762 ..... G-2
26765 ..... C-35
26766 ..... C-35
26782 ..... C-17, C-27, C-29
26789 ..... B-9
26798 ..... B-7, B-12, B-15, B-19, B-22, C-31
26802 ..... B-47, B-49, B-51, B-53, B-65, B-67
26834 ..... H-8
26836 ..... B-57

26869 ..... G-20
26871 ..... G-24, G-33
26874 ..... B-55, B-57, B-61, B-69, B-79
26876 ..... B-33
26894 ..... H-23
26916 ..... C-35
26919 ..... C-19
26920 ..... G-89
26930 ..... B-33, B-35, B-51, B-65
26993 ..... C-5
27009 ..... E-18
27030 ..... G-89
27038 ..... G-28
27040 ..... G-28
27042 ..... G-28
27043 ..... G-28
27044 ..... G-28
27046 ..... G-28
27048 ..... G-28
27049 ..... G-28
27072 ..... G-20
27091 ..... H-13
27101 ..... B-12, B-15, B-19, B-22, B-35, B-37, B-39, B-45, B-47, B-49, B-51, B-53, B-55, B-57, B-61, B-63, B-65, B-67, B-69, B-73, B-77, B-79, B-83, B-87, B-89, B-91, B-95
27107 ..... C-7, C-13
27114 ..... B-29, B-31
27118 ..... B-29, B-31, B-33, B-35, B-51, B-55, B-65, B-67, B-69
27119 ..... B-29, B-31, B-33, B-35, B-51, B-55, B-65, B-67, B-69
27122 ..... C-31
27126 ..... H-8
27168 ..... H-23
27181 ..... E-5
27204 ..... G-28
27250 ..... B-9
27251 ..... C-7, C-13
27301 ..... G-90
27347 ..... C-9, C-15
27348 ..... C-9, C-15
27349 ..... C-9
27350 ..... C-17
27380 ..... C-9, C-15
27449 ..... B-9, H-8
27475 ..... B-25, B-45, B-47, B-49, B-51, B-53, B-55, B-57, B-61, B-63, B-65, B-67, B-69, B-77, B-79, B-83, B-87, B-89, B-91, B-95
27492 ..... G-32, G-33
27497 ..... C-35
27527 ..... E-13
27539 ..... B-29, B-31
27550 ..... B-55, B-69
27551 ..... B-55, B-69
27560 ..... D-5, D-6, D-7, D-8, D-18, H-6
27560-0250404 D-5
27560-0350404 D-5
27560-0500404 D-5
27592 ..... B-15, B-19
27631 ..... C-9, C-15
27680 ..... C-23, C-25
27688 ..... C-35
27698 ..... B-9, C-36
27714 ..... B-9
27716 ..... C-25
27721 ..... E-1, E-2
27722 ..... G-25, H-10
27729 ..... B-57, B-69
27732 ..... B-25, B-27, B-29, B-31, B-33, B-35, B-37, B-39, B-45, B-47, B-49, B-51, B-53, B-63, B-65, B-67, B-73, B-77, B-83, B-87, B-89, B-91, B-95
27740 ..... B-25, B-27, B-33, B-35, B-37, B-39, B-45, B-47, B-49, B-51, B-53, B-63, B-65, B-67, B-73, B-77, B-83, B-87, B-89, B-91, B-95, C-9, C-15
27757 ..... C-7, C-10
27779 ..... B-25, B-27
27783 ..... C-9
27876 ..... B-9
27884 ..... H-22
27885 ..... H-22
27947 ..... C-19
27960 ..... E-20
27964 ..... E-18
27966 ..... E-18
27968 ..... E-20
27968-03 ..... C-31
27968-04 ..... C-31
27968-11 ..... C-31
27969 ..... C-31, C-32, E-17
27971 ..... C-31, E-10
27973 ..... C-31, E-20
27989 ..... C-19
27997 ..... E-18
28003 ..... E-11
28025 ..... C-31
28062 ..... B-15, B-19, B-22
28092 ..... E-11
28180 ..... E-20, E-21
28181 ..... E-20
28184 ..... C-31, E-18
28185 ..... E-18
28186 ..... E-19
28187 ..... E-18
28188 ..... E-18
28189 ..... E-18
28190 ..... E-19
28191 ..... E-19
28192 ..... E-14
28193 ..... E-14
28196 ..... E-13
28197 ..... E-1
28223 ..... C-9, C-15
28229 ..... E-20
28261 ..... E-10
28268 ..... E-21
28274 ..... C-26
28299 ..... E-14
28301 ..... E-17
28314 ..... E-21
28315 ..... E-21
28319 ..... E-5
28328 ..... E-14
28330 ..... E-14
28334 ..... E-11
28335 ..... E-10, G-30
28341 ..... E-18
28349 ..... E-21
28350 ..... E-14
28364 ..... C-9, C-15
28367 ..... C-9, C-15
28382 ..... E-18
28383 ..... E-20, G-25, H-9
28384 ..... E-20, E-21, G-25, H-9
28386 ..... E-11, G-2
28433 ..... E-14, G-30
28435 ..... G-2
28462 ..... E-19
28480MOD C-35
28481 ..... D-6, D-7, D-8, D-18
28487 ..... E-13
28490 ..... D-4, D-6, D-7, D-8, D-18
28490-0250303 D-4
28490-0500303 D-4
28501 ..... H-24

28519 ..... C-35
28523 ..... E-11
28524 ..... D-4, D-6, D-7, D-8, D-18
28524-0250505 D-4
28524-0251212 . D-4
28524-0500505 D-4
28524-0501212 . D-4
28577 ..... E-3
28589 ..... H-22
28596 ..... D-6, D-7, D-8, D-19, H-6
28602 ..... E-8
28610 ..... E-10
28611 ..... C-21, E-6
28616 ..... B-89
28629 ..... E-14
28631 ..... E-14
28666 ..... E-21
28667 ..... E-21
28668 ..... E-21
28673 ..... D-4, D-5, D-6, D-7, D-8, D-18
28673-0250404 D-4, D-5
28673-0350404 D-5
28673-0500404 D-4, D-5
28700 ..... E-21
28702 ..... E-10
28726 ..... E-19
28731 ..... E-20
28732 ..... E-20, E-21
28779 ..... B-63
28786 ..... E-14
28797 ..... E-19
28804 ..... E-14
28806 ..... C-35
28822 ..... E-6
28826 ..... B-15
28844 ..... E-3
28844F E-3
28844M E-3
28844S E-3
28852 ..... B-27, E-10
28860 ..... H-3
28860-10 ..... H-3
28875 ..... E-8
28875-04 ..... G-61
28894 ..... E-5
28903 ..... E-11, G-25, H-10
28921 ..... E-3
28921F E-3
28921M E-3
28921S E-3
29000 ..... E-10
29010 ..... E-11
29013 ..... E-20
29019 ..... E-13
29054 ..... E-6
29055 ..... E-7
29058 ..... E-13
29059 ..... E-13
29060 ..... E-13
29061 ..... E-13
29062 ..... E-13
29063 ..... E-14
29064 ..... E-14
29065 ..... E-14
29066 ..... E-14
29067 ..... E-17
29068 ..... E-17
29069 ..... E-17
29070 ..... E-18
29071 ..... E-18
29072 ..... E-18
29073 ..... E-18
29074 ..... E-18
29075 ..... E-18
29076 ..... E-18
29077 ..... E-18
29078 ..... E-18
29079 ..... E-18
29080 ..... E-18
29081 ..... E-19
29082 ..... E-19
29083 ..... E-19
29084 ..... E-19
29085 ..... E-19
29086 ..... E-19
29087 ..... E-19
29088 ..... E-19
29089 ..... E-19
29090 ..... E-19
29091 ..... E-19
29092 ..... E-19
29093 ..... E-19
29094 ..... E-19
29095 ..... E-19
29096 ..... E-19
29097 ..... E-19
29098 ..... E-20
29099 ..... E-20, E-21
29100 ..... E-20
29101 ..... E-20
29102 ..... E-20
29103 ..... E-21
29104 ..... E-21
29105 ..... E-21
29106 ..... E-21
29108 ..... E-20
29108-08 ..... G-25, H-9
29109 ..... E-20
29110 ..... E-20
29111 ..... E-21
29112 ..... E-21
29113 ..... E-21
29114 ..... E-21
29115 ..... E-21
29119 ..... E-19
29155 ..... C-9
29158 ..... C-9, C-15
29178 ..... E-10
29182 ..... E-11
29183 ..... E-10
29184 ..... E-11
29185 ..... E-10
29186 ..... E-11
29253 ..... E-10
29263 ..... H-24
29279 ..... E-11
29313 ..... D-4, D-6, D-7, D-8, D-18
29313-0250606 D-4
29313-0251313 ... D-4
29313-0500606 D-4
29313-0501313 ... D-4
29316 ..... E-10
29319S E-5
29327 ..... E-10
29342 ..... E-10
29374 ..... C-36
29392 ..... E-11
29427 ..... B-33
29461 ..... B-25, B-27
29485 ..... E-5
29485S E-5
29486 ..... E-5
29486S E-5
29532 ..... E-3
29534 ..... E-11, G-20
29623 ..... B-7, B-33
29630 ..... B-33
29669 ..... E-10
29673 ..... E-11
29678 ..... E-9
29715 ..... E-19
29722 ..... C-23
29738 ..... B-15, B-19, B-22
29748 ..... B-87, B-91
29799 ..... C-9, C-15
29818 ..... C-37
29828 ..... E-6
29829 ..... B-7, B-12
29831 ..... B-9
29847 ..... B-9
29848 ..... B-9
29851 ..... B-9
29889 ..... B-33
29891 ..... B-33
29904 ..... C-21, C-31
29906 ..... B-9
29956 ..... H-24

40282 ..... E-1
50034 ..... B-39, B-45, B-61, B-63, B-73, B-77, B-79, B-83, B-87, B-89, B-91, B-95
50059 ..... E-5
50064 ..... B-39, B-45, B-61, B-63, B-77, B-79, B-83, B-87, B-89, B-91, B-95, B-73
50115 ..... B-49
50127 ..... F-3, F-4, F-5, F-6, F-9, F-10
50135 ..... H-4
50138 ..... H-4
50234 ..... C-16, C-17, C-27, C-29
50293 ..... B-65, B-67
50295 ..... B-12, B-15, B-19, B-31, B-33, B-35, B-37, B-47, B-49, B-51, B-53, B-55, B-65, B-67, B-69
50296 ..... E-4
50297 ..... B-37, B-47, B-49, B-67
50298 ..... E-4
50299 ..... B-37, B-47, B-49, B-67
50300 ..... C-29, E-4
50302 ..... E-4
50303 ..... B-37, B-47, B-49, B-53
50336 ..... E-4
50342 ..... E-5, F-5, F-6
50354 ..... E-4
50365 ..... B-37, B-47, B-49, B-53
50370 ..... B-37, B-47, B-49, B-53
50378 ..... B-57
50385 ..... E-4
50392 ..... E-5
50460 ..... C-7, F-11
50468 ..... G-87
50488 ..... B-25, B-27, C-29, E-7
50496 ..... C-29
50511 ..... F-7
50512 ..... G-59
50518 ..... G-79
50541 ..... G-79
50554 ..... G-77
50559 ..... D-9, D-10, D-20
50559-25 ..... D-9
50559-50 ..... D-9
50562 ..... C-19
50585 ..... E-9
50592 ..... D-13, D-22
50594 ..... D-13, D-22
50596 ..... D-13, D-22
50620 ..... G-77
50624 ..... G-77
50638 ..... E-5
50639 ..... G-77
50640 ..... G-77
50658 ..... B-33, B-35, B-37, B-47, B-49, B-51, B-53, B-65, B-67, B-69
50659 ..... B-31, B-35, B-37, B-47, B-49, B-51, B-53, B-65, B-67, B-69
50660 ..... B-29, B-31, B-33, B-35, B-37, B-47, B-49, B-51, B-53, B-65, B-67, B-69
50661 ..... B-29, B-31, B-33, B-35, B-37, B-47, B-49, B-51, B-53, B-65, B-67, B-69
50662 ..... B-29, B-31, B-33, B-35, B-37, B-51, B-53, B-65, B-67, B-69
50673 ..... D-9, D-10, D-20
50673-25 ..... D-9
50673-50 ..... D-9
50752 ..... D-9, D-10, D-20
50752-25 ..... D-9
50752-50 ..... D-9
50795 ..... C-17, C-19, C-27, C-29
50807 ..... B-22
50811 ..... C-27, C-29
50816 ..... E-5
50824 ..... E-4
50851 ..... G-77
50852 ..... E-5
50887 ..... B-95
50889 ..... B-25, B-27, B-31, B-33, B-35, B-37, B-47, B-49, B-51, B-53, B-55, B-57, B-65, B-67, B-69, B-29
50896 ..... B-35, B-37, B-65, B-67
50897 ..... B-95
50900 ..... C-27
50902 ..... C-6, C-7, F-2, F-3, F-4, F-5, F-6, F-7, F-11
50933 ..... E-5
50989 ..... C-31, E-3
50989S E-3
50990 ..... E-3
50999 ..... E-9
51001 ..... E-4
51015 ..... D-12, D-24
51015-XX D-12
51016 ..... B-79, B-95
51020 ..... D-12, D-24
51020-XX D-12
51024 ..... H-6
51033 ..... C-38
51035 ..... B-25, B-29, B-31, C-38
51036 ..... H-6, H-7
51037 ..... C-38
51038 ..... H-6, H-7
51039 ..... E-9
51040 ..... C-38
51041 ..... E-9
51043 ..... E-9
51044 ..... H-6, H-7
51047 ..... C-38
51048 ..... C-38
51049 ..... C-38
51050 ..... C-38
51051 ..... C-38
51052 ..... B-25, C-38
51053 ..... B-25
51055 ..... H-6
51059 ..... D-14, D-23
51060 ..... G-87
51061 ..... D-14, D-22
51062 ..... D-14, D-23
51066 ..... D-13, D-22
51067 ..... D-13, D-22
51068 ..... D-13
51069 ..... D-13, D-21
51081 ..... D-13, D-22
51082 ..... D-13, D-21
51094 ..... G-61
51096 ..... G-62
51098 ..... E-8, F-6
51098-36 ..... F-6
51098-48 ..... F-5, F-7, F-10
51106 ..... E-8
51113 ..... G-87
51114 ..... G-86
51115 ..... G-86
51116 ..... G-86
51117 ..... G-86
51118 ..... D-2, D-3, D-17
51118-0250606 ..... D-2
51118-0500606 ..... D-2
51119 ..... G-82
51121 ..... G-82

51123 ..... G-82
51125 ..... G-82
51126 ..... B-25, C-17, C-19, B-27, C-29, C-37
51156 ..... G-61
51162 ..... D-9, D-10, D-20
51162-25 ..... D-9
51162-50 ..... D-9
51169 ..... G-62
51191 ..... E-5
51279 ..... B-15, B-19
51285 ..... B-41, B-64
51287 ..... B-49
51288 ..... B-49
51334 ..... E-2
51397 ..... E-8
51401 ..... E-9
51402 ..... E-2
51405 ..... E-2
51408 ..... E-2
51416 ..... H-19
51421 ..... B-15, B-19
51425 ..... H-6
51427 ..... H-6
51441 ..... C-28
51452 ..... C-28
51460A C-28
51460B C-28
51468 ..... C-28
51470A C-28
51470B C-28
51470C C-28
51477 ..... C-28
51486 ..... C-28
51487 ..... B-15, B-19
51490 ..... B-95
51498 ..... D-9, D-11, D-20
51498-25 ..... D-9
51498-50 ..... D-9
51500 ..... C-28
51534 ..... B-7, B-12, B-15, B-19
51536 ..... B-12, B-15, B-19
51538 ..... B-12, B-15, B-19
51550 ..... E-2
51552 ..... E-2
51554 ..... E-2
51556 ..... B-49
51611 ..... B-39, B-45, B-63, B-73, B-83, B-95
51617 ..... B-39, B-45, B-63, B-83, B-95
51619 ..... B-39, B-45, B-63, B-73, B-83, B-95
51621 ..... B-39, B-45, B-61, B-63, B-83, B-95
51623 ..... B-39, B-45, B-63, B-73, B-83, B-95
51624 ..... E-2
51628 ..... E-2
51638 ..... C-7, C-10, F-11
51645 ..... C-34
51647 ..... B-33, B-35, B-37, B-47, B-49, B-51, B-53, B-65, B-67, B-69
51651 ..... B-31, B-35, B-37, B-47, B-49, B-51, B-53, B-65, B-67, B-69
51656 ..... B-83
51659 ..... B-12, B-15, B-19, B-22, B-25, B-27, B-31, B-33, B-35, B-37, B-39, B-45, B-47, B-49, B-51, B-53, B-55, B-57, B-61, B-63, B-65, B-67, B-69, B-73, B-77, B-79, B-83, B-87, B-89, B-91, B-95
51664 ..... B-39, B-45, B-61, B-63, B-73, B-77, B-79, B-83, B-87, B-89, B-91, B-95
51665 ..... E-2
51666 ..... B-22, B-39, B-45, B-61, B-63, B-73, B-77, B-83, B-87, B-89, B-91
51667 ..... B-45, B-63, B-83, B-95
51670 ..... E-2
51671 ..... B-39, B-45, B-61, B-63, B-73, B-83, B-95
51672 ..... B-39, B-45, B-61, B-63, B-83
51673 ..... B-45
51674 ..... B-39, B-45, B-61, B-63, B-77, B-79, B-83, B-87, B-91, B-95
51675 ..... B-39, B-45, B-61, B-63, B-73, B-77, B-79, B-83, B-87, B-89, B-91, B-95
51689 ..... B-39, B-45, B-63, B-77, B-79, B-83, B-95
51690 ..... B-45, B-63, B-83, B-95
51691 ..... B-39, B-45, B-63, B-73, B-77, B-79, B-83, B-87, B-89, B-91, B-95
51692 ..... B-63
51694 ..... B-45, B-63, B-83, B-95
51695 ..... B-45, B-63, B-83, B-87, B-89, B-91
51696 ..... B-45, B-63, B-83, B-95
51697 ..... B-39, B-45, B-63, B-73, B-77, B-79, B-83, B-87, B-91, B-95
51700 ..... B-40, B-44
51702 ..... C-19, E-7
51705 ..... B-40, B-44
51707 ..... B-29, B-31, B-33, B-35, B-37, B-47, B-49, B-51, B-53, B-65, B-67, B-69
51710 ..... B-40, B-44
51712 ..... B-22
51713 ..... B-7, B-12, B-15, B-19
51714 ..... B-51, B-53
51715 ..... B-40, B-44
51716 ..... B-53
51717 ..... B-53
51718 ..... B-51, B-53
51719 ..... B-51, B-53, B-55
51720 ..... B-41, B-62
51721 ..... B-35, B-37, B-47, B-49, B-51, B-53, B-55, B-65, B-67, B-69
51721C B-35
51722 ..... B-35, B-37, B-47, B-49, B-51, B-53, B-65, B-67, B-69
51722C B-35
51723 ..... B-35, B-37, B-47, B-49, B-51, B-53, B-65, B-67, B-69
51723C B-35
51724 ..... B-35, B-37, B-47, B-49, B-51, B-53, B-65, B-67, B-69
51724C B-35
51725 ..... B-41, B-62
51726 ..... B-35, B-37, B-51, B-53, B-65, B-67, B-69
51726C B-35
51730 ..... B-41, B-62
51731 ..... B-15, B-19
51732 ..... B-22
51733 ..... B-22
51735 ..... B-41, B-62

51736 ..... B-7, B-12, B-15, B-19, B-29, B-31, B-35, B-37, B-47, B-49, B-51, B-53, B-55, B-65, B-67, B-69
51737 ..... B-22, B-39, B-61, B-73, B-77, B-79
51738 ..... B-22
51740 ..... B-41, B-82
51741 ..... B-39, B-73, B-77, B-79
51741C B-39
51742 ..... B-39, B-61, B-77, B-79
51742C B-39
51743 ..... B-39, B-73, B-77, B-79
51744 ..... B-29, B-31, B-33, B-35, B-37, B-47, B-49, B-51, B-53, B-65, B-67, B-69
51745 ..... B-41, B-82
51746 ..... B-29, B-31, B-33, B-35, B-37, B-51, B-53, B-65, B-67, B-69
51748 ..... B-22
51749 ..... B-22
51750 ..... B-41, B-82
51755 ..... B-41, B-82
51760 ..... B-20
51765 ..... B-20
51766 ..... B-65, B-67, B-69
51767 ..... C-27, C-29
51769 ..... C-27, C-29
51770 ..... B-20
51775 ..... B-20
51779 ..... H-6, H-7
51785 ..... C-27
51788 ..... B-77, B-79
51789 ..... B-77, B-79
51791 ..... B-77, B-79
51792 ..... B-79
51793 ..... B-79
51795 ..... B-79
51796 ..... B-77, B-79
51797 ..... B-77, B-79
51798 ..... B-77, B-79
51799 ..... B-77, B-79
51800 ..... B-41, B-64
51802 ..... B-35, B-37, B-47, B-49
51805 ..... B-41, B-64
51808 ..... B-35, B-37, B-47, B-49
51809 ..... B-35, B-37, B-47, B-49
51810 ..... B-41, B-64
51815 ..... B-41, B-64
51820 ..... B-42, B-94
51822 ..... C-28
51825 ..... B-42, B-94
51830 ..... B-42, B-94
51831 ..... B-39, B-77, B-79
51835 ..... B-42, B-94
51840 ..... B-40, B-50
51845 ..... B-40, B-50
51850 ..... B-40, B-50
51855 ..... B-40, B-50
51860 ..... B-40, B-50
51865 ..... B-40, B-48
51870 ..... B-40, B-48
51874 ..... G-36
51875 ..... B-40, B-48
51877 ..... C-26
51879 ..... C-26
51880 ..... B-40, B-48
51885 ..... C-26
51887 ..... C-26
51888 ..... C-26
51899 ..... C-25, C-26
51900 ..... C-26
51900A C-26
51903 ..... C-26
51903A C-26
51908 ..... C-26
51915 ..... B-41, B-78
51920 ..... B-41, B-78
51922 ..... G-65
51923 ..... G-65
51925 ..... B-41, B-78
51926 ..... G-65
51927 ..... G-65
51930 ..... B-41, B-78
51941 ..... G-65
51942 ..... G-65
51945A C-28
51945B C-28
51945C C-28
51950 ..... B-40, B-48
51955 ..... B-47, B-49, B-51, B-53, B-65, B-67
51970 ..... B-39, B-61, B-73
51973 ..... F-4
51975 ..... B-35, B-37
51992 ..... G-65
51993 ..... G-65
51996 ..... G-65
51997 ..... G-65
51998 ..... G-65
52001 ..... G-65
52002 ..... G-65
52003 ..... G-65
52006 ..... G-65
52007 ..... G-65
52008 ..... G-65
52011 ..... G-65
52012 ..... G-65
52013 ..... G-65
52055 ..... B-38
52060 ..... B-38
52065 ..... B-38
52070 ..... B-38
52077 ..... B-22
52092 ..... B-57
52097 ..... B-57
52098 ..... B-57
52099 ..... B-57
52102 ..... B-57
52104 ..... B-57
52111 ..... B-57
52112 ..... B-57
52114 ..... B-33, B-57
52117 ..... B-57
52118 ..... B-57
52121 ..... B-57
52122 ..... B-57
52130 ..... B-13
52134 ..... G-82
52135 ..... B-13
52138 ..... G-88
52141 ..... G-65
52142 ..... G-65
52143 ..... G-65
52144 ..... C-17, C-29
52146 ..... G-65
52147 ..... G-65
52151 ..... G-88
52170 ..... B-41, B-56
52178 ..... D-2, D-3, D-17
52178-0250404. D-2
52178-0500404 D-2
52180 ..... B-57
52185 ..... B-41
52194 ..... B-47
52196 ..... B-47
52197 ..... B-47
52198 ..... F-4, F-5, F-7, F-10
52201 ..... C-17, C-27, C-29
52225 ..... B-40, B-46
52229 ..... B-39
52230 ..... B-40, B-46
52231 ..... B-39, B-45, B-63, B-83, B-95
52232 ..... B-39, B-45, B-63, B-83, B-95
52233 ..... B-39, B-45, B-63, B-83, B-87, B-91, B-95
52235 ..... B-40, B-46
52240 ..... B-40, B-46

52241 ..... D-2, D-3, D-17
52241-0060505 H-3
52241-0100505 . H-3
52241-0250505 D-2
52241-0500505 D-2
52245 ..... B-40, B-46
52265 ..... B-41, B-62
52270 ..... B-38
52275 ..... B-20
52280 ..... B-41, B-82
52285 ..... B-42, B-94
52290 ..... B-40, B-44
52305 ..... G-2
52320-05 ..... G-24
52320-10 ..... G-24
52320-15 ..... G-24
52349 ..... G-13
52386 ..... G-20, G-24
52486 ..... C-17, C-19
52494 ..... B-33
52543 ..... C-13, F-9, F-10, F-12
52550 ..... B-17
52555 ..... B-17
52560 ..... B-17
52565 ..... B-17
52570 ..... B-17
52572 ..... C-19
52575 ..... B-17
52583 ..... C-19
52645 ..... F-9
52657 ..... E-2
52661 ..... E-2
52662 ..... E-2
52663 ..... E-2
52672 ..... E-4
52673 ..... E-4
52674 ..... E-7
52676 ..... E-5
52680 ..... C-16
52684 ..... E-3
52690 ..... C-18, C-19
52695 ..... C-18, C-19
52700 ..... C-19
52701 ..... B-77
52702 ..... B-77
52706 ..... G-89
52708 ..... G-89
52709 ..... G-89
52711 ..... G-89
52750 ..... C-6, C-7, C-10, F-11
52753 ..... G-28
52755 ..... B-41, B-76
52756 ..... C-15, G-28
52757 ..... G-28
52760 ..... B-41, B-76
52762 ..... G-28
52764 ..... G-28
52765 ..... B-41, B-76
52770 ..... B-41, B-76
52785 ..... B-77
52803 ..... G-20
52810 ..... G-89
52815 ..... G-89
52819 ..... G-28
52820 ..... G-27
52840 ..... C-29
52864 ..... B-35, B-37, B-65, B-67
52866 ..... B-51, B-53
52869 ..... B-51
52870 ..... B-31, B-33, B-35, B-51, B-55, B-65, B-67, B-69
52871 ..... B-51
52872 ..... B-35, B-65, B-69
52873 ..... B-35, B-65, B-69
52875 ..... B-29, B-31, B-33, B-35, B-51, B-55, B-65, B-67, B-69
52878 ..... B-29, B-31, B-33, B-35, B-51, B-55, B-65, B-67, B-69
52879 ..... B-29, B-31, B-33, B-35, B-51, B-55, B-65, B-67, B-69
52894 ..... C-26
52958 ..... G-28
52963 ..... G-27
52965 ..... G-28
52983 ..... B-45, B-63, B-83, B-95
53054 ..... E-7
53085 ..... B-34
53090 ..... B-34
53095 ..... B-34
53100 ..... B-34
53105 ..... B-34
53106 ..... G-89, G-90
53107 ..... G-89, G-90
53110 ..... B-34
53135 ..... C-18, C-19
53165 ..... C-8
53175 ..... F-3, F-4, F-5, F-6, F-7
53203 ..... C-9, C-15
53225 ..... F-3
53235 ..... D-2, D-3, D-16
53235-0250707 D-2
53235-0500707 D-2
53240 ..... F-3
53242 ..... B-39, B-45, B-47, B-49, B-51, B-53, B-57, B-61, B-63, B-65, B-67, B-73, B-77, B-83, B-87, B-89, B-91
53270 ..... F-3
53300 ..... F-3
53303 ..... F-3, F-4, F-9
53304 ..... F-3, F-4, F-9
53313 ..... B-35, B-65
53314 ..... B-35, B-51, B-65
53314C B-35
53316 ..... B-33, B-35, B-51, B-65
53321 ..... B-33, B-35, B-51, B-65
53330 ..... B-34
53340 ..... F-4
53345 ..... F-4
53368 ..... C-7, F-11
53371 ..... C-26
53373 ..... F-11, F-12
53374 ..... C-13, F-12
53384 ..... C-7
53384P C-13
53395 ..... G-28
53397 ..... G-28
53398 ..... G-28
53410 ..... G-28
53424 ..... C-7
53440 ..... C-6, C-9
53443 ..... C-25
53444 ..... C-25
53445 ..... C-6
53446 ..... C-25
53475 ..... F-7
53482 ..... G-78
53483 ..... G-78
53484 ..... G-78
53486 ..... G-78
53487 ..... G-78
53549 ..... C-7, C-10, F-11
53555 ..... B-41, B-68
53560 ..... B-41, B-68
53565 ..... B-41, B-68
53575 ..... B-41, B-68
53585 ..... B-41, B-68
53590 ..... B-69
53598 ..... B-69
53600 ..... B-19
53601 ..... B-69
53602 ..... B-69
53605 ..... C-18, C-19
53623 ..... E-6
53680 ..... C-12, C-15
53695 ..... C-8
53731 ..... D-13, D-21
53738 ..... C-38
53788 ..... C-7, C-10, C-11, C-13
53793 ..... B-55, B-69, B-79,

B-95
53844 ..... G-3
53845 ..... C-6, C-10
53859 ..... C-17
53912 ..... C-17
53915 ..... C-6, C-7, C-11, F-11
53920 ..... B-25, B-27, C-16, C-29
53935 ..... C-6, C-9
53954 ..... C-7, C-11, F-11
53959 ..... C-7, C-11, F-11
54077 ..... C-17, C-29
54153 ..... G-81
54154 ..... G-81
54156 ..... G-81
54157 ..... G-81
54158 ..... G-81
54165 ..... G-60
54166 ..... G-60
54168 ..... G-84
54169 ..... G-84
54171 ..... G-84
54172 ..... G-84
54173 ..... G-84
54178 ..... E-3
54180 ..... E-3
54180F E-3
54184 ..... G-59
54238 ..... C-18
54261 ..... C-4
54268 ..... C-26
54269 ..... C-26
54271 ..... C-26
54272 ..... C-26
54276 ..... G-2
54277 ..... G-2
54293 ..... C-26
54299 ..... D-13, D-21
54321 ..... C-7, C-10, C-11
54330 ..... F-8, F-9
54342 ..... C-7
54360 ..... F-3
54368 ..... E-3
54375 ..... F-3
54411 ..... D-14, D-22
54415 ..... F-3
54420 ..... F-3
54424 ..... B-87, B-89
54425 ..... F-3
54426 ..... B-87
54427 ..... B-89
54428 ..... B-87, B-89, B-91
54429 ..... B-89
54432 ..... C-18, C-19
54445 ..... F-8, F-9
54450 ..... F-9
54452 ..... G-20
54496 ..... B-87
54497 ..... B-87
54501 ..... B-87, B-91
54502 ..... B-87, B-91
54503 ..... B-87, B-91
54506 ..... B-87, B-91
54507 ..... B-87, B-91
54508 ..... B-87, B-91
54535 ..... G-20
54545 ..... B-41, B-86
54550 ..... B-41, B-86
54555 ..... B-41, B-86
54560 ..... B-41, B-86
54592 ..... C-32
54605 ..... F-3
54626 ..... B-33
54627 ..... B-33
54628 ..... B-33
54629 ..... B-33
54631 ..... B-33
54638 ..... B-33
54650 ..... B-32
54655 ..... B-32
54690 ..... B-33
54700 ..... B-32
54705 ..... F-4
54709 ..... G-88
54719 ..... E-10
54721 ..... E-6
54724 ..... C-8
54754 ..... E-3
54758 ..... E-3
54761 ..... E-3
54762 ..... E-3
54763 ..... E-3
54764 ..... E-3
54766 ..... E-3
54767 ..... E-3
54768 ..... E-3
54769 ..... E-20
54777 ..... C-8
54781 ..... E-20
54783 ..... E-20
54784 ..... E-20
54787 ..... E-20
54788 ..... E-20
54789 ..... E-3, E-20
54844 ..... E-16
54846 ..... E-16
54847 ..... E-16
54849 ..... B-33
54851 ..... B-33
54854 ..... E-16
54872 ..... B-32
54873 ..... B-32
54895 ..... B-57
54900 ..... F-4
54906 ..... B-32
54938 ..... E-17
54958 ..... E-11
54995 ..... C-6
55033 ..... E-10
55080 ..... B-13
55085 ..... B-13
55090 ..... B-13
55091 ..... E-12
55092 ..... E-12
55093 ..... E-12
55094 ..... E-12
55095 ..... B-13
55096 ..... E-12
55097 ..... E-12
55098 ..... E-12
55099 ..... E-12
55120 ..... C-6, C-10
55176 ..... C-37
55186 ..... B-42
55190 ..... B-42
55194 ..... B-42
55198 ..... B-42
55222 ..... E-13
55223 ..... E-13
55224 ..... E-12
55252 ..... B-22
55253 ..... B-15, B-19
55266 ..... B-87, B-89, B-91
55267 ..... B-91
55268 ..... B-91
55269 ..... B-91
55270 ..... B-42, B-90
55271 ..... B-91
55275 ..... B-42, B-90
55280 ..... B-42, B-90
55285 ..... B-42, B-90
55296 ..... E-16
55297 ..... C-29
55304 ..... C-29
55316 ..... C-38
55330 ..... C-29
55338 ..... B-42
55339 ..... B-42
55340 ..... B-42
55341 ..... B-42
55343 ..... B-42
55344 ..... B-42
55345 ..... B-42
55346 ..... B-42
55347 ..... B-42
55348 ..... B-42
55351 ..... B-42
55352 ..... B-42
55353 ..... B-42
55354 ..... B-42
55355 ..... B-42

55402 ..... C-37
55416 ..... C-37
55432 ..... F-11, F-12
55435 ..... F-11
55450 ..... E-8
55450-04 ..... F-7, G-62
55450-06 ..... F-7
55450-7 ..... G-25, H-10
55450-11 ..... F-6
55450-36 ..... F-6
55450-48 ..... F-5
55477 ..... B-35, B-37
55489 ..... B-87, B-91
55491 ..... B-87
55497 ..... F-6, F-7
55516 ..... C-23
55519 ..... C-23
55520 ..... C-22
55521 ..... C-23
55522 ..... C-23
55523 ..... C-23
55524 ..... C-23
55530 ..... C-22
55531 ..... C-23
55540 ..... C-23
56416 ..... B-45
56547 ..... E-3
56551 ..... C-25
56594 ..... E-4
56604 ..... C-16
56614 ..... E-3
56616 ..... E-3
56692 ..... D-13, D-21
56742 ..... C-4
56861 ..... E-16
56862 ..... E-16
56863 ..... E-16
56949 ..... B-15, B-19, C-4
56950 ..... C-4
56999 ..... C-7, C-13
57066 ..... F-7
57076 ..... F-7
57169 ..... C-32
57197 ..... C-16
57244 ..... B-11, B-14, B-18
57345 ..... B-42
57432 ..... C-11
57853 ..... C-36
57856 ..... C-36
57858 ..... C-36
57888 ..... C-35
57902 ..... C-25
57927 ..... G-35
57956-66 ..... F-3, F-4, F-5, F-6, F-7
57962 ..... C-18, C-19
57970 ..... C-25
57986-66 ..... F-9, F-10
57997 ..... B-33
57998 ..... H-24
58000 ..... C-36
58002 ..... C-36
58044 ..... C-36
58100 ..... H-3
58101 ..... H-3
58196 ..... C-10, C-11
58279 ..... B-33
58305 ..... C-36
58314 ..... C-36
58414 ..... C-35
58422 ..... B-7
58493 ..... B-9
58497 ..... B-9
58498 ..... B-9
58499 ..... B-9
58501-17-68 ..... B-21
58501-18-66 ..... B-21
58501-21-63 ..... B-21
58501-24-60 ..... B-21
58547 ..... B-9
58576 ..... B-9
58577 ..... B-9
58848 ..... C-7
58864 ..... C-9, C-15
58865 ..... C-9, C-15
58867 ..... C-9, C-15
58868 ..... C-9, C-15
58901 ..... H-16
58901-V H-16
58902 ..... H-16
58902-V H-16
58903 ..... H-19
58932 ..... H-19
58944 ..... H-17
58945 ..... H-17
58946 ..... H-17
58947 ..... H-17
58948 ..... H-17
58949 ..... H-17
58950 ..... H-17
58951 ..... H-17
58952 ..... H-17
58955 ..... H-19
58956 ..... H-17
58956-V H-17
58957 ..... H-17
58957-V H-17
58958 ..... H-17
58958-V H-17
58959-V H-17
58960-V H-17
58961-V H-17
58962 ..... H-16
58962-V H-16
58963 ..... H-16
58963-V H-16
58964 ..... H-16
58964-V H-16
58965 ..... H-16
58965-V H-16
58966 ..... H-17
58966-V H-17
58967 ..... H-17
58967-V H-17
58968 ..... H-17
58968-V H-17
58969-V H-17
58970-V H-17
58971-V H-17
58972 ..... H-18
58973 ..... H-18
58974 ..... H-18
58978 ..... H-18
58979 ..... H-18
58980 ..... G-24, H-18
58981 ..... G-24, H-18
58982 ..... H-18
58983 ..... H-18
58984 ..... H-18
58985 ..... H-18
58986 ..... H-18
58987 ..... H-18
58988 ..... H-18
58989 ..... H-18
58990 ..... H-18
58991 ..... H-18
58992 ..... H-18
58993 ..... H-18
58996 ..... H-19
58997 ..... H-19
59000 ..... H-19
59001 ..... H-19
59002 ..... H-19
59003 ..... H-19
59004 ..... H-19
59005 ..... H-19
59006 ..... H-19
59007 ..... H-19
59008 ..... H-4
59009 ..... H-4
59010 ..... H-4
59011 ..... H-4
59012 ..... H-4
59013 ..... H-4
59014 ..... H-4
59015 ..... H-19
59016 ..... H-19
59047 ..... C-27
59100-16-69-12V B-11, B-14, B-18
59100-16-69-24V B-11, B-14, B-18
59100-17-68-12V B-11, B-14, B-18

59100-17-68-24V B-11, B-14, B-18
59100-19-67-12V B-11, B-14, B-18
59100-19-67-24V B-11, B-14, B-18
59100-22-64-12V B-11, B-14, B-18
59100-22-64-24V B-11, B-14, B-18
59101 ..... B-11, B-14, B-18
59149 ..... C-21
59189 ..... E-12
59229 ..... H-8
59248 ..... B-7
59260 ..... B-7
59291 ..... H-5
59318 ..... B-33
59374 ..... F-11
59376 ..... F-11
59377 ..... F-12
59391 ..... H-3
59399 ..... B-22
59405 ..... B-40
59459 ..... C-8
59492 ..... H-18
59853 ..... H-17
59854 ..... H-17
59855 ..... H-17
59859 ..... H-17
59860 ..... H-17
59861 ..... H-17
59869 ..... H-17
59870 ..... H-17
59871 ..... H-17
59873 ..... H-16
59873-V H-16
59874 ..... H-16
59874-V H-16
59875 ..... H-16, H-18
59875-V H-16
59876 ..... H-16, H-18
59876-V H-16
59877 ..... H-18
59900 ..... G-65
59901 ..... G-65
59902 ..... G-65
59903 ..... G-65
59904 ..... G-65
59905 ..... G-65
59906 ..... G-65
59907 ..... G-65
59908 ..... G-65
59932 ..... G-65
59933 ..... G-65
59934 ..... G-65
60026 ..... C-10, C-11
60075 ..... C-10, C-11
60248 ..... B-33
60265 ..... B-25
60288 ..... H-7
60289 ..... H-7
60311 ..... H-7
60350 ..... B-7
60396 ..... H-22
60419 ..... C-12, C-13, F-8, F-9, F-10, F-12
60451 ..... B-25, B-27
60600 ..... B-25, B-27
60602 ..... B-25, B-27
60603 ..... B-25, B-27
60607 ..... B-25, B-27
60608 ..... B-33
60611 ..... B-25, B-27
60613 ..... B-32
60650 ..... C-14
60663 ..... B-9
60740 ..... C-35
60758 ..... B-25, B-27
60765 ..... C-31, C-33
60766 ..... C-33
60767 ..... C-33
60815 ..... B-61, B-63
60821 ..... B-25, B-27
60897 ..... E-15
60903 ..... B-25
60951 ..... B-25, B-27, B-31, C-17, E-15
60952 ..... B-25, E-14
60953 ..... B-31, E-14
60954 ..... B-25, B-27, B-31, E-15
60955 ..... B-25, B-27, E-15
60998 ..... H-7
61011 ..... B-9
61046 ..... H-7
61050 ..... H-7
61124 ..... B-35
61129 ..... B-9
61141 ..... B-25, B-27
61142 ..... B-25, B-27
61143 ..... B-25, B-27
61145 ..... B-25
61148 ..... H-7
61152 ..... B-9
61166 ..... B-9
61167 ..... B-9
61168 ..... B-9
61169 ..... B-9
61171 ..... B-9
61173 ..... B-9
61174 ..... B-9
61175 ..... B-9
61178 ..... B-9
61179 ..... B-9
61255 ..... H-5
61264 ..... B-25, B-27
61271 ..... B-27
61272 ..... B-25, B-27
61283 ..... H-8
61284 ..... H-8
61288 ..... H-8
61322 ..... E-17
61331 ..... C-31
61374 ..... H-7
61376 ..... C-30
61378 ..... C-31
61415 ..... H-19
61447 ..... G-26, H-8
61448 ..... H-8
61449 ..... H-8
61450 ..... H-8
61461 ..... H-8
61503 ..... E-16
61511 ..... B-33
61512 ..... B-33
61534 ..... B-32
61539 ..... E-21
61540 ..... E-21
61541 ..... E-21
61542 ..... E-21
61543 ..... E-21
61607 ..... C-35
61626 ..... C-37
61686-08 ..... C-31
61687 ..... C-31
61721 ..... B-15, B-19
61823 ..... B-27, E-15
61880 ..... F-5, F-6
61904_0 ..... C-33
61916 ..... B-25, B-27
61917 ..... B-25, B-27
61918 ..... B-25, B-27
61922 ..... B-25, B-27
61924 ..... B-25, B-27
61933 ..... B-25, B-27
61936 ..... B-25, B-27
61974 ..... B-25
61977 ..... B-25
61993 ..... C-31
62055 ..... F-10
62093 ..... C-4
62110 ..... C-5
62113 ..... A-4
62125 ..... B-25, B-27
62126 ..... B-25, B-27
62132 ..... B-25, B-27
62140 ..... C-5
62171-GRN B-39, B-45, B-47, B-61, B-63, B-65, B-83
62172-GRN B-35
62173 ..... B-24, B-26
62174 ..... B-24, B-26
62175 ..... B-24, B-26
62176 ..... B-24, B-26

62178 ..... B-25, B-27
62179 ..... B-25, B-27
62180 ..... B-25, B-27
62181 ..... B-25, B-27
62194 ..... B-25, B-27
62210 ..... B-25
62212 ..... B-25
62243 ..... B-25, B-27
62247 ..... B-9
62248 ..... B-9
62252 ..... B-9
62253 ..... E-12
62254 ..... B-27
62257 ..... H-4
62259 ..... C-11
62267 ..... B-25
62284 ..... E-15
62288 ..... E-17
62289 ..... E-16
62337 ..... B-9
62349 ..... B-25, B-27
62379 ..... B-25, B-27
62413 ..... C-24
62471 ..... B-25, B-27
62652 ..... C-35
62741 ..... E-17
62756 ..... B-17
62835 ..... C-21
62838 ..... C-21
62903 ..... C-21
62966 ..... C-21
62981 ..... B-27
63019 ..... B-27
63057 ..... B-27
63064 ..... C-20
63068 ..... B-27
63069 ..... C-21
63070 ..... C-21
63076-008 ..... C-21
63079 ..... C-21
63081 ..... C-21
63087 ..... C-21
63089 ..... C-21, E-15
63092 ..... B-27
63114 ..... B-27
63115 ..... B-27
63144 ..... C-34
63147 ..... C-34
63148 ..... C-34
63156 ..... B-27
63177 ..... B-27
63178 ..... B-27
63179 ..... B-27
63202 ..... G-2
63207 ..... G-2
63210 ..... H-5
63222-XX D-14
63230 ..... G-2
63282 ..... B-9, C-21
63283 ..... C-21
63292 ..... C-21
63302 ..... G-2
63305 ..... G-2
63306 ..... G-2
63576 ..... E-15
63765 ..... B-35
63767 ..... B-35
63768 ..... B-35
63790 ..... B-11, B-14, B-18
63793 ..... B-35
63794 ..... B-13, B-17, B-34
63811 ..... G-20, G-30
63813 ..... G-20
63842-ROTO-6 ... G-25, H-9
63842-ROTO-8 .. G-25, H-9
63842-ROTO-10. G-25, H-9
63842-SWVL-6 .. G-29, H-9
63842-SWVL-8 .. G-29, H-9
63842-SWVL-10 G-29, H-9
63843-H30 ..... G-31
63843-ROTO G-25, H-10
63843-SWVL G-29, H-10
63888 ..... C-17
63944 ..... G-20
63945 ..... G-20
64007 ..... G-13
64054 ..... G-28
64088 ..... G-65
64089 ..... G-65
64090 ..... G-65
64091 ..... G-65
64100 ..... G-13
64103 ..... G-13
64104 ..... G-65
64105 ..... G-65
64106 ..... G-65
64107 ..... G-65
64149 ..... C-24
64150 ..... C-24
64153 ..... C-24
64154 ..... C-24
64158 ..... C-24
64180 ..... G-27, G-28
64233 ..... G-27
64234 ..... G-27
64247 ..... G-27
64266 ..... F-3, F-4, F-5, F-6, F-7, F-9, F-10
64298 ..... H-14
64299 ..... H-14
64300 ..... H-14
64452-L15-8 ..... G-26, G-29, H-11
64452-L15-12 ..... G-26, G-29, H-11
64452-L20 ..... H-11
64452-L40 ..... H-11
64452-M15-8 ..... G-26, G-29, H-11
64452-M15-12 ..... G-26, G-29, H-11
64452-M20 ..... H-11
64452-M40 ..... H-11
64452-S15-8 ..... G-26, G-29, H-11
64452-S15-12 ..... G-26, G-29, H-11
64452-S20 ..... H-11
64452-S40 ..... H-11
64625 ..... H-24
64682 ..... E-8, G-20, G-24, G-33, G-59, G-61, G-62
64772 ..... G-6
64823 ..... G-17
64827 ..... G-17
64864 ..... G-13, G-17
64883 ..... B-11, B-14, B-18
64998 ..... C-9, C-15
64999 ..... C-9, C-15
65001 ..... C-9
65002 ..... C-9, C-15
65011 ..... C-9, C-15
65012 ..... C-9, C-15
65025 ..... B-3
65082 ..... B-11, B-14, B-18
65094 ..... G-20
65095 ..... G-20
65121 ..... B-40
65123 ..... B-40
65124 ..... B-40
65125 ..... B-40
65126 ..... B-40
65129 ..... G-20
65130 ..... G-20
65162 ..... G-27
65166-05 ..... G-24
65166-10 ..... G-24
65166-15 ..... G-24
65187 ..... B-86
65207 ..... G-33
65213 ..... G-35
65214 ..... G-32
65215 ..... G-32
65216 ..... G-35
65217 ..... G-32
65218 ..... G-33
65219 ..... G-35
65220 ..... G-32
65221 ..... G-32, G-33
65225 ..... G-6
65226 ..... G-32
65227 ..... G-35
65228 ..... G-35
65229 ..... G-32
65230 ..... G-32, G-33
65233 ..... G-30, G-32

65234 ..... G-35
65236 ..... G-33
65237 ..... G-33, G-35
65238 ..... G-35
65239 ..... G-32
65240 ..... G-32
65241 ..... G-33
65242 ..... G-35
65243 ..... G-35
65244 ..... G-35
65245 ..... G-35
65246 ..... G-35
65247 ..... G-35
65248 ..... G-33
65250 ..... G-33
65272 ..... G-6
65273 ..... G-6
65274 ..... G-6
65275 ..... G-6
65289 ..... G-35
65290 ..... G-32
65291 ..... G-33
65292 ..... G-32
65293 ..... G-35
65297 ..... G-32
65298 ..... G-32
65300 ..... G-33
65301 ..... G-33
65323 ..... G-27
65326 ..... G-27
65327 ..... G-27
65328 ..... G-27
65333 ..... G-32, G-33
65367 ..... G-30
65368 ..... C-10
65387 ..... G-17
65388 ..... G-17
65402 ..... G-33
65409 ..... G-32
65410 ..... G-32
65411 ..... G-35
65412 ..... G-35
65413 ..... G-35
65414 ..... G-35
65415 ..... G-35
65416 ..... G-35
65417 ..... G-35
65419 ..... G-35
65420 ..... G-35
65421 ..... G-35
65452 ..... G-35
65453 ..... G-35
65454 ..... G-32, G-35
65455 ..... G-35
65456-01 ..... G-31
65456-02 ..... G-28, G-31
65456-06 ..... G-28, G-31
65456-12 ..... G-28, G-31
65456-24 ..... G-28, G-31
65456-30 ..... G-28, G-31
65456-36 ..... G-28, G-31
65456-42 ..... G-28
65456-XX G-33
65463 ..... G-32
65498 ..... H-21
65633 ..... G-30
65634 ..... G-30
65644 ..... H-14
65645 ..... G-32
65656 ..... C-7
65664 ..... G-30
65665 ..... G-30
65666 ..... G-30
65667 ..... G-30
65670 ..... H-5
65671 ..... H-5
65675 ..... G-31
65676 ..... G-31
65677 ..... G-31
65678 ..... G-31
65729 ..... G-31
65739 ..... F-5
65740 ..... F-6
65741 ..... F-5, F-6
65742 ..... F-10
65745 ..... F-5
65746 ..... F-6
65747 ..... F-8, F-10
65808 ..... F-3, F-4, F-5, F-6, F-9, F-10
65816 ..... G-28, G-35
65857 ..... C-24
65906 ..... G-13
65911 ..... H-14
65919 ..... G-13
65921 ..... G-13
65922 ..... G-13
65923 ..... G-13
65925 ..... H-14
65978 ..... G-28
65998 ..... F-3, F-4, F-5, F-6, F-7, F-9, F-10
66003 ..... G-27
66087 ..... B-12
66089 ..... B-12
66090 ..... H-14
66104-06 ..... G-25, G-29, H-9
66104-08 ..... G-25, G-29, H-9
66104-10 ..... G-25, G-29, H-9
66112 ..... B-12
66114 ..... F-11, F-12
66137 ..... G-17
66139 ..... G-31
66168 ..... B-3
66170 ..... G-20, G-24
66199 ..... G-28
66220 ..... G-13
66248 ..... G-13
66249 ..... G-13
66274 ..... H-7
66288 ..... H-7
66291 ..... H-7
66293 ..... H-7
66294 ..... H-7
66296 ..... H-7
66297 ..... H-7
66298 ..... H-7
66299 ..... H-7
66300 ..... H-7
66302 ..... H-7
66332 ..... F-3, F-4, F-5, F-6, F-9, F-10
66336 ..... G-13
66339 ..... G-30
66347 ..... G-17
66348 ..... G-17
66358 ..... G-31, G-33
66359 ..... G-31, G-34
66360 ..... G-31, G-32
66361 ..... G-31, G-32
66509 ..... B-3
66510 ..... B-3
66511 ..... B-3
66512 ..... B-3
66513 ..... B-3
66514 ..... B-3
66515 ..... B-3
66516 ..... B-3
66517 ..... B-3
66518 ..... B-3
66519 ..... B-3
66520 ..... B-3
66523 ..... B-3
66524 ..... B-3
66552 ..... H-20
66553 ..... H-20
66554 ..... H-20
66555 ..... H-20
66556 ..... H-20
66557 ..... H-20
66560 ..... E-13
66607 ..... C-5
66608 ..... C-5
66645 ..... H-21
66646 ..... H-21
66647 ..... H-21
66648 ..... H-22
66649 ..... H-15
66650 ..... H-15
66651 ..... H-15
66652 ..... H-15

66653 ..... H-15
66658 ..... E-22
66659 ..... E-22
66660 ..... E-22
66661 ..... E-22
66687 ..... H-20
66688 ..... H-20
66689 ..... H-20
66690 ..... H-20
66691 ..... H-20
66692 ..... H-20
66693 ..... H-20
66694 ..... H-20
66695 ..... H-20
66696 ..... H-20
66697 ..... H-20
66698 ..... H-20
66699 ..... H-20
66700 ..... H-20
66701 ..... H-21
66702 ..... H-21
66703 ..... H-21
66704 ..... H-21
66705 ..... H-21
66706 ..... H-21
66707 ..... H-21
66708 ..... H-20
66709 ..... H-20
66710 ..... H-20
66711 ..... H-20
66712 ..... H-20
66713 ..... H-20
66714 ..... H-20
66715 ..... H-20
66716 ..... H-20
66717 ..... H-20
66718 ..... H-20
66719 ..... H-20
66720 ..... H-20
66721 ..... H-20
66722 ..... H-21
66723 ..... H-21
66724 ..... H-21
66725 ..... H-21
66726 ..... H-21
66727 ..... H-21
66728 ..... H-21
66740 ..... G-17
66741 ..... G-17
66743 ..... H-5
66752 ..... E-22
66753 ..... E-22
66754 ..... E-22
66757 ..... E-22
66865 ..... H-7
66866 ..... H-7
66867 ..... H-7
66870 ..... H-7
66871 ..... H-7
66889 ..... H-7
66890 ..... H-7
66957 ..... C-24
66958 ..... C-24
66961 ..... B-12
66964 ..... B-12
67028 ..... G-13
67029 ..... G-12
67030 ..... G-12
67031 ..... G-12
67032 ..... G-12
67037 ..... B-31
67038 ..... B-29, B-31
67039 ..... B-29, B-31
67040 ..... B-29, B-31
67069 ..... B-31
67070 ..... B-29, B-31
67076 ..... B-7, B-12
67078 ..... B-12
67088 ..... G-9
67089 ..... G-9
67090 ..... G-9
67093 ..... G-9
67094 ..... G-9
67095 ..... G-9
67100 ..... G-9
67101 ..... G-9
67102 ..... G-9
67103 ..... G-9
67114 ..... B-55
67115 ..... B-55
67132 ..... B-40, B-54
67133 ..... B-55
67143 ..... C-24
67148-008 ..... C-24
67158 ..... C-24
67160 ..... B-55
67173 ..... E-12
67264 ..... B-55
67266 ..... C-17
67276 ..... B-55
67277 ..... B-31
67284 ..... B-55
67285 ..... B-55
67298 ..... B-12
67299 ..... B-7, B-12
67301 ..... B-12
67305 ..... B-7, B-12
67310 ..... C-17
67322 ..... B-55
67328 ..... C-24
67329 ..... C-24
67340 ..... B-12
67341 ..... B-7, B-12
67342 ..... B-7, B-12
67343 ..... B-7, B-12
67345 ..... B-7, B-12
67346 ..... B-12
67347 ..... B-12
67348 ..... B-7, B-12
67349 ..... B-7, B-12
67354 ..... B-10
67355 ..... B-10
67356 ..... B-10
67357 ..... B-10
67378 ..... B-30
67379 ..... B-30
67380 ..... B-30
67381 ..... B-30
67392 ..... C-16
67412 ..... B-7, B-12, B-29, B-31
67437 ..... B-25, B-27
67445 ..... H-16
67446 ..... H-16
67450 ..... E-22
67451 ..... E-22
67452 ..... E-22
67453 ..... E-22
67454 ..... E-22
67455 ..... E-22
67491 ..... G-9
67519 ..... E-22
67520 ..... E-22
67521 ..... E-22
67524 ..... E-22
67526 ..... H-19
67527 ..... H-19
67543 ..... B-61
67548 ..... B-29, B-31
67583 ..... B-41
67588 ..... B-12
67613 ..... B-12
67614 ..... B-12
67625 ..... B-61
67627 ..... G-12
67628 ..... G-12
67629 ..... G-12
67630 ..... G-12
67631 ..... G-12
67632 ..... G-12
67633 ..... G-12
67634 ..... G-12
67657 ..... H-21
67658 ..... H-21
67659 ..... H-15
67660 ..... H-15
67661 ..... H-15
67681 ..... C-24
67686 ..... B-29
67687 ..... B-7
67735 ..... B-7
67748 ..... B-39

67752 ..... B-7
67753 ..... B-7
67757 ..... B-7
67763 ..... B-7
67769 ..... B-29
67776 ..... C-35
67779-01 ..... B-9
67779-02 ..... B-9
67779-03 ..... B-9
67780 ..... B-7
67781 ..... B-7, B-12, B-29, B-31
67784 ..... B-7, B-9
67785 ..... B-9
67786 ..... B-9
67787 ..... B-9
67788 ..... B-9
67789 ..... B-9
67804 ..... B-7
67808 ..... B-29, B-31
67821 ..... G-9
67822 ..... G-9
67823 ..... G-9
67826 ..... B-39
67838 ..... B-61
67844 ..... C-24
67859 ..... G-8
67860 ..... G-8
67861 ..... G-8
67862 ..... G-8
67863 ..... G-8
67864 ..... G-8
67869 ..... G-9
67870 ..... G-9
67871 ..... G-8
67872 ..... G-8
67873 ..... G-8
67874 ..... G-8
67875 ..... G-8
67876 ..... G-8
67877 ..... G-8
67878 ..... G-8
67879 ..... G-8
67880 ..... G-8
67881 ..... G-8
67882 ..... G-8
67896 ..... E-11
67901 ..... H-13
67908 ..... H-13
67919 ..... H-13
67920 ..... H-13
67921 ..... H-13
67922 ..... H-13
67923 ..... H-13
67924 ..... H-13
67925 ..... H-13
67926 ..... H-13
67927 ..... H-13
67928 ..... H-13
67929 ..... H-13
67930 ..... H-13
67931 ..... H-13
67936 ..... H-13
68007 ..... B-9
68030 ..... B-55
68130 ..... G-9
68158 ..... C-24
68159 ..... C-24
68160 ..... C-24
68161 ..... C-24
68162 ..... C-24
68166 ..... C-24
68453-17-68 ..... B-21
68453-18-66 ..... B-21
68453-21-63 ..... B-21
68453-24-60 ..... B-21
68454 ..... B-38
68459 ..... B-39
68528 ..... G-59
68573 ..... B-73
68574 ..... B-73
68577 ..... B-73
68584 ..... B-41, B-72
68638 ..... B-20
68656 ..... G-17
68714-GRN B-29
68883 ..... G-16
68884 ..... G-16
68885 ..... G-16
68886 ..... G-16
68887 ..... G-16
68888 ..... G-16
68889 ..... G-16, G-17
68890 ..... G-16
68891 ..... G-16
68898 ..... G-17
68910 ..... B-7
68911 ..... B-9
69016 ..... B-41, B-72
69056 ..... B-7
69057 ..... B-9
69059 ..... B-9
69060 ..... B-9
69061 ..... B-9
69063 ..... B-7
69066 ..... B-7, B-9
69067 ..... B-9
69068 ..... B-7, B-29
69077 ..... B-9
69096 ..... B-9
69121 ..... B-28
69180 ..... B-9
69181 ..... B-9
69184 ..... B-9
69200 ..... B-9
69249 ..... B-7
69250 ..... B-9
69254-3.3-12V B-5
69254-3.3-24V B-5
69254-3.9-12V B-5
69254-3.9-24V B-5
69293-3.3-12V B-5
69293-3.3-24V B-5
69293-3.9-12V B-5
69293-3.9-24V B-5
69294-3.3-12V B-5
69294-3.3-24V B-5
69294-3.9-12V B-5
69294-3.9-24V B-5
69383 ..... B-28
69384 ..... B-28
69389 ..... B-29
70034-36 ..... G-90
70034-50 ..... G-90
70034-60 ..... G-90
70034-80 ..... G-90
70034-120 ..... G-90
70039 ..... B-33
70040 ..... E-9
70125 ..... C-23
70127 ..... C-23
70130 ..... C-17, C-23
70167 ..... E-10
70168 ..... E-10
70174 ..... C-17
70179 ..... C-5
70206 ..... B-11, B-14, B-18
70968 ..... C-35
71016 ..... B-22
71017 ..... B-7, B-12, B-15, B-19
71066 ..... B-9
71147 ..... B-15, H-24
71147-FE B-35, B-39, H-24
71202 ..... C-36
71254 ..... C-35
71318 ..... B-7, B-12, B-15, B-19, B-22
71321 ..... C-21
71496 ..... C-17
71502 ..... B-9
71613 ..... H-22
71614 ..... H-22
71615 ..... H-22
71671 ..... C-36
71706 ..... C-32
71716 ..... C-32
71717 ..... C-32
71742 ..... F-3, F-4, F-5, F-6, F-7, F-9, F-10, H-24
71743 ..... H-2
71744 ..... H-24
90262 ..... E-3

92011 ..... E-5
96048 ..... E-3
C1 ..... G-79
C2 ..... G-79
DJ9.5-P1-222-15-8 G-64
DJ9.5-P1-322-15-8 G-64
DJ13-BSPP2-222-15-10 G-64
DJ13-BSPP2-322-15-10 G-64
DJ13-P2-222-15-10 G-64
DJ13-P2-322-15-10 G-64
DJ18-P4-222-15-10 G-64
DJ18-P4-222-15-14 G-64
DJ18-P4-322-15-10 G-64
DJ18-P4-322-15-14 G-64
DJ24-P6-222-15-10 G-64
DJ24-P6-222-15-15 G-64
DJ24-P6-222-15-24 G-64
DJ24-P6-322-15-10 G-64
DJ24-P6-322-15-15 G-64
DJ24-P6-322-15-24 G-64
DJ33-P8-222-15-17 G-64
DJ33-P8-222-15-24 G-64
DJ33-P8-222-15-32 G-64
DJ33-P8-222-15-37 G-64
DJ33-P8-222-15-47 G-64
DJ33-P8-322-15-17 G-64
DJ33-P8-322-15-24 G-64
DJ33-P8-322-15-32 G-64
DJ33-P8-322-15-37 G-64
DJ33-P8-322-15-47 G-64
E0 ..... G-82
E1 ..... G-82
E2 ..... G-82
E3 ..... G-82
E4 ..... G-82
EX1 ..... G-84
EX3 ..... G-84
EX4 ..... G-84
EX5 ..... G-84
EX6 ..... G-84
FB2 ..... G-75
FB4 ..... G-75
FM7 ..... G-73, G-75
FP1 ..... G-77
FP3 ..... G-77
FP4 ..... G-77
FP5 ..... G-77
FP6 ..... G-77
FP7 ..... G-77
FPC1 ..... G-78
FPC3 ..... G-78
FPC4 ..... G-78
FPC5 ..... G-78
FPC6 ..... G-78
FPT1 ..... G-81
FPT3 ..... G-81
FPT4 ..... G-81
FPT5 ..... G-81
FPT6 ..... G-81
HHD-038 ..... G-48
HHD-042 ..... G-48
HHD-047 ..... G-48
HHD-052 ..... G-48
HHD-057 ..... G-48
HHD-063 ..... G-48
HHD-069 ..... G-48
HHD-073 ..... G-48
HHD-078 ..... G-48
HHS0-025 ..... G-48
HHS0-029 ..... G-48
HHS0-033 ..... G-48
HHS0-038 ..... G-48
HHS0-042 ..... G-48
HHS0-046 ..... G-48
HHS0-055 ..... G-48
HHTC0-018 ..... G-47
HHTC0-020 ..... G-47
HHTC0-022 ..... G-47
HHTC0-024 ..... G-47
HHTC0-026 ..... G-47
HHTC0-029 ..... G-47
HHTC0-032 ..... G-47
HHTC0-035 ..... G-47
HHTC0-038 ..... G-47
HHTC0-042 ..... G-47
HHTC0-047 ..... G-47
HHTC0-052 ..... G-47
HHTC0-057 ..... G-47
HHTC0-063 ..... G-47
HHTC0-067 ..... G-47
HHTC0-069 ..... G-47
HHTC0-073 ..... G-47
HHTC0-075 ..... G-47
HHTC0-078 ..... G-47
HHTC0-082 ..... G-47
HHTC0-090 ..... G-47
HHTC0-093 ..... G-47
HHTC0-098 ..... G-47
HHTC0-106 ..... G-47
HHTC0-110 ..... G-47
HHTC0-115 ..... G-47
HHTC0-125 ..... G-47
HHTC0-135 ..... G-47
HHTC0-145 ..... G-47
HHTC0-155 ..... G-47
HHTC0-165 ..... G-47
HHTC15-029 ..... G-47
HHTC15-038 ..... G-47
HHTC15-042 ..... G-47
HHTC15-047 ..... G-47
HHTC15-057 ..... G-47
HHTC15-063 ..... G-47
HHTC15-067 ..... G-47
HHTC15-069 ..... G-47
HHTC15-073 ..... G-47
HHTC15-078 ..... G-47
HHTC15-082 ..... G-47
HHTC15-090 ..... G-47
HHTC15-093 ..... G-47
HHTC25-047 ..... G-47
HHTC25-057 ..... G-47
HHTC25-063 ..... G-47
HHTC25-067 ..... G-47
HHTC25-069 ..... G-47
HHTC25-073 ..... G-47
HHTC25-078 ..... G-47
HHTC25-093 ..... G-47
HHTC50-057 ..... G-47
HHTC50-063 ..... G-47
HHTC50-067 ..... G-47
HHTC50-069 ..... G-47
HHTC50-073 ..... G-47
HHTC50-078 ..... G-47
HP0-018 ..... G-36
HP0-020 ..... G-36
HP0-022 ..... G-36
HP0-024 ..... G-36
HP0-026 ..... G-36
HP0-029 ..... G-36
HP0-032 ..... G-36
HP0-035 ..... G-36
HP0-038 ..... G-36
HP0-042 ..... G-36
HP0-047 ..... G-36
HP0-052 ..... G-36
HP0-057 ..... G-36
HP0-063 ..... G-36
HP0-067 ..... G-36
HP0-069 ..... G-36
HP0-073 ..... G-36
HP0-075 ..... G-36
HP0-078 ..... G-36
HP0-082 ..... G-36
HP0-090 ..... G-36
HP0-093 ..... G-36
HP0-098 ..... G-36
HP0-106 ..... G-36
HP0-110 ..... G-36
HP0-115 ..... G-36
HP0-125 ..... G-36
HP0-135 ..... G-36
HP0-145 ..... G-36
HP0-155 ..... G-36
HP0-165 ..... G-36
HP15-029 ..... G-37
HP15-038 ..... G-37
HP15-042 ..... G-37
HP15-047 ..... G-37
HP15-057 ..... G-37
HP15-063 ..... G-37
HP15-067 ..... G-37

HP15-069 ..... G-37
HP15-073 ..... G-37
HP15-078 ..... G-37
HPS0-018 ..... G-37
HPS0-025 ..... G-37
HPS0-029 ..... G-37
HPS0-033 ..... G-37
HPS0-038 ..... G-37
HPS0-042 ..... G-37
HPS0-046 ..... G-37
HPS0-052 ..... G-37
J55624 ..... D-14
J55681 ..... D-14
J55701 ..... E-5
J55702 ..... E-5
J55703 ..... E-8
J55704 ..... E-10
J55705 ..... C-6
J55706 ..... E-10
J55707 ..... E-10
J55708 ..... E-10
J55709 ..... E-10
J55710 ..... C-12
J55711 ..... E-10
J55712 ..... E-11
J55713 ..... E-11
J55714 ..... E-11
J55716 ..... E-11
J55717 ..... E-11
J55719 ..... E-6
J55720 ..... B-41
J55773 ..... B-51
J55775 ..... B-40, B-50
J55785 ..... H-6
J55789 ..... E-12
J55874 ..... C-18, C-19
J55878 ..... C-18, C-19
J56204 ..... C-35
J56366 ..... C-7, C-13
J56371 ..... C-25
J70315 ..... H-23
J70316 ..... H-23
J70317 ..... H-23
J70318 ..... H-23
J70321 ..... H-23
J70322 ..... H-23
J70323 ..... H-23
J70324 ..... H-23
J70326 ..... H-23
J70327 ..... H-23
J70377-M G-90
J70377-XL G-90
J70378-C G-90
J70378-F G-90
J70378-M G-90
J70380 ..... E-3
J70381 ..... E-3
J70382 ..... E-7
J70383 ..... E-7
J70384 ..... E-7
J70385 ..... E-7
J70386 ..... E-7
J70387 ..... E-7
J70388 ..... E-7
J70389 ..... E-7
J70390 ..... E-7
J70391 ..... E-7
J70392 ..... E-6
J70393 ..... E-9
J70413 ..... H-24
J70518 ..... C-9
J70633 ..... C-7, C-10, C-13
J70684 ..... B-55
J70804 ..... B-9, H-8
J70816 ..... C-7, C-11
J70914 ..... B-25, B-27
J70917 ..... C-35
JS2-018 ..... G-54
JS2-020 ..... G-54
JS2-022 ..... G-54
JS2-024 ..... G-54
JS2-026 ..... G-54
JS2-029 ..... G-54
JS2-032 ..... G-54
JS2-035 ..... G-54
JS2-038 ..... G-54
JS2-042 ..... G-54
JS2-047 ..... G-54
JS2-052 ..... G-54
JS2-057 ..... G-54
JS2-063 ..... G-54
JS2-069 ..... G-54
JS2-075 ..... G-54
JS2-082 ..... G-54
JS2-090 ..... G-54
JS2-098 ..... G-54
JS2-106 ..... G-54
JS2-115 ..... G-54
JS2-125 ..... G-54
JS2-135 ..... G-54
JS2-145 ..... G-54
JS2D-018 ..... G-55
JS2D-020 ..... G-55
JS2D-022 ..... G-55
JS2D-024 ..... G-55
JS2D-026 ..... G-55
JS2D-029 ..... G-55
JS2D-032 ..... G-55
JS2D-035 ..... G-55
JS2D-038 ..... G-55
JS2D-042 ..... G-55
JS2D-052 ..... G-55
JS2D-057 ..... G-55
JS2D-063 ..... G-55
JS2D-078 ..... G-55
JS2-PLUG G-54
JS4-018 ..... G-55
JS4-020 ..... G-55
JS4-022 ..... G-55
JS4-024 ..... G-55
JS4-026 ..... G-55
JS4-029 ..... G-55
JS4-032 ..... G-55
JS4-035 ..... G-55
JS4-038 ..... G-55
JS4-042 ..... G-55
JS4-047 ..... G-55
JS4-052 ..... G-55
JS4-057 ..... G-55
JS4-063 ..... G-55
JS4-069 ..... G-55
JS4-075 ..... G-55
JS4-082 ..... G-55
JS4-090 ..... G-55
JS4-098 ..... G-55
JS4-106 ..... G-55
JS4-115 ..... G-55
JS4-125 ..... G-55
JS4-135 ..... G-55
JS4-145 ..... G-55
JS4-155 ..... G-55
JS4-165 ..... G-55
JS4F-018 ..... G-56
JS4F-020 ..... G-56
JS4F-022 ..... G-56
JS4F-024 ..... G-56
JS4F-026 ..... G-56
JS4F-029 ..... G-56
JS4F-032 ..... G-56
JS4F-035 ..... G-56
JS4F-038 ..... G-56
JS4F-042 ..... G-56
JS4F-047 ..... G-56
JS4F-052 ..... G-56
JS4F-057 ..... G-56
JS4F-063 ..... G-56
JS4F-069 ..... G-56
JS4F-075 ..... G-56
JS4F-082 ..... G-56
JS4F-090 ..... G-56
JS4F-098 ..... G-56
JS4F-106 ..... G-56
JS4F-115 ..... G-56
JS4F-125 ..... G-56
JS4F-135 ..... G-56
JS4F-145 ..... G-56
JS4F-155 ..... G-56
JS4F-165 ..... G-56
JS4FD-032 ..... G-56
JS4FD-035 ..... G-56
JS4FD-038 ..... G-56

JS4FD-042 ..... G-56
JS4FD-047 ..... G-56
JS4FD-052 ..... G-56
JS4FD-057 ..... G-56
JS4FD-075 ..... G-56
JS4F-PLUG G-56
MP1 ..... G-86
MP2 ..... G-86
MP3 ..... G-86
MP4 ..... G-86
MS1 ..... G-87
MS2 ..... G-87
MS3 ..... G-87
OX-018 ..... G-3, G-49
OX-025 ..... G-3, G-49
OX-029 ..... G-3, G-49
OX-033 ..... G-3, G-49
OX-038 ..... G-3, G-49
OX-042 ..... G-3, G-49
OX-046 ..... G-3, G-49
OX-055 ..... G-49
P1-038 ..... G-49
P1-042 ..... G-49
P1-046 ..... G-49
P1-055 ..... G-49
P1-063 ..... G-49
P1-067 ..... G-49
P1-070 ..... G-49
P1-073 ..... G-49
P1-078 ..... G-49
P1S0-018 ..... G-57
P1S0-025 ..... G-57
P1S0-029 ..... G-57
P1S0-033 ..... G-57
P1S0-038 ..... G-57
P1S0-042 ..... G-57
P1S0-046 ..... G-57
P1S0-052 ..... G-57
P2TC-018 ..... G-53
P2TC-020 ..... G-53
P2TC-022 ..... G-53
P2TC-024 ..... G-53
P2TC-026 ..... G-53
P2TC-029 ..... G-53
P2TC-032 ..... G-53
P2TC-035 ..... G-53
P2TC-038 ..... G-53
P2TC-042 ..... G-53
P2TC-047 ..... G-53
P2TC-052 ..... G-53
P2TC-057 ..... G-53
P2TC-063 ..... G-53
P2TC-067 ..... G-53
P2TC-069 ..... G-53
P2TC-073 ..... G-53
P2TC-075 ..... G-53
P2TC-078 ..... G-53
P2TC-082 ..... G-53
P2TC-090 ..... G-53
P2TC-093 ..... G-53
P2TC-098 ..... G-53
P2TC-106 ..... G-53
P2TC-110 ..... G-53
P2TC-115 ..... G-53
P2TC-125 ..... G-53
P2TC-135 ..... G-53
P2TC-145 ..... G-53
P2TC-155 ..... G-53
P2TC-165 ..... G-53
P2TCS-018 ..... G-54
P2TCS-020 ..... G-54
P2TCS-022 ..... G-54
P2TCS-024 ..... G-54
P2TCS-026 ..... G-54
P2TCS-029 ..... G-54
P2TCS-032 ..... G-54
P2TCS-035 ..... G-54
P2TCS-038 ..... G-54
P2TCS-042 ..... G-54
P2TCS-047 ..... G-54
P2TCS-052 ..... G-54
P2TCS-057 ..... G-54
P2TCS-063 ..... G-54
P2TCS-067 ..... G-54
P2TCS-069 ..... G-54
P2TCS-073 ..... G-54
P2TCS-075 ..... G-54
P2TCS-078 ..... G-54
P2TCS-082 ..... G-54
P2TCS-090 ..... G-54
P2TCS-093 ..... G-54
P2TCS-098 ..... G-54
P2TCS-106 ..... G-54
P2TCS-110 ..... G-54
P2TCS-115 ..... G-54
P2TCS-125 ..... G-54
P4TC-018 ..... G-21, G-22, G-53
P4TC-020 ..... G-53
P4TC-022 ..... G-53
P4TC-024 ..... G-53
P4TC-025 ..... G-21, G-22
P4TC-026 ..... G-53
P4TC-029 ..... G-21, G-22, G-53
P4TC-032 ..... G-53
P4TC-033 ..... G-21, G-22
P4TC-035 ..... G-53
P4TC-038 ..... G-21, G-22, G-53
P4TC-042 ..... G-21, G-22, G-53
P4TC-046 ..... G-21, G-22
P4TC-047 ..... G-53
P4TC-052 ..... G-53
P4TC-055 ..... G-21, G-22
P4TC-057 ..... G-53
P4TC-063 ..... G-21, G-22, G-53
P4TC-067 ..... G-21, G-22, G-53
P4TC-069 ..... G-53
P4TC-070 ..... G-21, G-22
P4TC-073 ..... G-21, G-22, G-53
P4TC-075 ..... G-53
P4TC-078 ..... G-22, G-53
P4TC-081 ..... G-22
P4TC-082 ..... G-53
P4TC-089 ..... G-22
P4TC-090 ..... G-53
P4TC-093 ..... G-22, G-53
P4TC-098 ..... G-53
P4TC-106 ..... G-53
P4TC-110 ..... G-22, G-53
P4TC-115 ..... G-53
P4TC-125 ..... G-53
P4TC-135 ..... G-53
P4TC-145 ..... G-53
P4TC-155 ..... G-53
P4TC-165 ..... G-53
RM-018 ..... G-21, G-57
RM-020 ..... G-57
RM-022 ..... G-57
RM-024 ..... G-57
RM-025 ..... G-21, G-22
RM-026 ..... G-57
RM-029 ..... G-21, G-22, G-57
RM-032 ..... G-57
RM-033 ..... G-21, G-22
RM-035 ..... G-57
RM-038 ..... G-21, G-22, G-57
RM-042 ..... G-21, G-22, G-57
RM-046 ..... G-21, G-22
RM-047 ..... G-57
RM-052 ..... G-57
RM-055 ..... G-21, G-22
RM-057 ..... G-57
RM-063 ..... G-21, G-22, G-57
RM-067 ..... G-21, G-22, G-57
RM-069 ..... G-57
RM-070 ..... G-21, G-22
RM-073 ..... G-21, G-22, G-57
RM-075 ..... G-57
RM-078 ..... G-22, G-57
RM-081 ..... G-22
RM-082 ..... G-57
RM-089 ..... G-22
RM-090 ..... G-57
RM-093 ..... G-22, G-57
RM-098 ..... G-57
RM-106 ..... G-57
RM-110 ..... G-22, G-57
RM-115 ..... G-57
RM-125 ..... G-57
RM-135 ..... G-57
RM-145 ..... G-57
RM-155 ..... G-57

RM-165 ..... G-57
RMD-018 ..... G-23, G-58
RMD-025 ..... G-23, G-58
RMD-029 ..... G-23, G-58
RMD-033 ..... G-23, G-58
RMD-038 ..... G-23, G-58
RMD-042 ..... G-23, G-58
RMD-046 ..... G-23, G-58
RMD-052 ..... G-23
RMD-057 ..... G-58
RM-PLUG G-20, G-57
RMS-018 ..... G-23, G-58
RMS-025 ..... G-23, G-58
RMS-029 ..... G-23, G-58
RMS-033 ..... G-23, G-58
RMS-038 ..... G-23, G-58
RMS-042 ..... G-23, G-58
RMS-046 ..... G-23, G-58
RMS-052 ..... G-23, G-58
S137W-8-11-B C-2
S137W-8-11-S C-2
S137W-10-10-B C-2
S137W-10-10-S C-2
S137W-12-9-B C-2
S142H-5-15-S C-2
S142H-6-15-S C-2
S142H-6-16-S C-2
S142H-8-13-B C-2
S142H-8-13-S C-2
S142H-8-15-B C-2
S142H-8-15-S C-2
S142H-8-16-B C-2
S142H-8-16-S C-2
S142H-10-11-B C-2
S142H-10-11-S C-2
S142H-10-12-B C-2
S142H-10-12-S C-2
S142H-10-13-B C-2
S142H-10-13-S C-2
S142H-10-15-B C-2
S142H-10-15-S C-2
S142H-12-10-B C-2
S142H-12-10-S C-2
S142H-12-11-B C-2
S142H-12-11-S C-2
S142H-12-12-B C-2
S142H-12-12-S C-2
S142H-12-13-B C-2
S142H-12-13-S C-2
S142H-15-9-B C-2
S142H-15-9S C-2
S142H-15-10-B C-2
S142H-15-10-S C-2
S142H-15-11-B C-2
S142H-15-11-S C-2
S142H-15-12-B C-2
S142H-15-12-S C-2
S422-20-11-B C-2, C-3
S422-20-11-S C-2, C-3
S1300-6-11-B C-2
S1300-6-11-S C-2
S1300-8-10-B C-2
S1300-8-10-S C-2
S1300-8-11-B C-2
S1300-8-11-S C-2
S1300-10-9-B C-2
S1300-10-9-S C-2
S1300-10-10-B C-2
S1300-10-10-S C-2
S1300-12-8-B C-2
S1300-12-8-S C-2
S1300-12-9-B C-2
S1300-12-9-S C-2
S1300-15-7-B C-2
S1300-15-7-S C-2
S1300-15-8-B C-2
S1300-15-8-S C-2
S1301-6-11-S C-2
S1301-8-10-B C-2
S1301-8-10-S C-2
S1301-8-11-B C-2
S1301-8-11-S C-2
S1301-10-9-B C-2
S1301-10-9-S C-2
S1301-10-10-B C-2
S1301-12-8-B C-2
S1301-12-8-S C-2
S1301-15-7-S C-2
S1301-15-8-B C-2
S1301-15-8-S C-2
S1371-15-8-B C-2
S1371-15-8-S C-2
SP37W-8-11-B C-3
SP37W-8-11-S C-3
SP37W-10-10-B C-3
SP37W-10-10-S C-3
SP37W-12-9-B C-3
SP37W-12-9-S C-3
SP37W-15-8-B C-3
SP37W-15-8-S C-3
SP42H-5-15-S C-3
SP42H-6-15-S C-3
SP42H-6-16-S C-3
SP42H-6-18-B C-3
SP42H-8-13-B C-3
SP42H-8-13-S C-3
SP42H-8-15-B C-3
SP42H-8-15-S C-3
SP42H-8-16-B C-3
SP42H-8-16-S C-3
SP42H-10-11-B C-3
SP42H-10-11-S C-3
SP42H-10-12-B C-3
SP42H-10-12-S C-3
SP42H-10-13-B C-3
SP42H-10-13-S C-3
SP42H-10-15-B C-3
SP42H-10-15-S C-3
SP42H-12-10-B C-3
SP42H-12-10-S C-3
SP42H-12-11-B C-3
SP42H-12-11-S C-3
SP42H-12-12-B C-3
SP42H-12-12-S C-3
SP42H-12-13-B C-3
SP42H-12-13-S C-3
SP42H-15-9-B C-3
SP42H-15-9-S C-3
SP42H-15-10-B C-3
SP42H-15-10-S C-3
SP42H-15-11-B C-3
SP42H-15-11-S C-3
SP42H-15-12-B C-3
SP42H-15-12-S C-3
SP300-6-11-B C-3
SP300-6-11-S C-3
SP300-8-10-B C-3
SP300-8-10-S C-3
SP300-8-11-B C-3
SP300-8-11-S C-3
SP300-10-9-B C-3
SP300-10-9-S C-3
SP300-10-10-B C-3
SP300-10-10-S C-3
SP300-12-8-B C-3
SP300-12-8-S C-3
SP300-12-9-B C-3
SP300-12-9-S C-3
SP300-15-7-B C-3
SP300-15-7-S C-3
SP300-15-8-B C-3
SP300-15-8-S C-3
SP301-6-11-B C-3
SP301-6-11-S C-3
SP301-8-10-B C-3
SP301-8-10-S C-3
SP301-8-11-B C-3
SP301-8-11-S C-3
SP301-10-9-B C-3
SP301-10-9-S C-3
SP301-10-10-B C-3
SP301-10-11-S C-3
SP301-12-9-S C-3
SP301-15-7-B C-3
SP301-15-7-S C-3
SP301-15-8-B C-3
SP301-15-8-S C-3
SP301-15-9-B C-3
SP301-15-9-S C-3
SP371-15-8-B C-3
SP371-15-8-S C-3

SP421-5-15-S C-3
SP421-6-15-S C-3
SP421-8-13-B C-3
SP421-8-13-S C-3
SP421-8-15-B C-3
SP421-8-15-S C-3
SP421-10-11-B C-3
SP421-10-11-S C-3
SP421-10-12-B C-3
SP421-10-12-S C-3
SP421-10-13-B C-3
SP421-10-13-S C-3
SP421-10-15-B C-3
SP421-10-15-S C-3
SP421-12-10-B C-3
SP421-12-10-S C-3
SP421-12-11-B C-3
SP421-12-11-S C-3
SP421-12-12-B C-3
SP421-12-12-S C-3
SP421-12-13-B C-3
SP421-12-13-S C-3
SP421-15-9-B C-3
SP421-15-9-S C-3
SP421-15-10-B C-3
SP421-15-10-S C-3
SP421-15-11-B C-3
SP421-15-11-S C-3
SP421-15-12-B C-3
SP421-15-12-S C-3
TP4 ..... G-88
TP5 ..... G-88
TP6 ..... G-88
UHPX-005 ..... G-50
UHPX-006 ..... G-50
UHPX-007 ..... G-50
UHPX-008 ..... G-50
UHPX-009 ..... G-50
UHPX-010 ..... G-50
UHPX-011 ..... G-50
UHPX-012 ..... G-50
UHPX-013 ..... G-50
UHPX-014 ..... G-50
UHPX-015 ..... G-50
UHPX-016 ..... G-50
UHPX-017 ..... G-50
UHPX-018 ..... G-4, G-50
UHPX-019 ..... G-4, G-50
UHPX-020 ..... G-4, G-50
UHPX-021 ..... G-4, G-50
UHPX-022 ..... G-4, G-50
UHPX-023 ..... G-4, G-50
UHPX-024 ..... G-4, G-50
UHPX-025 ..... G-4, G-5, G-50
UHPX-026 ..... G-4, G-5, G-50
UHPX-027 ..... G-4, G-5, G-50
UHPX-028 ..... G-4, G-5, G-50
UHPX-029 ..... G-4, G-5, G-50
UHPX-030 ..... G-4, G-5, G-50
UHPX-031 ..... G-4, G-5, G-50
UHPX-032 ..... G-4, G-5, G-50
UHPX-033 ..... G-4, G-5, G-50
UHPX-034 ..... G-4, G-5, G-50
UHPX-035 ..... G-4, G-5, G-50
UHPX-036 ..... G-4, G-5, G-50
UHPX-037 ..... G-4, G-5, G-50
UHPX-038 ..... G-4, G-5, G-50
UHPX-039 ..... G-4, G-5, G-50
UHPX-040 ..... G-4, G-5, G-50
UHPX-042 ..... G-4, G-5, G-50
UHPX-046 ..... G-5, G-50
UHPX-052 ..... G-50
UHPX-067 ..... G-50
UHPXD-005 ..... G-51
UHPXD-006 ..... G-51
UHPXD-007 ..... G-51
UHPXD-008 ..... G-51
UHPXD-009 ..... G-51
UHPXD-010 ..... G-51
UHPXD-011 ..... G-51
UHPXD-012 ..... G-51
UHPXD-013 ..... G-51
UHPXD-014 ..... G-51
UHPXD-015 ..... G-51
UHPXD-016 ..... G-51
UHPXD-017 ..... G-51
UHPXD-018 ..... G-4, G-51
UHPXD-019 ..... G-4, G-51
UHPXD-020 ..... G-4, G-51
UHPXD-021 ..... G-4, G-51
UHPXD-022 ..... G-4, G-51
UHPXD-023 ..... G-4, G-51
UHPXD-024 ..... G-4, G-51
UHPXD-025 ..... G-4, G-5, G-51
UHPXD-026 ..... G-4, G-5, G-51
UHPXD-027 ..... G-4, G-5, G-51
UHPXD-028 ..... G-4, G-5, G-51
UHPXD-029 ..... G-4, G-5, G-51
UHPXD-030 ..... G-4, G-5, G-51
UHPXD-031 ..... G-4, G-5, G-51
UHPXD-032 ..... G-4, G-5, G-51
UHPXD-033 ..... G-4, G-5, G-51
UHPXD-034 ..... G-4, G-5, G-51
UHPXD-035 ..... G-4, G-5, G-51
UHPXD-036 ..... G-4, G-5, G-51
UHPXD-037 ..... G-4, G-5, G-51
UHPXD-038 ..... G-4, G-5, G-51
UHPXD-039 ..... G-4, G-5, G-51
UHPXD-040 ..... G-4, G-5, G-51
UHPXD-042 ..... G-4, G-5, G-51
UHPXD-046 ..... G-5, G-51
UHPXD-052 ..... G-51
UHPXD-067 ..... G-51
UHPXi-005 ..... G-52
UHPXi-006 ..... G-52
UHPXi-007 ..... G-52
UHPXi-008 ..... G-52
UHPXi-009 ..... G-52
UHPXi-010 ..... G-52
UHPXi-011 ..... G-52
UHPXi-012 ..... G-52
UHPXi-013 ..... G-52
UHPXi-014 ..... G-52
UHPXi-015 ..... G-52
UHPXi-016 ..... G-52
UHPXi-017 ..... G-52
UHPXi-018 ..... G-4, G-52
UHPXi-019 ..... G-4, G-52
UHPXi-020 ..... G-4, G-52
UHPXi-021 ..... G-4, G-52
UHPXi-022 ..... G-4, G-52
UHPXi-023 ..... G-4, G-52
UHPXi-024 ..... G-4, G-52
UHPXi-025 ..... G-4, G-5, G-52
UHPXi-026 ..... G-4, G-5, G-52
UHPXi-027 ..... G-4, G-5, G-52
UHPXi-028 ..... G-4, G-5, G-52
UHPXi-029 ..... G-4, G-5, G-52
UHPXi-030 ..... G-4, G-5, G-52
UHPXi-031 ..... G-4, G-5, G-52
UHPXi-032 ..... G-4, G-5, G-52
UHPXi-033 ..... G-4, G-5, G-52
UHPXi-034 ..... G-4, G-5, G-52
UHPXi-035 ..... G-4, G-5, G-52
UHPXi-036 ..... G-4, G-5, G-52
UHPXi-037 ..... G-4, G-5, G-52
UHPXi-038 ..... G-4, G-5, G-52
UHPXi-039 ..... G-4, G-5, G-52
UHPXi-040 ..... G-4, G-5, G-52
UHPXi-042 ..... G-4, G-5, G-52
UHPXi-046 ..... G-5, G-52
UHPXi-052 ..... G-52
UHPXi-067 ..... G-52
UHPX-PLUG G-2

PRODUCTS

A

Abrasive Pot, G-90
Abrasives, G-90
MaxxStrip Magnesium Sulphate/ Kieserite, G-90
Sharpjet Garnet, G-90
Sofstrip Sodium Bicarbonate, G-90
Anti-Seize, Thread Lubricant, E-1
Automated Waterblasting Solutions, A-5

B

Blue Goop Thread Lubricant, E-1
Boots, H-19
Burst Discs, C-38
Bypass Valve, B-27

C

Cartridges
Bypass Valve, B-27
C-15 Dump, F-2
CPSi-15 Shut-In, C-12, F-8
Hydro-Throttle Cartridge, C-25, C-26
Regulator Valve Long Handle (Dump Style), C-22
Uni-Valve, B-23, B-26, B-27, B-33, B-35, B-37, B-39, B-45, B-47, B-49, B-51, B-53, B-55, B-57, B-61, B-63, B-65, B-67, B-69, B-73, B-77, B-79, B-83, B-87, B-89, B-91, B-95
Centralizers, H-9
Cage Style, G-25, G-29, G-31, H-10, H-11
Scissor Style, G-26, G-29, H-11
Skid Style, G-25, G-29, H-9
Connection Types, I-2
British Standard Pipe (BSPP), I-6
Jetstream HHP Male Adapters, I-4
Medium Pressure (MP), I-7
Metric, I-5
Pipe Threads (NPT), I-2
Straight Boss, I-6
Type M, I-4
Medium Pressure (MP), I-7
Control Guns
Durasafe Foot Guns, F-11
Dump Style, F-11
Shut-In Style, F-12
Durasafe Hand Guns
Dump Style, F-2
Field Repairable, F-5
Partially Field Repairable, F-4
Welded, F-3
Zero-Thrust Hand Gun, F-7
Shut-In Style, F-8
Field Repairable, F-10
Welded, F-9
Cooler Tube, Vortex, H-19
Custom Units, A-3

D

Dessicant Breather, C-36
Diesel Units, A-1, A-2, A-3
DrillJet, G-63
DVD, Pump Operation and Maintenance, C-5

E

Electric Units, A-3
Extensions
Gauge Extension, E-2

F

Face Shield, H-23
Filters
Bags, C-35
Guardian System, C-35
Standard Filters, C-35
Fittings, E-1
Anti-Vibration, E-21
Couplings, E-5
Pipe Thread (NPT), E-5
Quick Connect, E-2
Screw Type, E-3
Twis-Lok, E-2
Crosses, E-3
Dual Lance Manifolds, E-9
Elbows, E-4
Hammer Unions, E-5
Hex Nipples, E-7
High Pressure, E-2
High Pressure HHP Male To Type M Male Adapters, E-2
Jetstream HF Male Adapters, E-14
Clockable Adapter Fittings, E-15
Plug, E-15
to Female NPT, E-15
to Metric Male, E-15
to Pipe Thread Male (NPT), E-14
to Type M Male, E-14
Jetstream HHP Male Adapters, E-16
Clockable Adapter Fittings, E-17
Fittings, E-17
Plug, E-16
to Medium Pressure Female, E-16
to Metric Female, E-17
to Metric Male, E-16
to Pipe Thread Male (NPT), E-16
to Type M Male, E-16
Medium Pressure Anti-Vibration Gland Assemblies, E-21
Medium Pressure Connections, E-17
Crosses, E-17
Elbows, E-18
Male-to-Female, E-19
Male-to-Male, E-19
Straight Couplings, E-18
Tees, E-18
Union Couplings, E-19
Medium Pressure Gland Nuts, Collars and Plugs, E-20
Medium Pressure Nipples, E-20
Medium Pressure Slimline Lance Couplings, E-21
Nipples, E-8
Plugs, E-8
Pressure Conversion, E-10
Pipe Thread Female (NPT Female)
to British Standard Pipe (BSPP) Male Adapters, E-12
to High Pressure Male Adapter, E-12
to Medium Pressure Female Adapters, E-11
to Medium Pressure Male Adapters, E-11
to Metric Male Adapters, E-13
to Type M Male Adapters, E-10
Pipe Thread Male (NPT Male)
to British Standard Pipe (BSPP) Male Adapters, E-12
to Medium Pressure Female Adapters, E-11
to Medium Pressure Male Adapters, E-10
to Metric Male Adapters, E-12
to Type M Male Adapters, E-10
Type M Male Connectors, E-13
to Medium Pressure Male, E-14
Reducing Bushings, E-6
Rigid Lance Adapters, E-9
RotoLink™, E-22
Straight Boss Plugs, E-9
Tees, E-4
Y-Fittings, E-9

Flex Lances
Safety Grip, H-6
FlexStop, H-7
Foot Protection
Shin & Foot Guards, H-23
TST Boots 3000, H-19

G

Gaiters, H-19
Gauge Accessories
Gauge Adapter, E-2
Gauge Extension, E-2
Gauge Adapter, C-37
Gauge Extension, C-37
Gauges
Belt Tension, C-5
Gauge Adapter, C-37
Gauge Extension, C-37
Pressure, C-37
Gear Drive, B-1, B-2, B-11, B-14, B-18, B-21
Gloves
TST Pro-Operator Gloves, H-21, H-22
Grease Remover, TST, H-19
Guardian Tank Fill Valve Assembly, C-36

H

H3Orbiter, G-30
Accessories
Centralizer, G-31
Tow Ring, G-31
Manifolds, G-31
Hard Hats, H-23
HHD Nozzles, G-48
HHS0 Nozzles, G-48
HHTC Nozzles, G-47
High Pressure, E-2
Hose
Hose Connection Cover, H-4
Hose Shrouds, TST, H-4
Safety Hose Checks, H-5
Strain Relief Hose, H-4
Hose Checks, H-5
Hoses
Rubber Waterblast, D-2
Custom Order, D-3
Thermoplastic, D-4
Custom Order, D-6
End Fittings, D-7
BSP Female, D-8
Metric Female, D-8
NPT Female, D-7
NPT Male, D-7
Type M Female, D-8
Hoses and Lances
Flow Data
SteelFlex™ Lances, D-24
Pressure Drop Data, D-15
Rigid Lances, D-21, D-22, D-23
Rubber Waterblast Hoses, D-17
Stainless Steel Braided Flex Lances, D-20
Thermoplastic Hoses & Flex Lances, D-18, D-19
Hoses & Lances, D-1
HydroForce Units, A-3
Hydrostatic Test Valve (HTV), C-30–C-31
Hydrostatic Test Valve (HTV) for Use With Foot Valve, C-32
Hydro-Throttle
Electronic, C-25
Mechanical, C-26

J

J-Force Series
2” J-Force, G-6
3” J-Force, G-8
4” J-Force Gen III, G-12
6” J-Force, G-16
JS2D Pipe Cleaning Nozzles, G-55
JS4FD Pipe Cleaning Nozzles, G-56

K

Kick Plate Assembly, G-31

L

Lances
Rigid, D-13
Machine Screw Thread Male x Machine Screw Thread Female, D-14
NPT Male x .56JS Lance Male, D-14
NPT Male x .56MP Male, D-14
NPT Male x Machine Screw Thread Female, D-14
NPT Male x NPT Female, D-13
NPT Male x NPT Male, D-13
Stainless Steel Braided Flex, D-9
End Fittings, D-10
Machine Screw Thread Female, D-10
Machine Screw Thread Male, D-10
Mini-Mole, D-11
NPT Male, D-10
SteelFlex™, D-12
Thermoplastic Flex, D-5
Custom Order, D-6
End Fittings, D-7
BSP Female, D-8
Metric Female, D-8
NPT Female, D-7
NPT Male, D-7
Type M Female, D-8
Lubricants
Thread, E-1

M

Multi-Gun Valve (MGV), C-27
Multi-Unit Manifolds (MUM), C-29

N

Nozzles
Abrasive Injector Nozzle, G-89
Carbide Orifices
HHTC Series, G-44, G-45, G-47
OX Series, G-3, G-46
P2TC Series, G-44, G-45, G-53
P2TCS Series, G-54
P4TC Series, G-44, G-45, G-53
RM Series, G-21, G-44, G-45
HP Surface Cleaning Nozzles, G-36
Nozzle Number Cross-Reference Chart, G-46
Orbi-Jet X22, G-2
UHPX/UHPXi/UHPXD Series Nozzles, G-4
Pipe Cleaning, G-59
RotoMag X22, G-20
2-D Pipe Cleaning Nozzle, G-20
RMS Series Sapphire Nozzles, G-23
Sapphire Orifices
HHS0 Series, G-40, G-41
P1S0 Series, G-40, G-41, G-57
RMS Series, G-23, G-40, G-41
Spool Nozzles, G-90
Stainless Steel Orifices
JS2 Series, G-43, G-54
JS4F Series, G-44, G-45, G-56
JS4 Series, G-44, G-45, G-55
P1 Series, G-43, G-49
Swivel X15, G-27
Tube Cleaning, G-63, G-65

Accessories, G-79
C Series, G-69, G-79
E Series, G-70, G-82
EX Series, G-70, G-84
FB Series, G-73, G-75
FM7 Series, G-73, G-75
FPC Series, G-68, G-78
FP Series, G-68, G-77
FPT Series, G-69, G-81
MP Series, G-71, G-86
MS Series, G-71, G-87
Selection & Part Numbering, G-67
TP Series Thrusters, G-72, G-88
Tube Spinner, G-65
Nozzle Shut-Off Valve (NSOV), C-34

O

Oil Seal Puller Plates, C-4
Orbi-Jet X22, G-2
Orifice Group A, G-40, G-41
Orifice Group B, G-43
Orifice Group C, G-44, G-45
OX Nozzles, G-49
OX Series Carbide Orifices, G-46

P

Pipe Cleaning Tool
H3Orbiter, G-30
RotoMag X22, G-20
Swivel X15, G-27
Pressure Gauges, C-37
Pump Accessories
20K Check Valve, C-33
Bypass Valves, C-16
Dessicant Breather, C-36
Diverter Valves, C-6
Guardian Tank Fill Valve Assembly, C-36
Hydrostatic Test Valve (HTV), C-30
Hydro-Throttles, C-25
Multi-Gun Valve (MGV), C-27
Multi-Unit Manifolds (MUM), C-29
Nozzle Shut-Off Valve, C-34
Pressure Gauges, C-37
Regulator Valves, C-18
Rupture Disc Holders, C-38
Burst Discs, C-38
Severe Service Relief Valve, C-28
Standard Filters, C-35
Filter Bags, C-35
Thread Lubricants, E-1
Tools
1/4” T-Wrench (Hex Key), C-5
3/16” T-Wrench (Hex Key), C-5
Belt Tension Gauges, C-5
Gland Nut Tool, C-5
Manifold Mounting Studs, C-4
Oil Seal Puller Plates, C-4
O-Ring Pick, C-5
Pump Operation and Maintenance DVD, C-5
Valve Puller, C-5
UNx Fluid End Spare Parts Packages, C-2

R

Rain Suits, H-23
Replacement Parts
Safety Shrouds, H-3
RMD Pipe Cleaning Nozzles, G-58
RM / P4TC Series—Carbide Nozzles, G-21
RM Pipe Cleaning Nozzles, G-57
RMS Pipe Cleaning Nozzles, G-58
RotoLink, E-22
RotoMag X22, G-20
Accessories
Centralizers, G-25
Nozzle Extensions, G-24
Nozzle Plugs, G-24
The Warden, G-26
Rupture Disc Holders
Burst Discs, C-38

S

Safety
Caution Sign, H-24
Covered Safety Whips, H-4
Decal, H-24
Flex Lance Safety Grip, H-6
Safety Accessories
Boots, H-23
Ear Plugs, H-23
Face Shield, H-23
Goggles, H-23
Hard Hat, H-23
Shin & Foot Guards, H-23
Water Protection Suits, H-23
Safety Apparel
TST Alfa Kit, H-16
TST Apron, H-19
TST Balaclava, H-19
TST Boots 3000, H-19
TST Delta Kit, H-17
TST Gaiters, H-19
TST Gamma Kit, H-16
TST Hand Protection, H-19
TST Jacket, H-18
TST Overall, H-18
TST Pro-Operator Gloves, H-21, H-22
TST Sigma Kit, H-17
TST Trousers, H-17, H-20, H-21
TST Waistcoat, H-18
TST Waistcoat w/Apron, H-19
TST Waterjet Protection, H-16
Turtleskin Waterarmor, H-22
Safety Grip Accessories, H-6
Lance Stop Retainers, H-6
Lance Stops, H-6
Safety Grip Shield, H-6
Safety Hose Checks, H-5
Shrouds, H-3
Sign, H-24
Tape, H-24
TST Grease Remover, H-19
TST Hose Shrouds, H-4
Vortex Cooler Tube, H-19
Warning Sticker, H-24
Safety Glasses, H-23
Safety Grip, Flex Lance, H-6
Safety Shrouds, H-3
TST Hose Shrouds, H-4
Safety Tape, Signs And Decals, H-24
Safety Whips, Covered, H-4
Severe Service Relief Valve, C-28
Shin & Foot Guards, H-23
Shin Protection, H-23
Shroud Safety, H-3
Signs, H-24
Sonetics® Apex Wireless Headset, H-14
Standard Filters, C-35
Filter Bags, C-35
Surface Cleaning Tools
Orbi-Jet X22, G-2
Swivel X15, G-27

T

Technical, I-1
The Warden, H-8
Thread Lubricants, E-1
Tools
1/4” T-Wrench (Hex Key), C-5
3/16” T-Wrench (Hex Key), C-5
Belt Tension Gauges, C-5
Gland Nut Tool, C-5
Manifold Mounting Studs, C-4
Oil Seal Puller Plates, C-4
O-Ring Pick, C-5
Pump Operation And Maintenance DVD, C-5
Pump Wrenches, C-4
Valve Puller, C-5
Tow Rings, G-24

Training, A-4
Additional Tools
Jetstream Safety Manual, A-4
Online with Federal Signal ESG University, A-4
Pump Operation & Maintenance, A-4
Right Start Program, A-4
Safety - FS Solutions, A-4
TST Workplace Safety Solutions, H-15
WSS Operator Booth, H-15
WSS Protective Curtain, H-15
WSS Protective Wall, H-15
WSS Protective Wall Connecting Panel, H-15
WSS Scuffguard, H-15
Tube Spinner, G-65
Turtleskin Waterarmor, H-22
TwinForce™ Units, A-1

U

UHPXD Nozzles, G-51
UHPXi Nozzles, G-52
UHPX Nozzles, G-50
Unit Conversions & Formulas, I-1
Units, A-1
6000 Series, A-2
Custom, A-3
Electric, A-3
HydroForce, A-3
TwinForce, A-1
X-Series, A-2
UNx Bareshaft Pumps
Model 3015, B-20
Model 3615HF, B-16
Model 4215HF, B-13, B-16
Model 5220, B-5
UNx Fluid End
Spare Parts Packages, C-2
UNx Fluid Ends
Features & Benefits, B-23, B-40

V

Valves
20K Check Valve, C-33
Bypass, B-27
Hand Adjustable, C-16
Diverter
Dump Style
Air-Operated, C-6
Electric/Air-Operated, C-8
Hydraulic-Operated, C-10
Shut-In Style
Air-Operated, C-12
Electric/Air-Operated, C-14
Guardian Tank Fill Valve Assembly, C-36
Hydrostatic Test Valve (HTV), C-30–C-31
Multi-Gun Valve (MGV), C-27
Nozzle Shut-Off Valve (NSOV), C-34
Regulator
Long Handle (Dump Style), C-22
Shut-In
Air-Operated, C-20
Hand Adjustable, C-18
Severe Service Relief Valve, C-28
Uni-Valve, B-23, B-26, B-27, B-33, B-35, B-37, B-39, B-45, B-47, B-49, B-51, B-53, B-55, B-57, B-61, B-63, B-65, B-67, B-69, B-73, B-77, B-79, B-83, B-87, B-89, B-91, B-95
Videos
Maintenance DVD, C-5
Visual Safety System, H-2

W

Whips
Covered Safety, H-4

X

X-Series Units, A-2

Jetstream®

Subsidiary of Federal Signal Corporation

Streator, IL
(815) 672-6028

Toledo, OH
(888) 415-7368

New Brunswick, NJ
(732) 448-7830

Highland, IN
(219) 924-3180

Lexington, SC
(803) 996-0741

Leeds, AL
(800) 822-8785

Williston, ND
(701) 572-7421

La Porte, TX
(281) 674-8668

Gonzales, LA
(225) 647-0660

Midland, TX
(432) 563-4450

Salt Lake City, UT
(801) 808-4590

Long Beach, CA
(866) 515-9891

Lakewood, WA
(253) 584-0653

Jetstream has the most comprehensive products, service, rental, and training in the industry. Whether you are looking to purchase or rent water blasting equipment, or if you need service and support for your existing equipment, we've got you covered with the most experienced and customer-focused team in the industry.

In the United States, our products are serviced by FS Solutions. With 13 convenient locations, FS Solutions provides high-performance parts and accessories, Jetstream rentals, repair and rebuild, and safety training services. In Canada, Joe Johnson Equipment (JJE) is there to handle your every need.

Jetstream is a subsidiary of Federal Signal Corporation and has the financial strength, backing, and network of distributors around the world to support any customer.

INTERNATIONAL DISTRIBUTORS

Santiago, Chile
Orbitec

Glasgow, Scotand
Powerjet Rentals

Dubai, UAE
Asia Waterjet

Johannesburg, South Africa
Total Blasting

Adelaide, Australia
Metco

Shanghai, China
FS Asia

Singapore
Asia Waterjet

JETSTREAM OF HOUSTON

5905 THOMAS ROAD
HOUSTON, TEXAS 77041

(832) 590-1300

(800) 231-8192

FS Solutions®

P/N J70394-E-4 Effective 08/19/22
© 2022 Jetstream of Houston, LLC. All rights reserved.

Federal Signal Corporation is listed on the NYSE by the symbol FSS.
Specifications and equipment listed are subject to change without notice.
Some photos are shown with optional equipment.